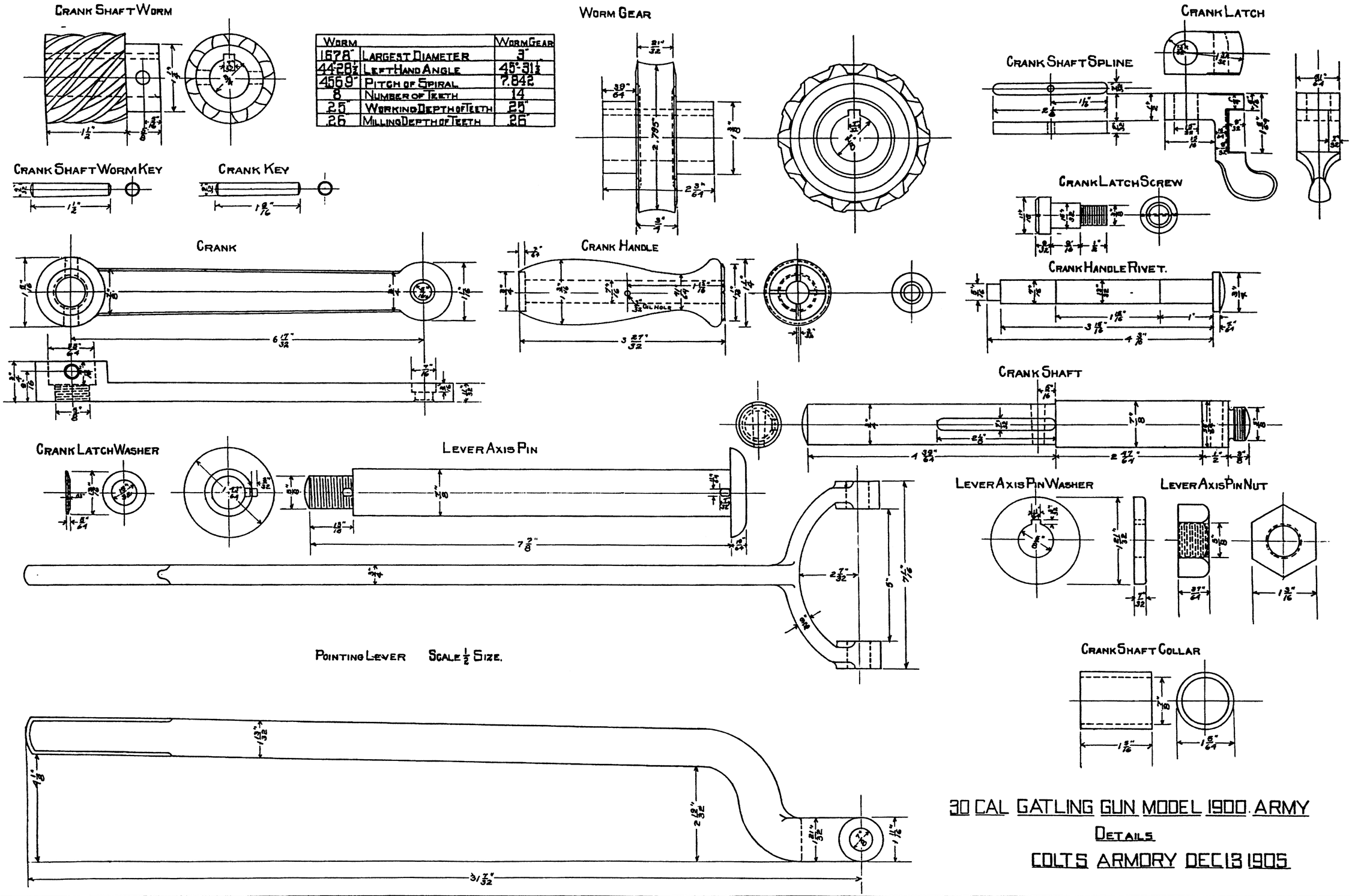

Worm		Worm Gear
1.678"	Largest Diameter	3"
44°28½'	Left Hand Angle	45°-31½'
4.569"	Pitch of Spiral	7.842
8	Number of Teeth	14
.25"	Working Depth of Teeth	.25"
.26	Milling Depth of Teeth	.26"

30 CAL GATLING GUN MODEL 1900. ARMY

Details

COLTS ARMORY DEC 13 1905

NO ASSM. DWG. IN SET: SEE HANDBOOK OF THE GATLING GUN, CALIBER .30, PUBL. NO. 36, ANTIQUE ORDNANCE PUBL., BOX 610434, 3611 OLD FARM LANE, PORT HURON, MI 48060 (TEL: 1-313-982-1052)

Checked OK

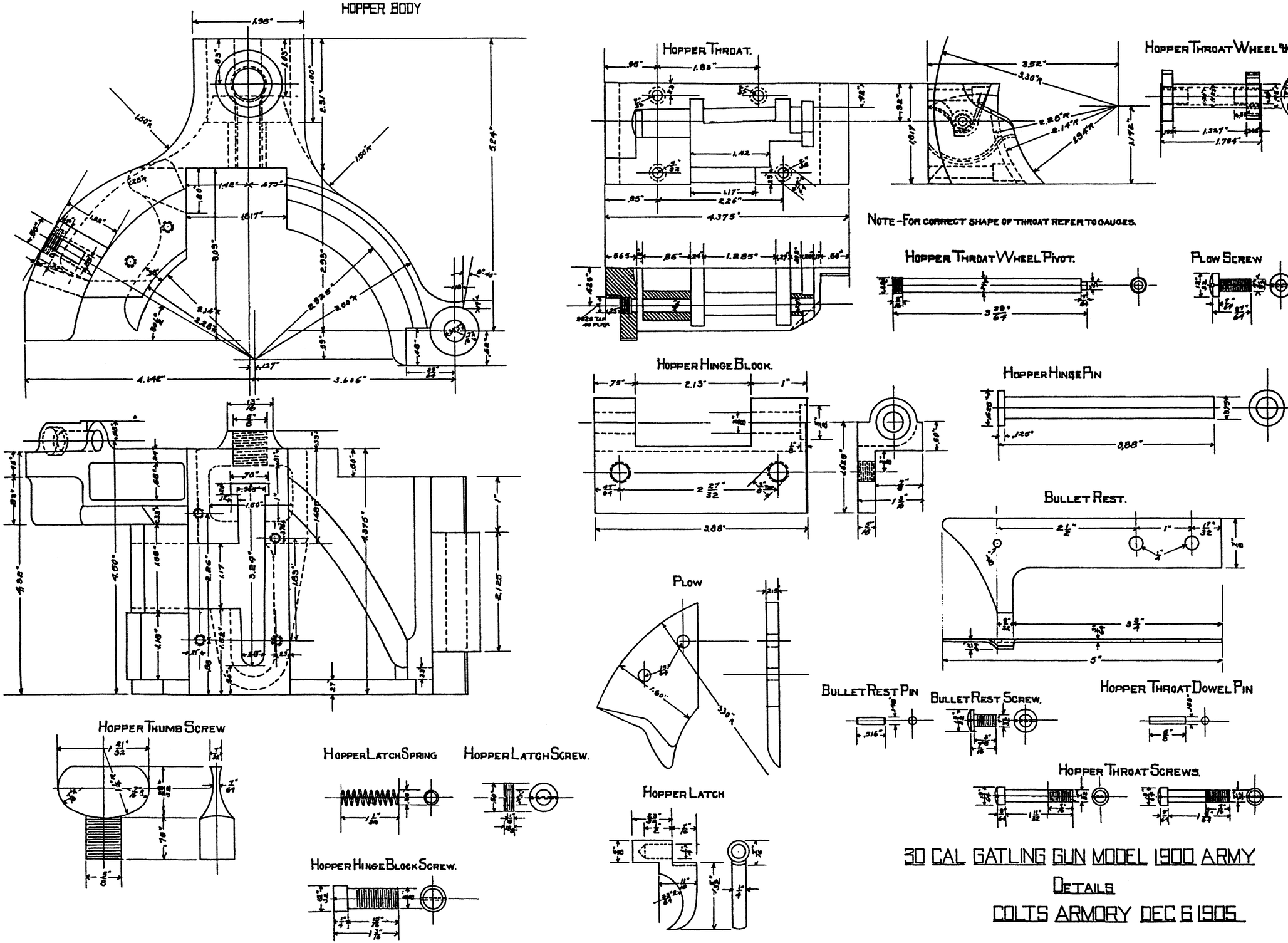

30 CAL GATLING GUN MODEL 1900 ARMY

DETAILS

COLTS ARMORY DEC 6 1905

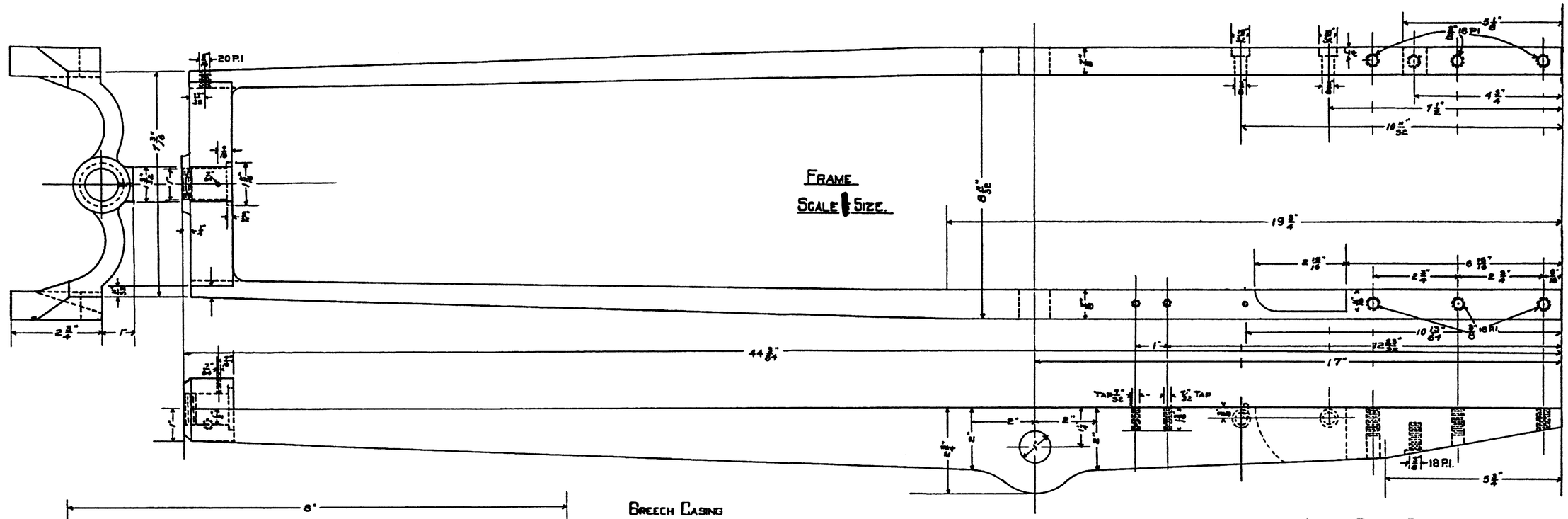

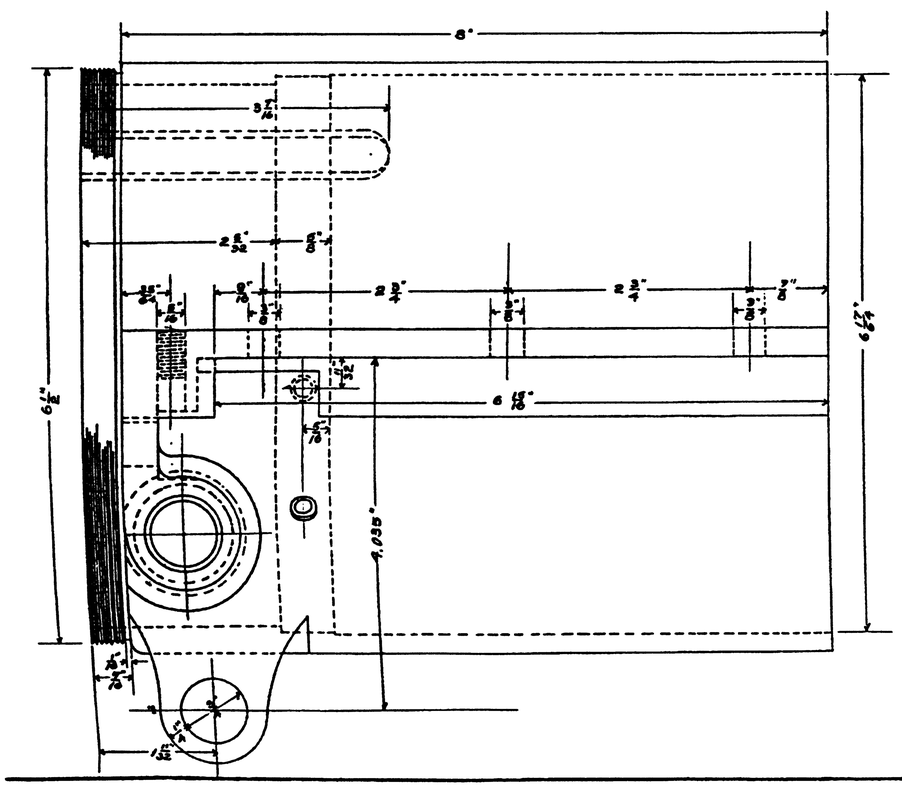

BREECH CASING

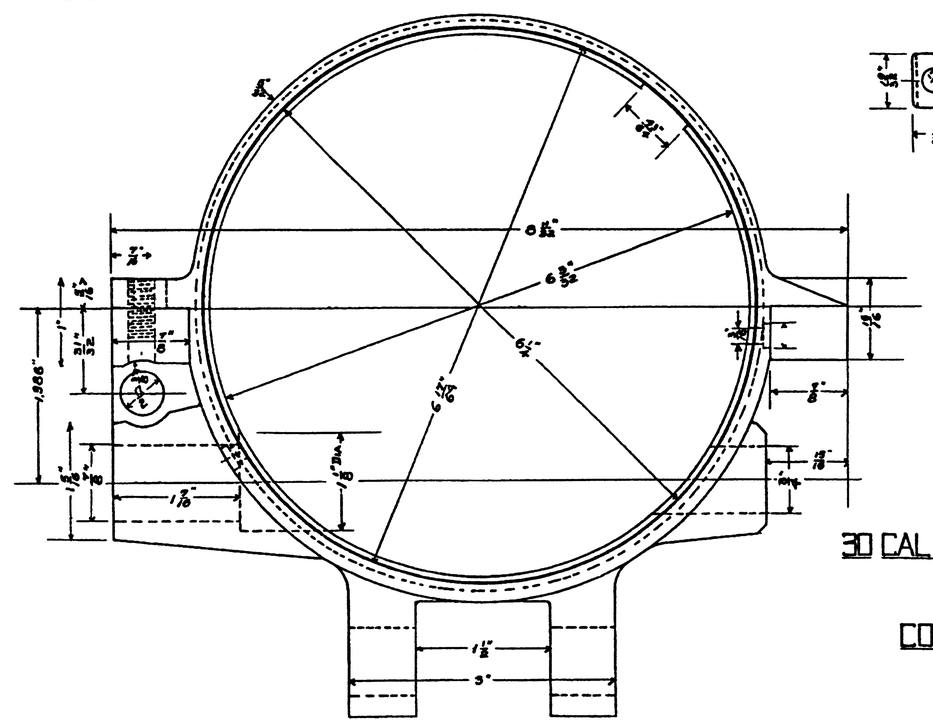

BREECH CASING SCREW

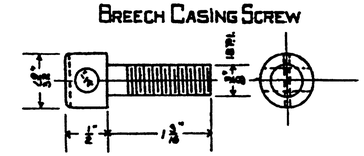

30 CAL. GATLING GUN MODEL 1900 ARMY

DETAILS

COLTS ARMORY DEC. 2 1905

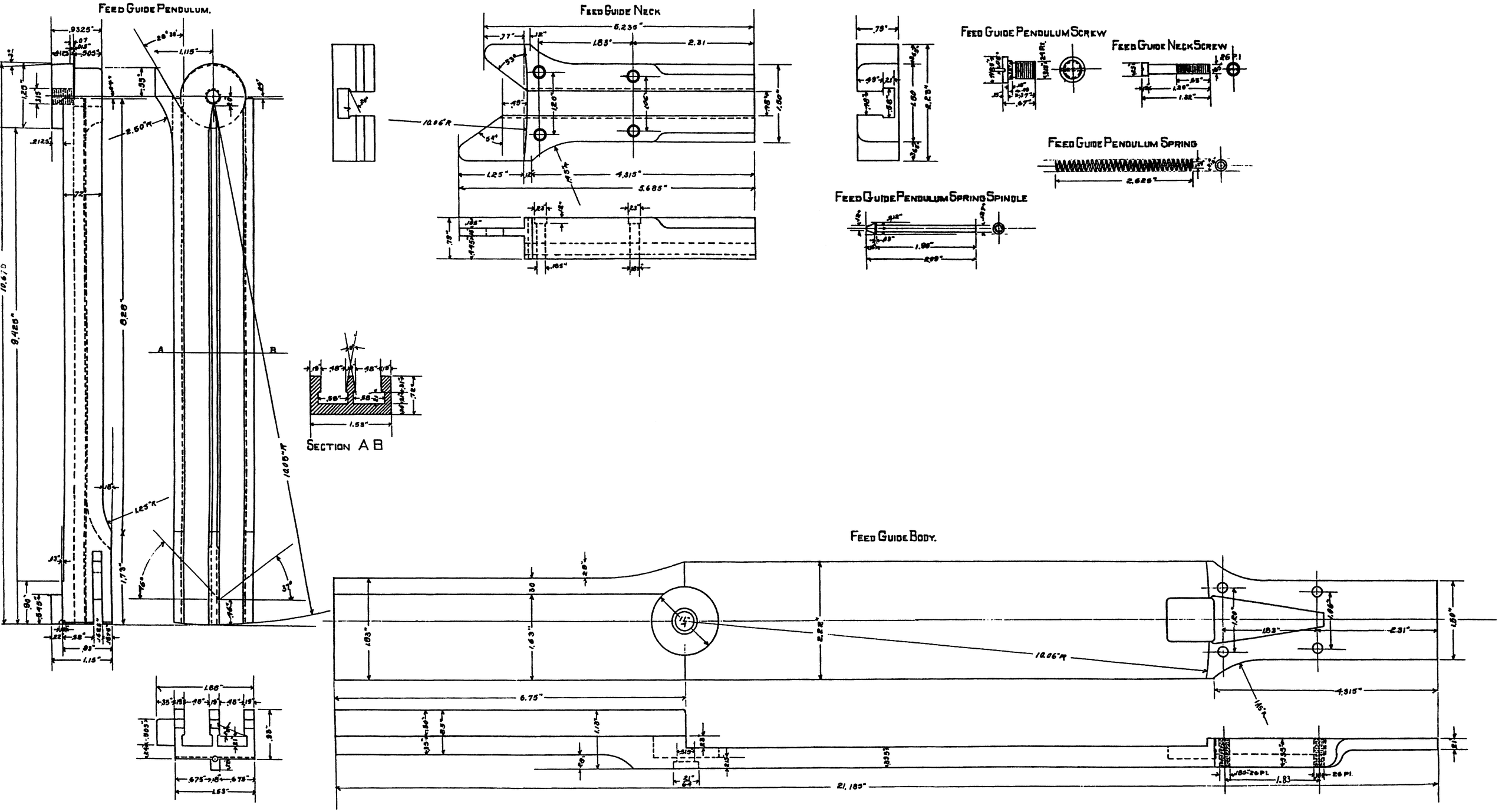

30 CAL GATLING GUN MODEL 1900 ARMY

Details

COLTS ARMORY DEC 13 1905.

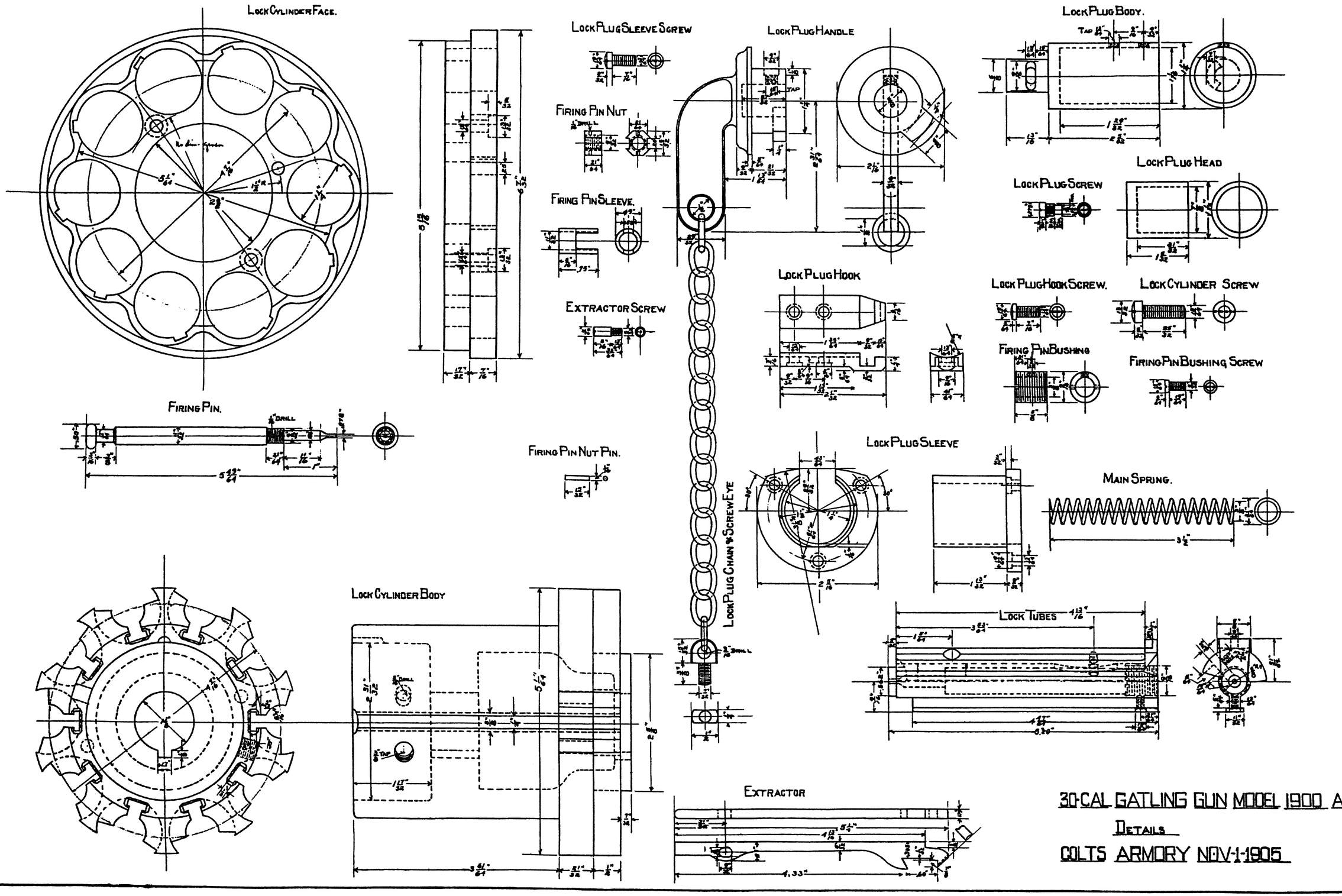
Lock Cylinder Face.
Lock Plug Sleeve Screw
Lock Plug Handle
Lock Plug Body.
Firing Pin Nut
Firing Pin Sleeve.
Extractor Screw
Lock Plug Head
Lock Plug Screw
Lock Plug Hook
Lock Plug Hook Screw.
Lock Cylinder Screw
Firing Pin Bushing
Firing Pin Bushing Screw
Firing Pin.
Firing Pin Nut Pin.
Lock Plug Sleeve
Main Spring.
Lock Plug Chain & Screw Eye
Lock Cylinder Body
Lock Tubes
Extractor
30-CAL GATLING GUN MODEL 1900 ARMY
Details
COLTS ARMORY NOV-1-1905

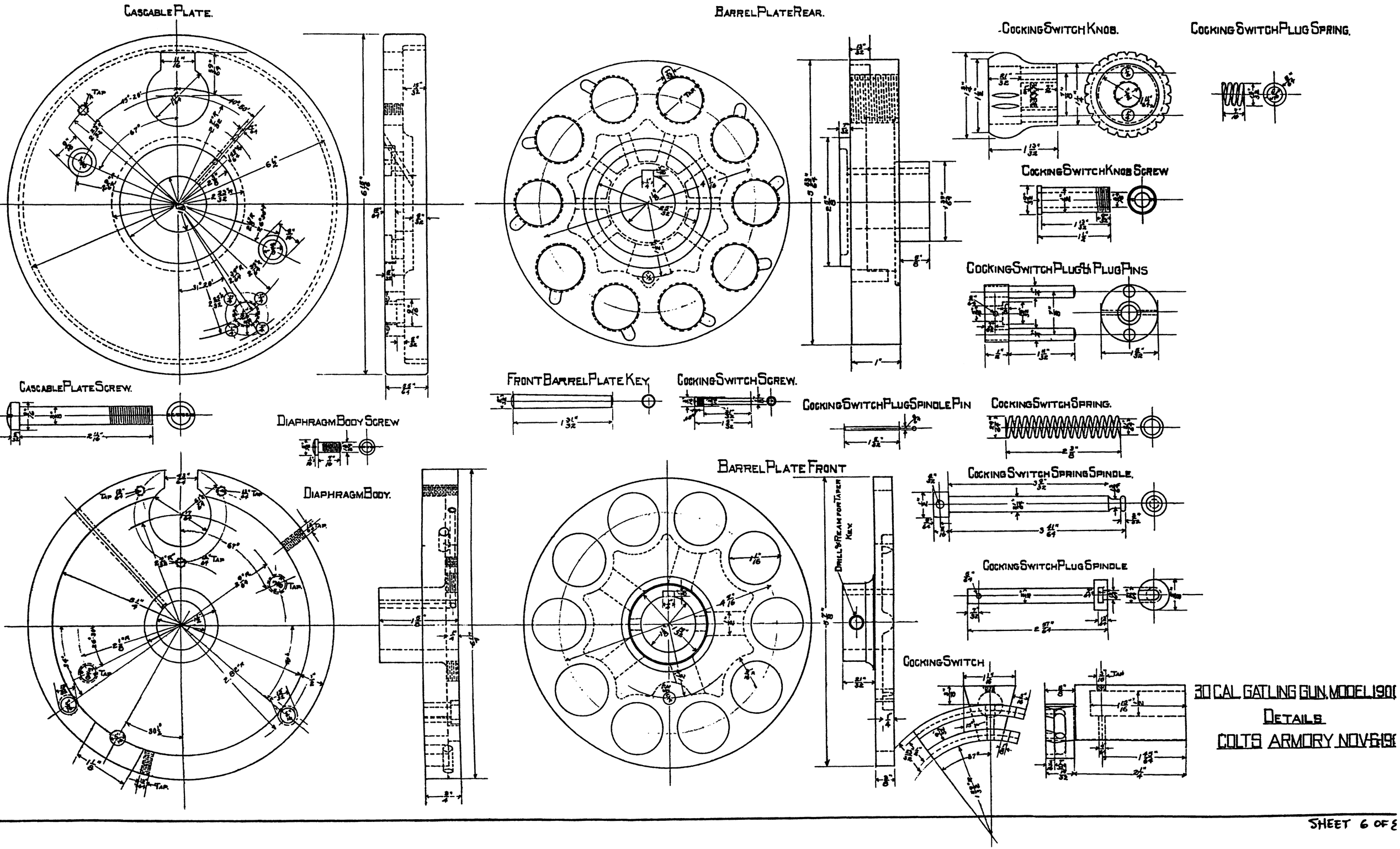
Cascable Plate.
Barrel Plate Rear.
Cocking Switch Knob.
Cocking Switch Plug Spring.
Cocking Switch Knob Screw
Cocking Switch Plug & Plug Pins
Cascable Plate Screw.
Front Barrel Plate Key
Cocking Switch Screw.
Cocking Switch Plug Spindle Pin
Cocking Switch Spring.
Diaphragm Body Screw
Diaphragm Body.
Barrel Plate Front
Drill & Ream for Taper Key
Cocking Switch Spring Spindle.
Cocking Switch Plug Spindle
Cocking Switch
30 CAL. GATLING GUN, MODEL 1901
Details
COLTS ARMORY NOV 6 1901
SHEET 6 OF 8

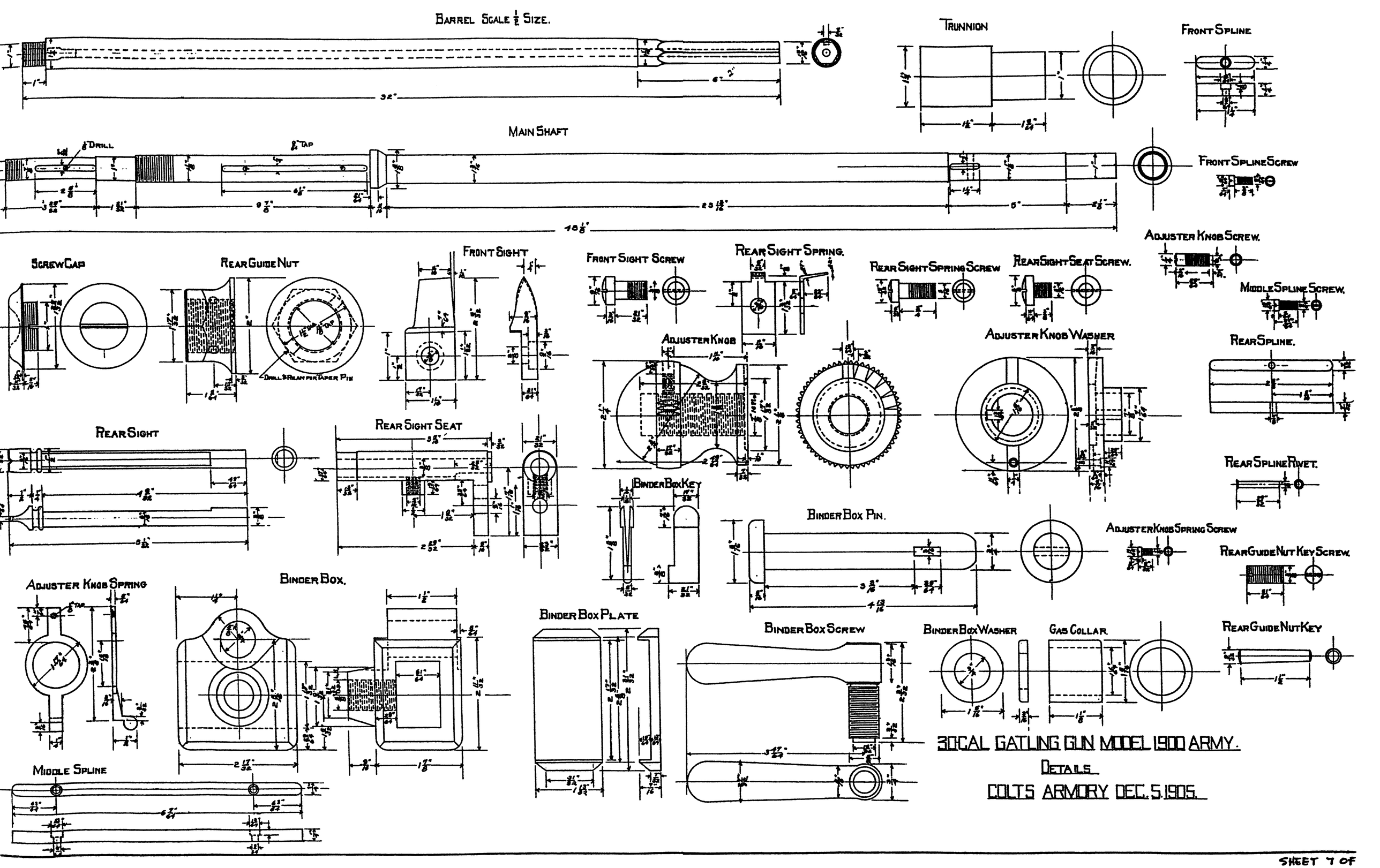

30 CAL GATLING GUN MODEL 1900 ARMY.

DETAILS

COLTS ARMORY DEC. 5. 1905.

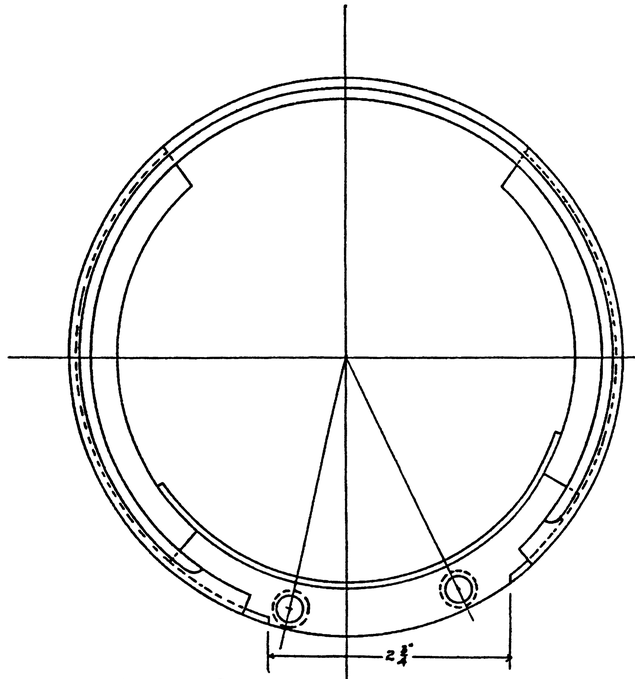

Cam Body Screws.

Cam Body.

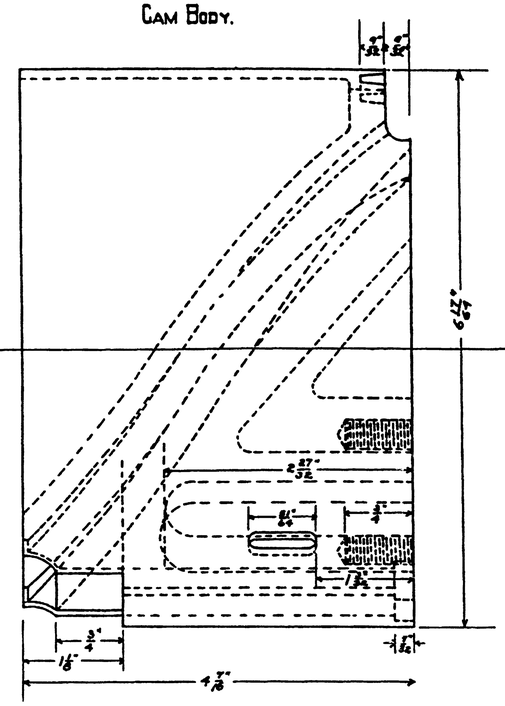

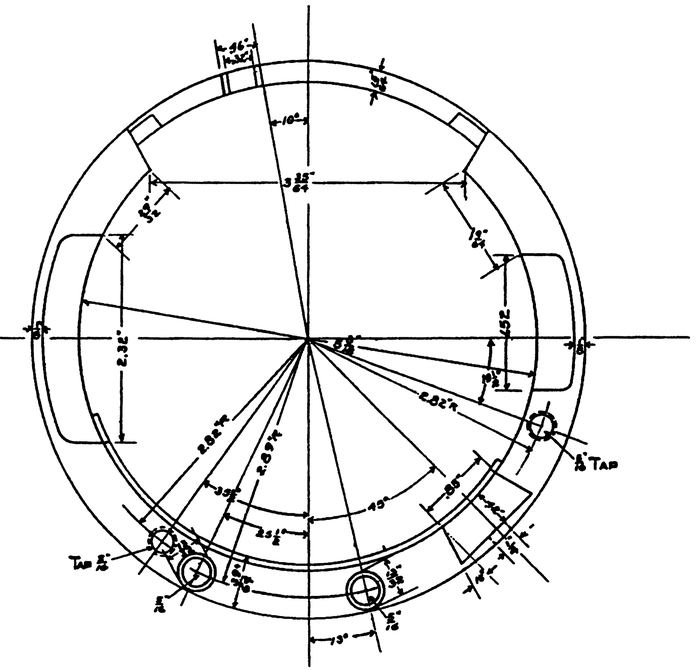

Carrier Block Dowel Pin.

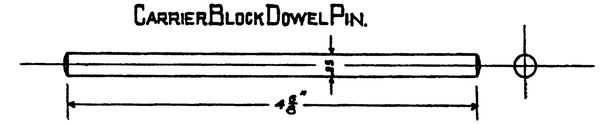

Carrier Block.

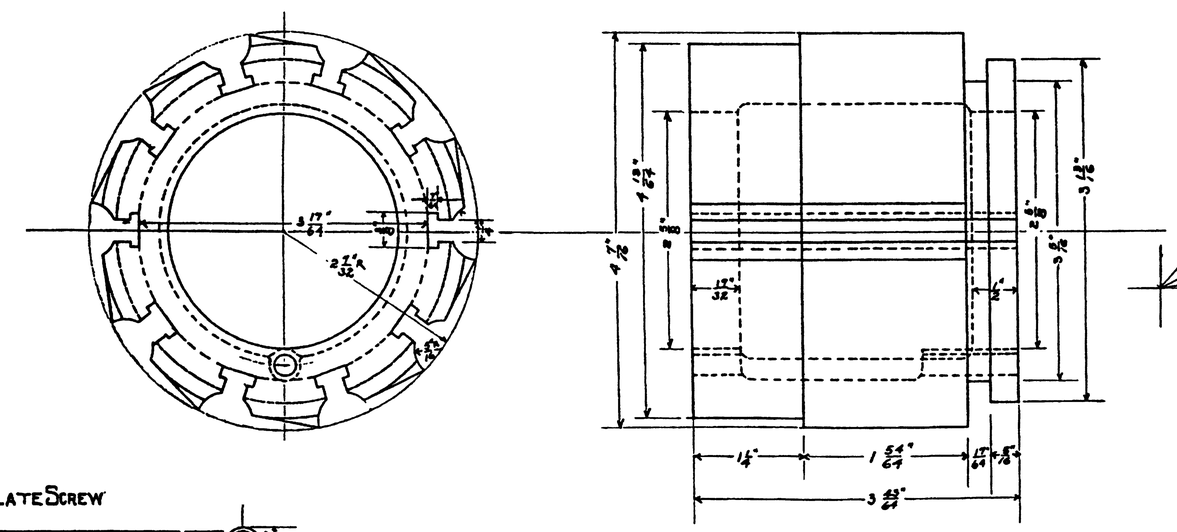

Recoil Plate

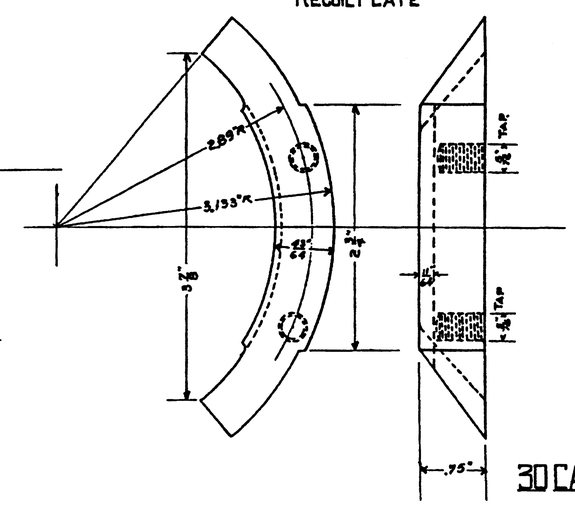

Recoil Plate Screw

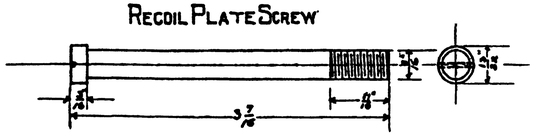

30 Cal Gatling Gun, Model 1900 Army

Details.

Colts Armory Nov 7 1905