A-294-52

DO NOT SCALE THIS DRAWING

PROTECTIVE FINISH
TYPE II CLASS A
AT ASSEMBLY 7265766

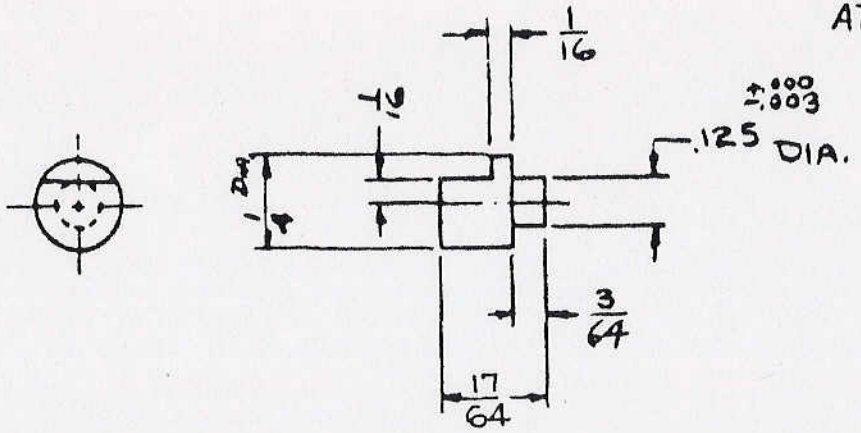

ORD. PART NO. 7265752

ITEM	NO. REQD.	MATERIAL	SIZE
	1	B-1113	¼ DIA.

HARRINGTON & RICHARDSON ARMS CO.
WORCESTER, MASS.

BRACE STOP STUD

.22 CAL. HORNET SURVIVAL WEAPON

MODEL 294

APPROVED PENDING
ORDNANCE DRAWING
LT. COL. F. J. McMorrow
ORD. CORP
DATE OCT. 19, 1950.

	REVISIONS	BY	DATE
D	CLASSIFICATION CANCELLED BY AUTHORITY OF OCM 33331	S.A.	15SEP54
C	17/64 WAS 5/16	S.A.	4-11-51
B	PROTECTIVE FINISH ADDED.	S.A.	10-13-50
A	3/64 WAS 3/32	TRINK	8-28-50

FRACTIONAL DIMENSIONS ± .005 UNLESS SPECIFIED OTHERWISE

PART & NO. BRACE STOP STUD #52		SCALE 2:1	OPER. NO. ~
DESIGNED BY	DATE	DRAWING NO.	
DETAILED BY A.S.B.	DATE 1-11-50	A-294-52	
TRACED BY E.G.W.	DATE		
CHECKED BY V.C.B.	DATE 1-11-50		
APPVD. BY	DATE	SHEET OF SHEETS	

30

A-165-38

DO NOT SCALE THIS DRAWING

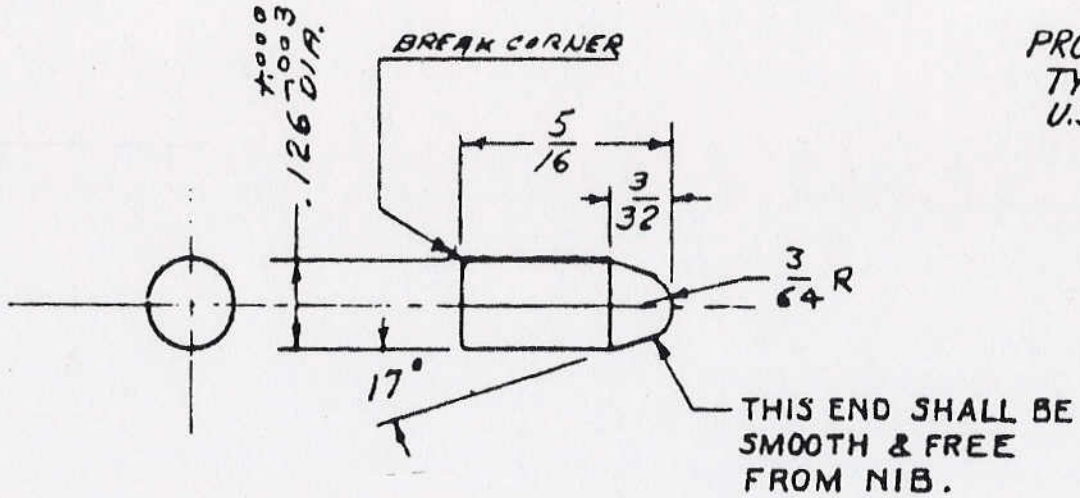

PROTECTIVE FINISH
TYPE II CLASS A
U.S.A. 57-0-2

ACTUAL SIZE

APPROVED PENDING
ORDNANCE DRAWING
LT. COL. F. H. McMorrow
ORD. DEPT.
DATE MAY 24, 1950

CASE HARDEN
MINIMUM DEPTH .010

ORD PART NO. 7265753

ITEM	NO. REQD.	MATERIAL	SIZE
38	1	AISI B-1113	

HARRINGTON & RICHARDSON ARMS CO.
WORCESTER, MASS.

NOTE: THIS DWG SUPERSEDES
DWG NO. (SAME) DATED NOV. 14, 45

EXTRACTOR SPRING PLUNGER

MODEL 165 REISING .22 CAL LONG RIFLE

PART & NO. EXTRACTOR SPR PLUNGER #38 | SCALE 4:1 | OPER. NO.

C			
B			
A	ADDED, PROTECTIVE FINISH & NOTE.	S.A.	10-13-50
	REVISIONS	BY	DATE

DESIGNED BY	DATE	DRAWING NO.
DETAILED BY	DATE 8-12-49	A-165-38
TRACED BY E.G.W.	DATE	
CHECKED BY	DATE 8.12.49	
APPVD. BY	DATE	SHEET OF SHEETS

FRACTIONAL DIMENSIONS ± .005 UNLESS SPECIFIED OTHERWISE

31

A-294-53

DO NOT SCALE THIS DRAWING

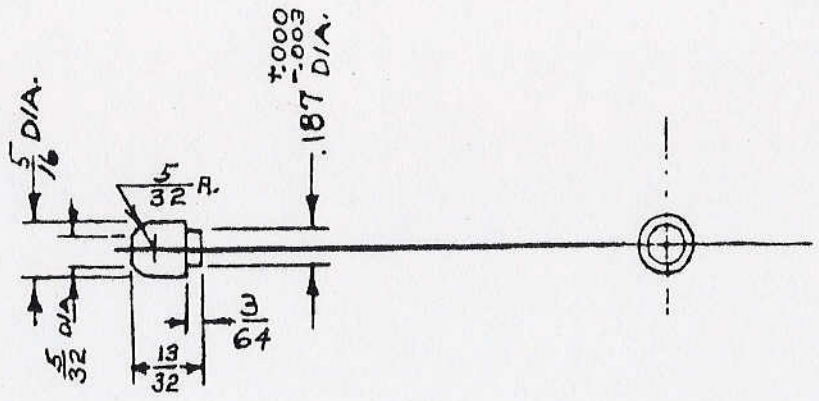

PROTECTIVE FINISH
TYPE II CLASS A
AT ASSY 7265766

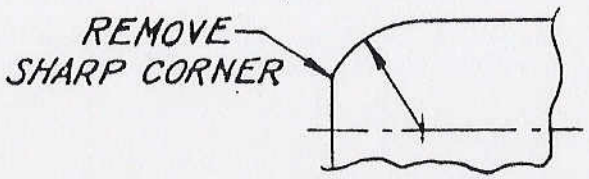

ENLARGED VIEW
SCALE 4/1

ORD. PART NO. 7265755

ITEM	NO. REQD.	MATERIAL	SIZE
53	1	1020	5/16 DIA.

HARRINGTON & RICHARDSON ARMS CO.
WORCESTER, MASS.

BRACE RELEASE BUTTON

MODEL 294 .22 CAL. HORNET SURVIVAL WEAPON

PART & NO. BRACE REL BUTTON | SCALE FULL | OPER. NO.

APPROVED PENDING
ORDNANCE DRAWING
LT. COL. F. J. McMorrow
ORD. CORP
DATE OCT. 19, 1950.

	REVISIONS	BY	DATE
C	CLASSIFICATION CANCELLED BY AUTHORITY OF OCM 33331	S.A.	18SEP54
B	ADDED; ENLARGED VIEW; PROTECTIVE FINISH NOTE. REMOVED PENTRATE	S.A.	10-13-50
A	3/64 WAS 3/32; 5/32 R. WAS 1/32 R; 5/32 ADDED	TRINK	8-26-50

FRACTIONAL DIMENSIONS ± .005 UNLESS SPECIFIED OTHERWISE

DESIGNED BY	DATE	DRAWING NO. A-294-53
DETAILED BY Y. C. B.	DATE 1-10-50	
TRACED BY E.G.W.	DATE	
CHECKED BY A.S.B.	DATE 1-10-50	
APPVD. BY	DATE	SHEET 1 OF 1 SHEETS

A-294-54

DO NOT SCALE THIS DRAWING

PROTECTIVE FINISH
TYPE II CLASS A
U.S.A. 57-0-2

SOLID MILD STEEL RIVET - AMERICAN STANDARD TRUSS OR

WAGON BOX HEAD

3/32 DIA. X 1/8 UNDER HEAD LENGTH

APPROVED PENDING
ORDNANCE DRAWING
LT. COL. F. Williamson
ORD. DEPT.
DATE MAY 24, 1950

ORD PART NO. 7265757

ITEM	NO. REQD.	MATERIAL	SIZE
54	2	SOFT MILD STEEL	

HARRINGTON & RICHARDSON ARMS CO.
WORCESTER, MASS.

BRACE RELEASE SPRING RIVET

MODEL 294 .22 CAL. HORNET SURVIVAL WEAPON

PART & NO. BRACE REL. SPR. RIVET | SCALE | OPER. NO.

REVISIONS	BY	DATE
C			
B	CLASSIFICATION CANCELLED BY AUTHORITY OF OCM 33331	S.A.	15SEP54
A	ADDED, PROTECTIVE FINISH	S.A.	10-18-50

DESIGNED BY	DATE	DRAWING NO.	
DETAILED BY V.C.B.	DATE 1-10-50	A-294-54	
TRACED BY	DATE		33
CHECKED BY A.S.B.	DATE 1-11-50		
APPVD. BY	DATE	SHEET 1 OF 1 SHEETS	

FRACTIONAL DIMENSIONS ± .005 UNLESS SPECIFIED OTHERWISE

A-294-23Ø

DO NOT SCALE THIS DRAWING

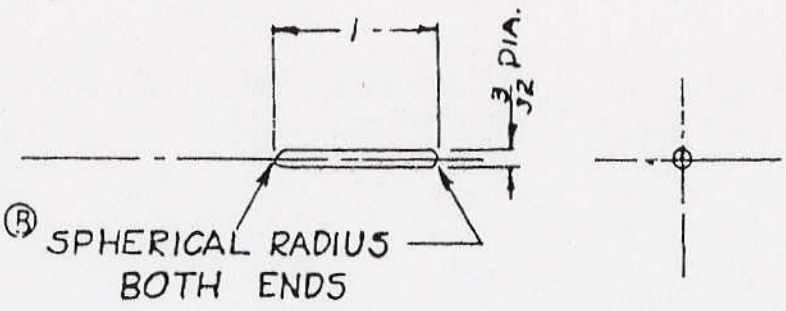

PROTECTIVE FINISH
TYPE II CLASS A
AT ASSEMBLY WITH
7265761

"Classification Changed to Unclassified
By Authority of OCO [illegible], 6 Jul 50"
[illegible] Lt Col, Ord Corps
Date 2 September 1954

APPROVED PENDING
ORDNANCE DRAWING
LT. COL [illegible]
ORD. DEPT.
DATE MAY 24, 1950

COMMERCIAL TOL.
±.000 / ±.002

ORD PART NO. 7265758

ITEM	NO. REQD.	MATERIAL	SIZE
230	1	B-1113	.0937 DIA.

HARRINGTON & RICHARDSON ARMS CO.
WORCESTER, MASS.

BARREL RETAINING SCREW CROSS PIN

MODEL 294-.22 CAL. HORNET SURVIVAL WEAPON

PART & NO. BRL. RTNG. SCR. CROSS PIN | SCALE FULL | OPER. NO.

	REVISIONS	BY	DATE
C	SEE NOTE ABOVE.	S.A.	2SEP54
B	SPHER RAD. WAS 1/64 x 45°	S.A.	1-7-52
A	ADDED, PROTECTIVE FINISH	S.A.	10-18-50

FRACTIONAL DIMENSIONS ± .005 UNLESS SPECIFIED OTHERWISE

DESIGNED BY	DATE	
DETAILED BY V.C.B	DATE FEB 13, 50	
TRACED BY	DATE	
CHECKED BY [illegible]	DATE 2-14-50	
APPVD. BY	DATE	

DRAWING NO. A-294-230

34

SHEET OF SHEETS

A-294-56

DO NOT SCALE THIS DRAWING

PROTECTIVE FINISH
TYPE II CLASS A
U.S.A. 57-0-2

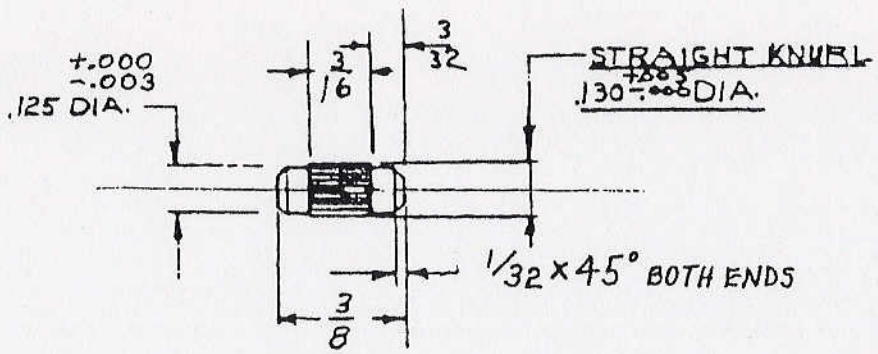

CYANIDE HARDEN

ORD. PART NO. 7265759

ITEM	NO. REQD.	MATERIAL	SIZE
56	2	B-1113	.125 DIA.

HARRINGTON & RICHARDSON ARMS CO.
WORCESTER, MASS.

SHOULDER BRACE PINS

MODEL 294 .22 CAL. HORNET SURVIVAL WEAPON

SUPERSEDES DWG SAME NO. DATED 1-10-50

APPROVED PENDING
ORDNANCE DRAWING
LT. COL. [signature]
ORD. CORP
DATE OCT. 19, 1950.

PART & NO. SHOULDER BRACE PINS	SCALE 2/1	OPER. NO.	
DESIGNED BY	DATE	DRAWING NO.	
DETAILED BY V. C. B.	DATE FEB 7, 50	A-294-56	
TRACED BY E.G.W.	DATE		
CHECKED BY [A/F]	DATE SEPT. 8, 50		
APPVD. BY	DATE	SHEET OF SHEETS	57

	REVISIONS	BY	DATE
C			
B	CLASSIFICATION CANCELLED BY AUTHORITY OF OCM 33531	S.A.	15SEP54
A	PROTECTIVE FINISH ADDED.	S.A.	10-13-50

FRACTIONAL DIMENSIONS ± .005 UNLESS SPECIFIED OTHERWISE

35

A-294-250

DO NOT SCALE THIS DRAWING

PROTECTIVE FINISH
TYPE II CLASS A
U.S.A. 57-0-2

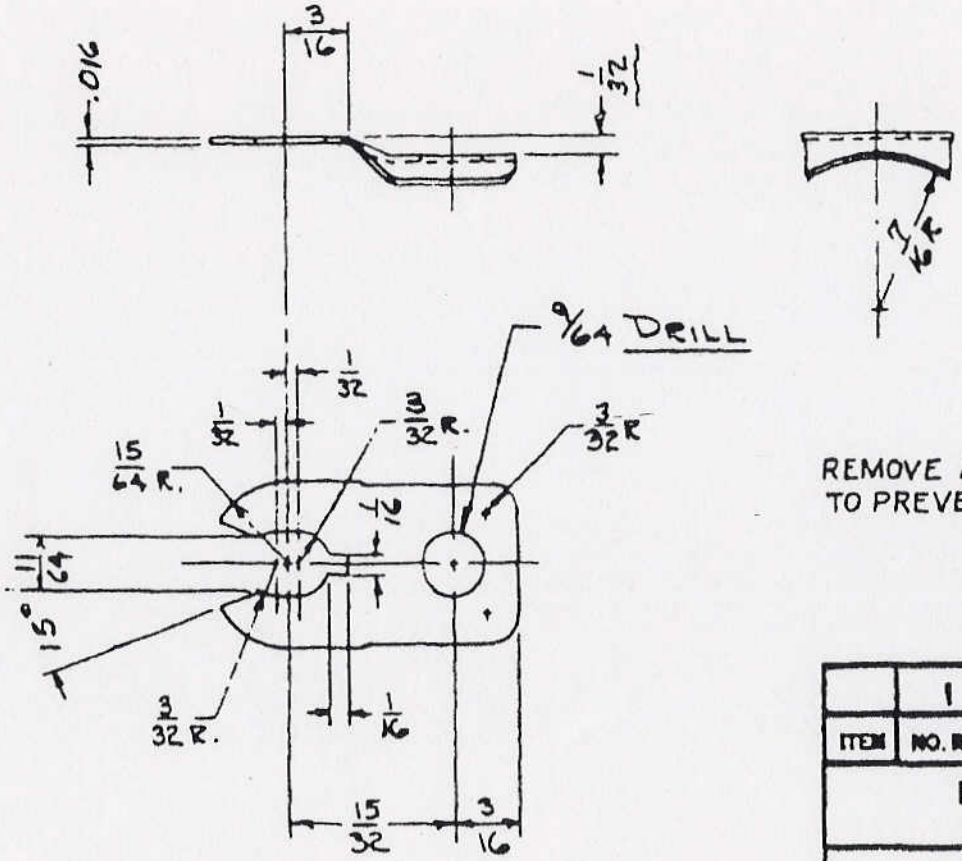

APPROVED PENDING
ORDNANCE DRAWING
LT. COL.: F. J. McMorrow
ORD. DEPT.
DATE MAY 24, 1950

REMOVE ALL BURRS SHARP EDGES & CORNERS
TO PREVENT INJURY TO FINGERS.

ORD PART NO. 7265760

ITEM	NO. REQD.	MATERIAL	SIZE
	1	SPRING STEEL	

HARRINGTON & RICHARDSON ARMS CO.
WORCESTER, MASS.

BOLT STOP SCREW SPRING
.22 CAL. HORNET SURVIVAL WEAPON
MODEL 294

PART & NO. BOLT STOP SCR. SPR. # 250	SCALE 2:1	OPER. NO. ~	
DESIGNED BY	DATE	DRAWING NO.	
DETAILED BY A.S.B.	DATE 2-5-50	A-294-250	
TRACED BY	DATE		
CHECKED BY FRINK	DATE 3-20-50		
APPVD. BY	DATE	SHEET 1 OF 1 SHEETS	

	REVISIONS	BY	DATE
C			
B'	CLASSIFICATION CANCELLED BY AUTHORITY OF OCM 33331	S.A.	15SEP54
A	ADDED, PROTECTIVE FINISH & NOTE.	S.A.	10-13-50

FRACTIONAL DIMENSIONS ± .005 UNLESS SPECIFIED OTHERWISE

36

A-294-240

DO NOT SCALE THIS DRAWING

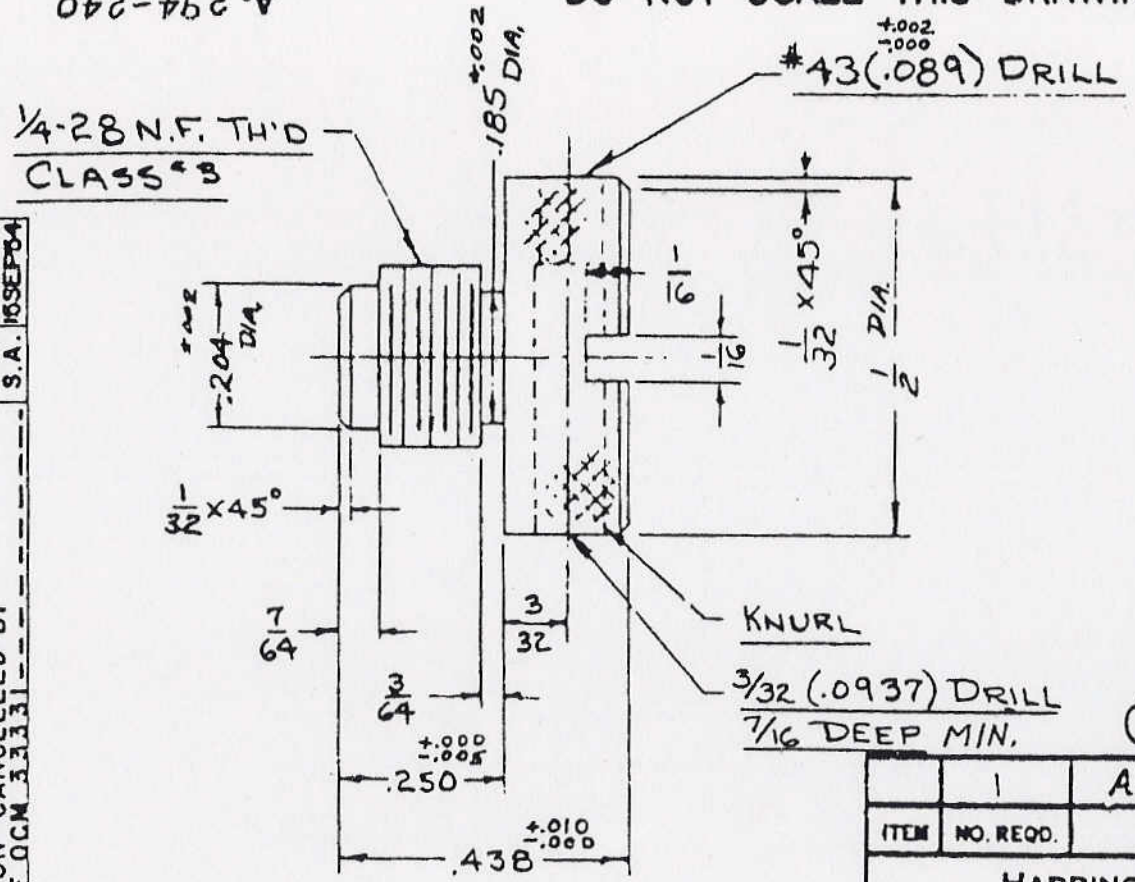

PROTECTIVE FINISH
TYPE II CLASS A
U.S.A. 57-0-2 AT ASSEMBLY
WITH 7265758

ORD. PART NO. 7265761

ITEM	NO. REQD.	MATERIAL	SIZE
	1	Al. S. I. - B1113	

HARRINGTON & RICHARDSON ARMS CO.
WORCESTER, MASS.

BARREL RETAINING SCREW
.22 CAL HORNET SURVIVAL WEAPON

MODEL 294

PART & NO. BARREL RET SCR #240 | SCALE 4.1 | OPER. NO. ~

APPROVED PENDING
ORDNANCE DRAWING
LT. COL. [signature]
ORD. CORP
DATE OCT 19, 1950.

D	CHAMFER ADDED, TOL. ADDED, A.I.S.I.-B1113 WAS B-1113	S.A.	1-7-52
E	CLASSIFICATION CANCELLED BY AUTHORITY OF OCM 33331	S.A.	15SEP54

	REVISIONS	BY	DATE
C	PROTECTIVE FINISH ADDED.	S.A.	10-13-50
B	7/16 DEEP WAS 7/8 DEEP	[illegible]	8-5-50
A	7/64 WAS .0625; ADDED 3/32 DRILL 7/8 DEEP	[illegible]	8-5-50

DESIGNED BY	DATE	DRAWING NO
DETAILED BY [illegible]	DATE 2-8-50	A-294-240
TRACED BY	DATE	
CHECKED BY [illegible]	DATE FEB [illegible]	
APPVD. BY	DATE	SHEET 1 OF 1 SHEETS

FRACTIONAL DIMENSIONS ± .005 UNLESS SPECIFIED OTHERWISE

A-294-92

DO NOT SCALE THIS DRAWING

PROTECTIVE FINISH
TYPE II CLASS A
U.S.A. 57-0-2

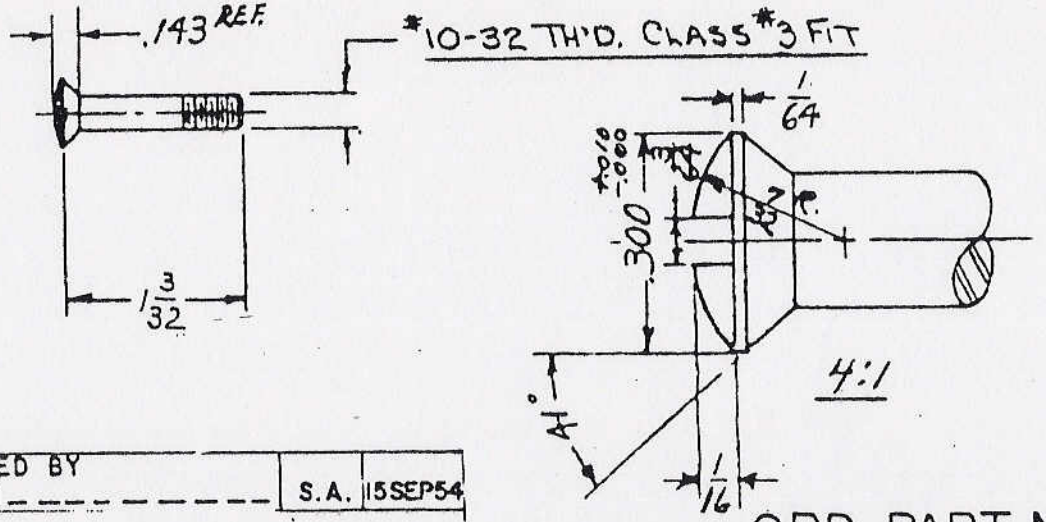

ORD. PART NO. 7265762

			#10-32 OVAL HEAD
ITEM	NO. REQD.	MATERIAL	SIZE

HARRINGTON & RICHARDSON ARMS CO.
WORCESTER. MASS.

TAKE DOWN SCREWS (FRONT)

.22 CAL. HORNET SURVIVAL WEAPON

MODEL 294

PART & NO. TAKE DOWN SCRS. #92 | SCALE FULL | OPER. NO. ~

D1	CLASSIFICATION CANCELLED BY AUTHORITY OF OCM 33331	S.A.	15SEP54			
C	1 3/32 WAS 1 1/16	S.A.	1-2-51	DESIGNED BY	DATE	DRAWING NO.
B	PROTECTIVE FINISH ADDED; 1 1/16 WAS 1 1/8	S.A.	10-13-50	DETAILED BY A.S.B	DATE 1-11-50	A-294-92 38
A	HEAD DETAIL ADDED	A.S.B	7-19-50	TRACED BY E.G.W.	DATE	
	REVISIONS	BY	DATE	CHECKED BY V.C.B	DATE 1-11-50	
FRACTIONAL DIMENSIONS ± .005 UNLESS SPECIFIED OTHERWISE				APPVD. BY	DATE	SHEET OF SHEETS

APPROVED PENDING
ORDNANCE DRAWING
LT. COL. F. H. McClintock
ORD. CORP
DATE OCT. 19 1950.

A-294-169

DO NOT SCALE THIS DRAWING

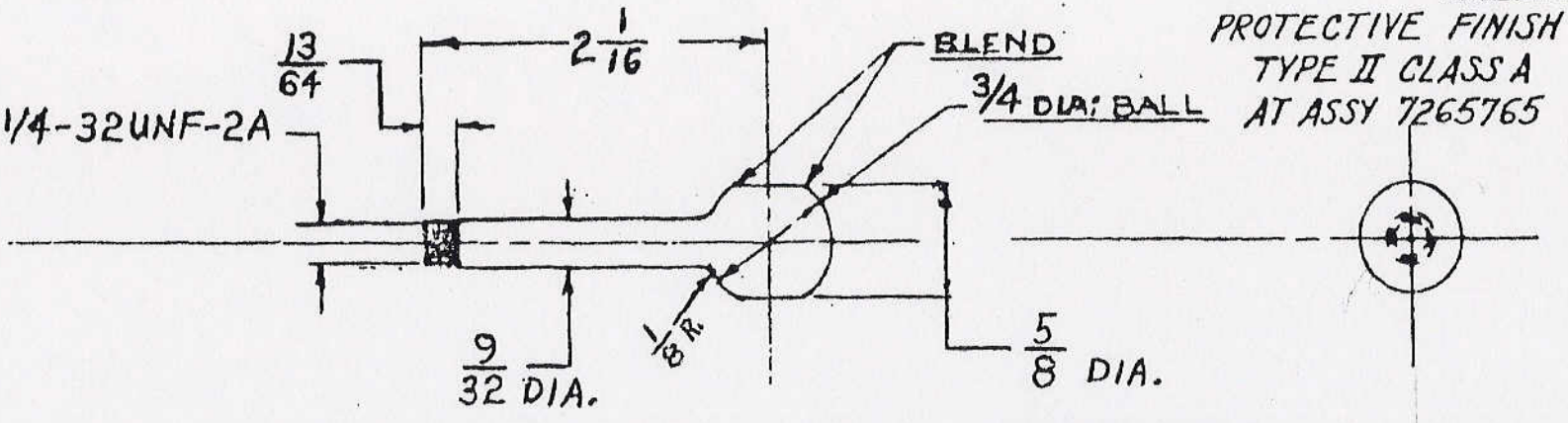

PROTECTIVE FINISH
TYPE II CLASS A
AT ASSY 7265765

APPROVED PENDING
ORDNANCE DRAWING
LT. COL. [signature]
ORD. DEPT.
DATE MAY 24 1950

ORD PART NO. 7265763

ITEM	NO. REQD.	MATERIAL	SIZE
		A.I.S.I. B-1113	ALTERNATE
169	1	AISI - C1020	5/8 DIA 2 9/16

HARRINGTON & RICHARDSON ARMS CO.
WORCESTER, MASS.

BOLT HANDLE

MODEL 294 .22 CAL. HORNET SURVIVAL WEAPON

PART & NO. BOLT HANDLE #169 | SCALE FULL | OPER. NO.

	REVISIONS	BY	DATE
C1	CLASSIFICATION CANCELLED BY AUTHORITY OF OCM 33331	S.A.	15SEP54
B	A.I.S.I. - C1020 WAS SAE 1020, ALT MAT. ADDED	S.A.	1-7-52
A	ADDED, PROTECTIVE FINISH	S.A.	10-13-50

DESIGNED BY		DATE	
DETAILED BY Y. C. B		DATE FEB. 10-50	
TRACED BY E.G.W		DATE	
CHECKED BY A.S.B.		DATE 2-11-50	
APPVD. BY		DATE	

DRAWING NO. A-294-169

SHEET 39 OF SHEETS

FRACTIONAL DIMENSIONS ± .005 UNLESS SPECIFIED OTHERWISE

-B

DO NOT SCALE THIS DRAWING

Ⓐ PROTECTIVE FINISH
TYPE II CLASS A
USA 57-0-2

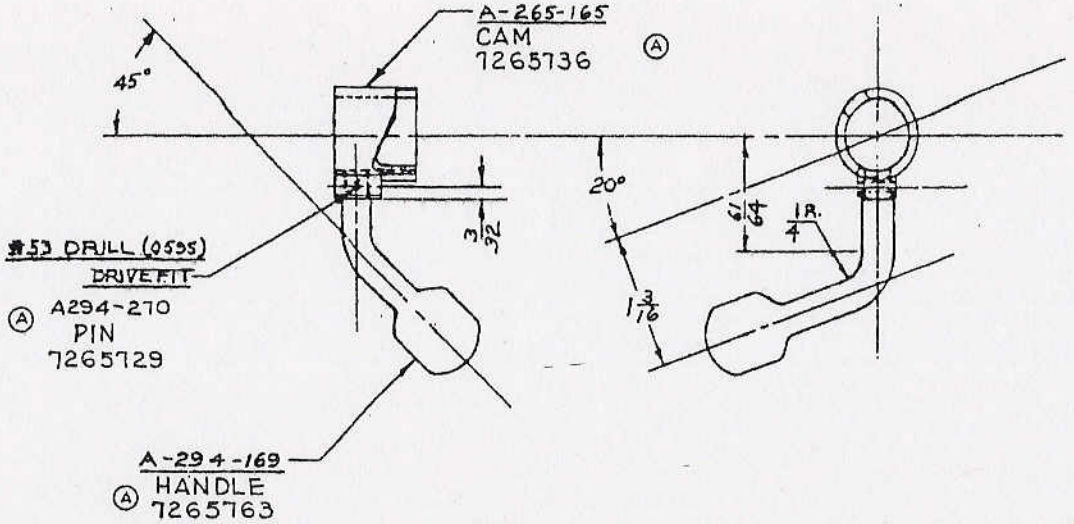

APPROVED PENDING
ORDNANCE DRAWING
LT. COL. F. Mellorrow
ORD. CORP
DATE OCT. 19, 1950

CYANIDE HARDEN

ORD. PART NO. 7265765

ITEM	NO. REQD.	MATERIAL	SIZE
180	1		

HARRINGTON & RICHARDSON ARMS CO.
WORCESTER, MASS.

COCKING CAM ASSEMBLY

MODEL 294 22 CAL. HORNET SURVIVAL WEAPON

PART & NO. COCKING CAM ASSEM #180		SCALE FULL	OPER. NO.
DESIGNED BY	DATE	DRAWING NO.	
DETAILED BY V.C.B.	DATE FEB. 11, 50	B-294-180	
TRACED BY	DATE		
CHECKED BY A.S.S.	DATE 2-13-50		
APPVD. BY	DATE	SHEET OF SHEETS	

C			
B	CLASSIFICATION CANCELLED BY AUTHORITY OF OCM 33331	S.A.	15SEP54
A	ADDED; PROT. FINISH, ORD. DRG. NO.'s & NOTE	S.A.	10-13-50
	REVISIONS	BY	DATE

FRACTIONAL DIMENSIONS ± UNLESS SPECIFIED OTHERWISE

DO NOT SCALE THIS DRAWING

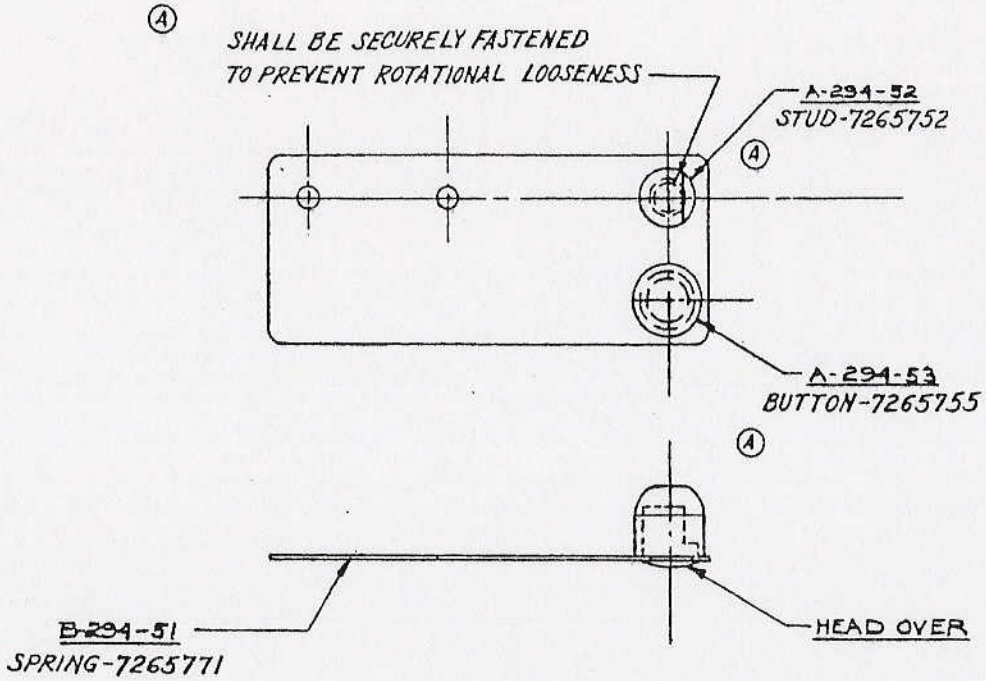

(A) PROTECTIVE FINISH
TYPE II CLASS A
U.S.A. 57-0-2

APPROVED PENDING
ORDNANCE DRAWING
LT. COL. [signature]
ORD. DEPT.
DATE MAY 29, 1950

ORD PART NO 7265766

ITEM	NO. REQD.	MATERIAL	SIZE
57	1		

HARRINGTON & RICHARDSON ARMS CO.
WORCESTER, MASS.

BRACE RELEASE ASSEMBLY

MODEL 294-22 CAL. HORNET SURVIVAL WEAPON

PART & NO. BRACE REL. ASSEM.		SCALE #1	OPER. NO.
DESIGNED BY	DATE	DRAWING NO.	
DETAILED BY V.C.B	DATE FEB. 13, 50	B-294-57	
TRACED BY	DATE		
CHECKED BY A.S.B.	DATE 2-14-50		
APPVD. BY	DATE	SHEET OF SHEETS	

	REVISIONS	BY	DATE
C			
B	CLASSIFICATION CANCELLED BY AUTHORITY OF OCM 33331		
A	ADDED: FASTENED NOTE, PROTECTIVE FINISH NOTE, & PART NUMBERS	S.A.	10-13-50

FRACTIONAL DIMENSIONS ± .005 UNLESS SPECIFIED OTHERWISE

DO NOT SCALE THIS DRAWING

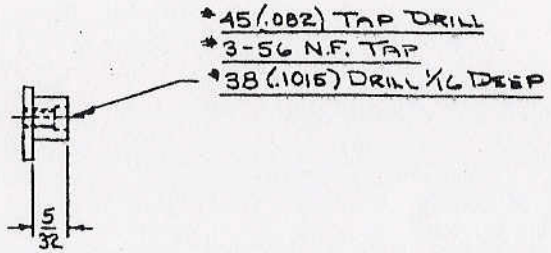

PROTECTIVE FINISH
Ⓒ TYPE III CLASS A GRADE I
USA 57-0-2

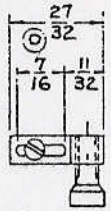

APPROVED PENDING
ORDNANCE DRAWING
LT. COL. F. K. Mellorrow
ORD. CORP
DATE OCT 12, 1950

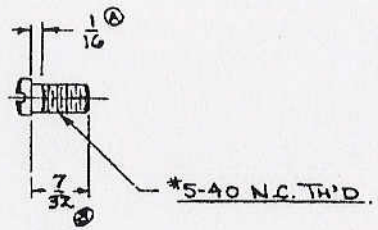

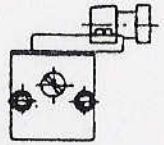

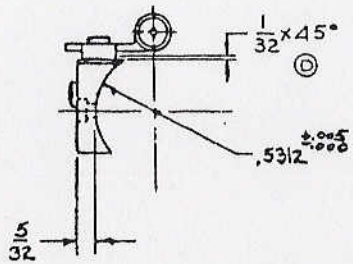

Ⓓ

USE LYMAN *55-H SIGHT
REMOVE LEVER & SPRING WASHER

ORD. PART NO. 7265767

ITEM	NO. REQD.	MATERIAL	SIZE
109	1		LYMAN *55-H

HARRINGTON & RICHARDSON ARMS CO.
WORCESTER, MASS.

REAR SIGHT

MODEL 294 CAL. .22 HORNET SURVIVAL WEAPON

PART & NO. REAR SIGHT *		SCALE	OPER. NO.
DESIGNED BY	DATE	DRAWING NO.	
DETAILED BY A.S.B	DATE 3-20-50	B-294-109	
TRACED BY	DATE		
CHECKED BY [illegible]	DATE SEPT. 8.50		
APPVD. BY	DATE	SHEET 1 OF 1 SHEETS	57

	REVISIONS	BY	DATE
E'	CLASSIFICATION CANCELLED BY AUTHORITY OF OCM 33331	S.A.	16SEP54
D	NOTE REMOVED; 1/32 x 45° DIM ADDED SLIDE DIMS. ADDED, VIEW ADDED TRINK 3-6-51	S. A.	3-22-51
C	ADDED, PROTECTIVE FINISH .	S. A	10-13-50
B	7/32 WAS 1/4	[illegible]	8.8.50
A	ADDED 1/16 DIM ON SCREW	TRINK	7/25/50

FRACTIONAL DIMENSIONS ± .005 UNLESS SPECIFIED OTHERWISE

42

B-294-5

DO NOT SCALE THIS DRAWING

PROTECTIVE FINISH
Ⓓ TYPE II CLASS A
U.S.A. 57-0-2

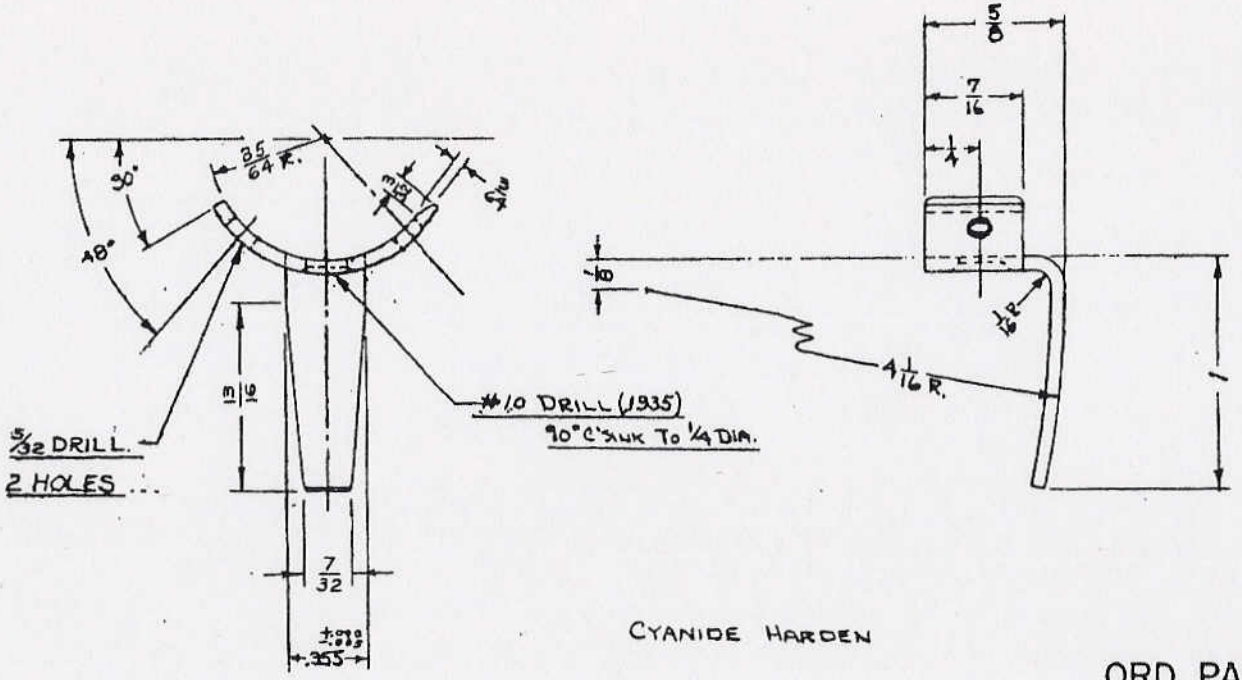

APPROVED PENDING
ORDNANCE DRAWING
LT. COL. F. W. Mallory
CHIEF, CONTR. DIV.
DATE OCT. 19, 1950

CYANIDE HARDEN

ORD. PART NO. 7265768

REMOVE ALL BURRS, SHARP CORNERS & EDGES.

ITEM	NO. REQD.	MATERIAL	SIZE
		AISI 1020	BRONCHAN 166H (.065)

HARRINGTON & RICHARDSON ARMS CO.
WORCESTER, MASS.

MAGAZINE GUIDE
.22 CAL. HORNET SURVIVAL WEAPON
MODEL 294

PART & NO. MAGAZINE GUIDE # 5		SCALE 2:1	OPER. NO. ~
DESIGNED BY	DATE	DRAWING NO.	
DETAILED BY A.S.B.	DATE 1-11-50	B-294-5	
TRACED BY E.G.W.	DATE		
CHECKED BY V.C.B.	DATE 1-12-50		
APPVD. BY	DATE	SHEET OF SHEETS	

	REVISIONS	BY	DATE
F	CLASSIFICATION CANCELLED BY AUTHORITY OF OCM 33331	S.A.	15SEP54
E	7/32 WAS 5/16 ; 13/16 WAS 1/4, AISI ADDED TO MAT.	S.A.	1-30-51
D	PROT. FINISH & NOTE ADDED. D .355 +.005 -.003 WAS .355 +.003 -.005 A.P.N. 9-11-50	S.A.	10-13-50
C	#10 C'SINK ADDED; 2 1/64 x 3/16 CHAMFER ADDED	H	7.31 SU
B	35/64 R. WAS 17/32 R	V.C.B.	1-25-50
A	#10 WAS 13/64 DRILL; 5/16 DIA. MIN. x 7/16 LONG	V.C.B.	1-25-50

FRACTIONAL DIMENSIONS ± UNLESS SPECIFIED OTHERWISE

DO NOT SCALE THIS DRAWING

PROTECTIVE FINISH
TYPE II CLASS A
USA 57-0-2

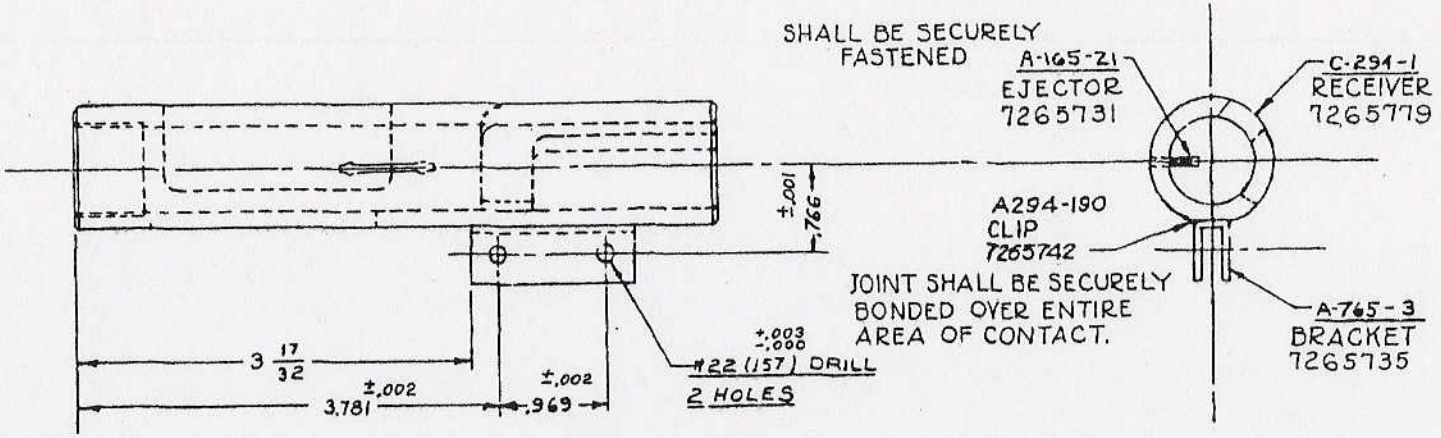

APPROVED PENDING
ORDNANCE DRAWING
LT. COL. F. McMorrow
ORD. CORP
DATE OCT. 19, 1950

ORD. PART NO. 7265769

ITEM	NO. REQD.	MATERIAL	SIZE

HARRINGTON & RICHARDSON ARMS CO.
WORCESTER, MASS.

RECEIVER ASSEMBLY

MODEL 294, .22 CAL. HORNET SURVIVAL WEAPON

PART & NO. RECEIVER ASSEM. #93	SCALE FULL	OPER. NO.
DESIGNED BY	DATE	DRAWING NO.
DETAILED BY V.C.H.	DATE 2-10-50	B-294-93
TRACED BY	DATE	
CHECKED BY A.S.R.	DATE 2-10-50	
APPVD. BY	DATE	SHEET OF SHEETS

	REVISIONS	BY	DATE
C	CLASSIFICATION CANCELLED BY AUTHORITY OF OCM 33331	S.A.	15 SEP 54
B	ADDED; CLIP, REMOVED; SILVER SOLDER NOTE	S.A.	1-7-52
A	ADDED; PROT. FINISH, ORD. DRG. NO.'s, & NOTES.	S.A.	10-13-50

FRACTIONAL DIMENSIONS ± .005 UNLESS SPECIFIED OTHERWISE

DO NOT SCALE THIS DRAWING

© PROTECTIVE FINISH
TYPE II CLASS A
AT ASSEMBLY
7265766

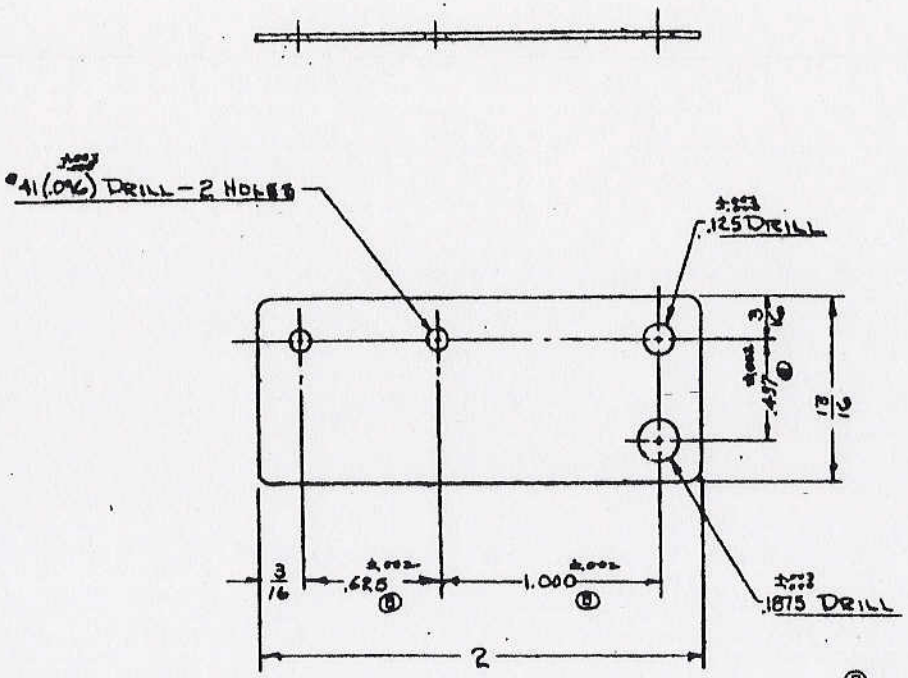

APPROVED PENDING
ORDNANCE DRAWING
LT. COL. [signature]
ORD. CORP
DATE OCT. 19, 1950

Ⓓ SPRING TEMPER

ORD. PART NO. 7265771

ITEM	NO. REQD.	MATERIAL	SIZE
		SPRING STEEL	BIRMINGHAM #26 GA (.096)

HARRINGTON & RICHARDSON ARMS CO.
WORCESTER, MASS.

BRACE RELEASE SPRING
.22 CAL. HORNET SURVIVAL WEAPON

MODEL .294

PART & NO. BRACE RELEASE SPR. 51		SCALE 2:1	OPER. NO. ~
DESIGNED BY	DATE	DRAWING NO.	
DETAILED BY A.S.B.	DATE 1-11-50	B-294-51	
TRACED BY	DATE		
CHECKED BY Y.C.A.	DATE 1-11-50		
APPVD. BY	DATE	SHEET OF SHEETS	

	REVISIONS	BY	DATE
E	CLASSIFICATION CANCELLED BY AUTHORITY OF OCM 33331	S.A.	15SEP54
D	ADDED, SPRING TEMPER	S.A.	1-7-52
C	PROTECTIVE FINISH ADDED.	S.A.	10-13-50
B	.625 Was 5/8; .437 Was 7/16; Added 1.000	[illegible]	7-31-50
A	REDESIGNED	A.S.B.	1-25-50

FRACTIONAL DIMENSIONS ± .005 UNLESS SPECIFIED OTHERWISE

45

DO NOT SCALE THIS DRAWING

Ⓒ PROTECTIVE FINISH
TYPE II CLASS A
USA 51-0-2

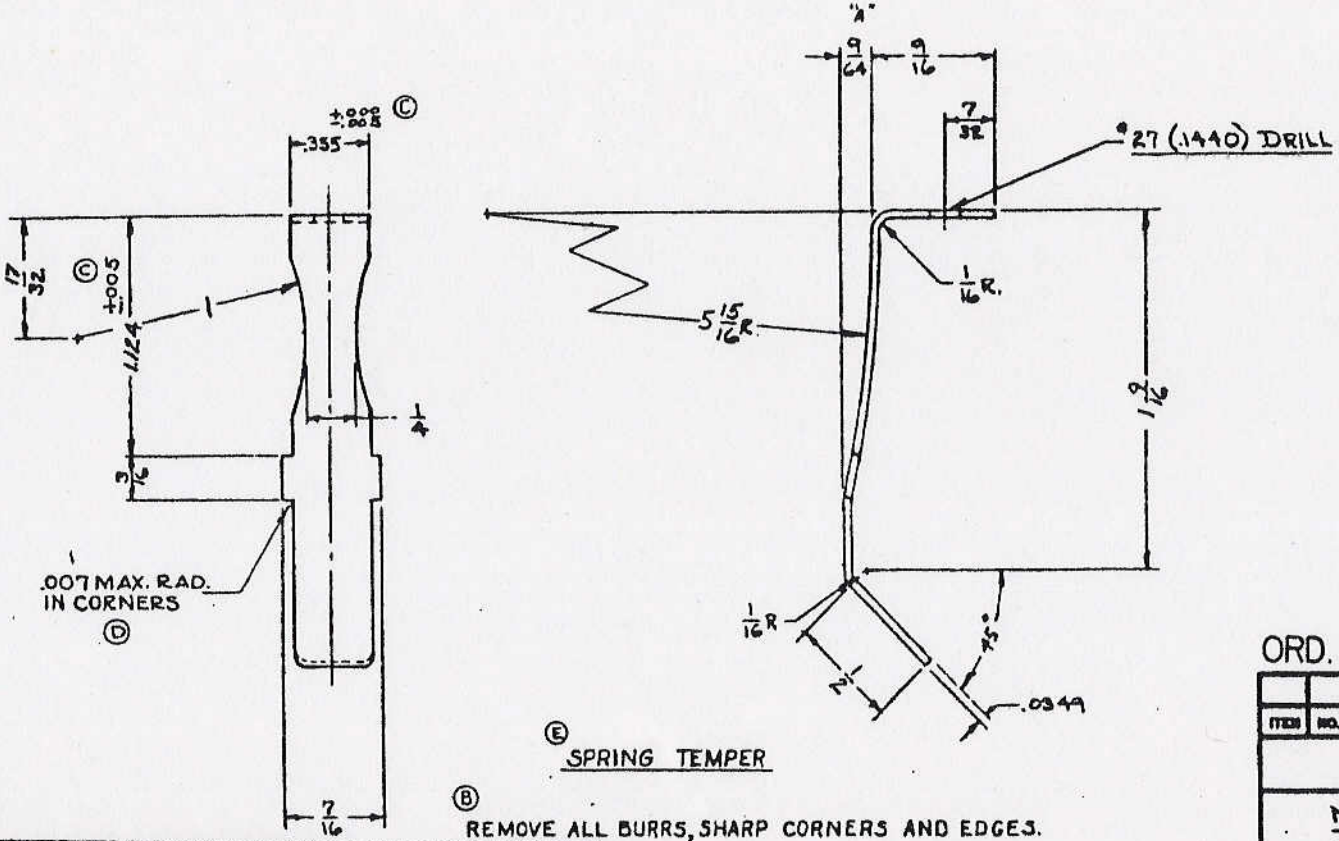

APPROVED PENDING
ORDNANCE DRAWING
LT. CO. F. McMorrow
ORD. CORP
DATE OCT. 19, 1950

Ⓔ SPRING TEMPER

Ⓑ REMOVE ALL BURRS, SHARP CORNERS AND EDGES.

ORD. PART NO. 7265772

		SPRING STEEL	BIRMINGHAM #21 GA. (.032)
ITEM	NO. REQR.	MATERIAL	SIZE

HARRINGTON & RICHARDSON ARMS CO.
WORCESTER, MASS.

MAGAZINE RELEASE SPRING
22 CAL. HORNET SURVIVAL WEAPON
MODEL 294

PART & NO. Mag. Release Spring #33		SCALE 2:1	SPEC. NO. ~
DESIGNED BY	DATE	DRAWING NO.	
DETAILED BY A.S.R.	DATE 1-11-50	B-294-33	
TRACED BY	DATE		
CHECKED BY V.C.B.	DATE 1-11-50		
APPVD. BY	DATE	SHEET OF SHEETS	

	REVISIONS	BY	DATE
F	CLASSIFICATION CANCELLED BY AUTHORITY OF OCM 33331	S.A.	16SEP54
E	ADDED, SPRING TEMPER	S.A.	1-7-52
D	NOTE ADDED	S.A.	4-11-51
C	±.005 WAS ±.002; +.000 -.005 WAS +.000 -.002	S.A.	1-30-51
B	ADDED; PROTECTIVE FINISH & NOTE	S.A.	10-13-50
A	REVISED OUTLINE	[illegible]	8-1-50

FRACTIONAL DIMENSIONS ± UNLESS SPECIFIED OTHERWISE

DO NOT SCALE THIS DRAWING

PROTECTIVE FINISH
TYPE II CLASS A
U.S.A. 57-0-2

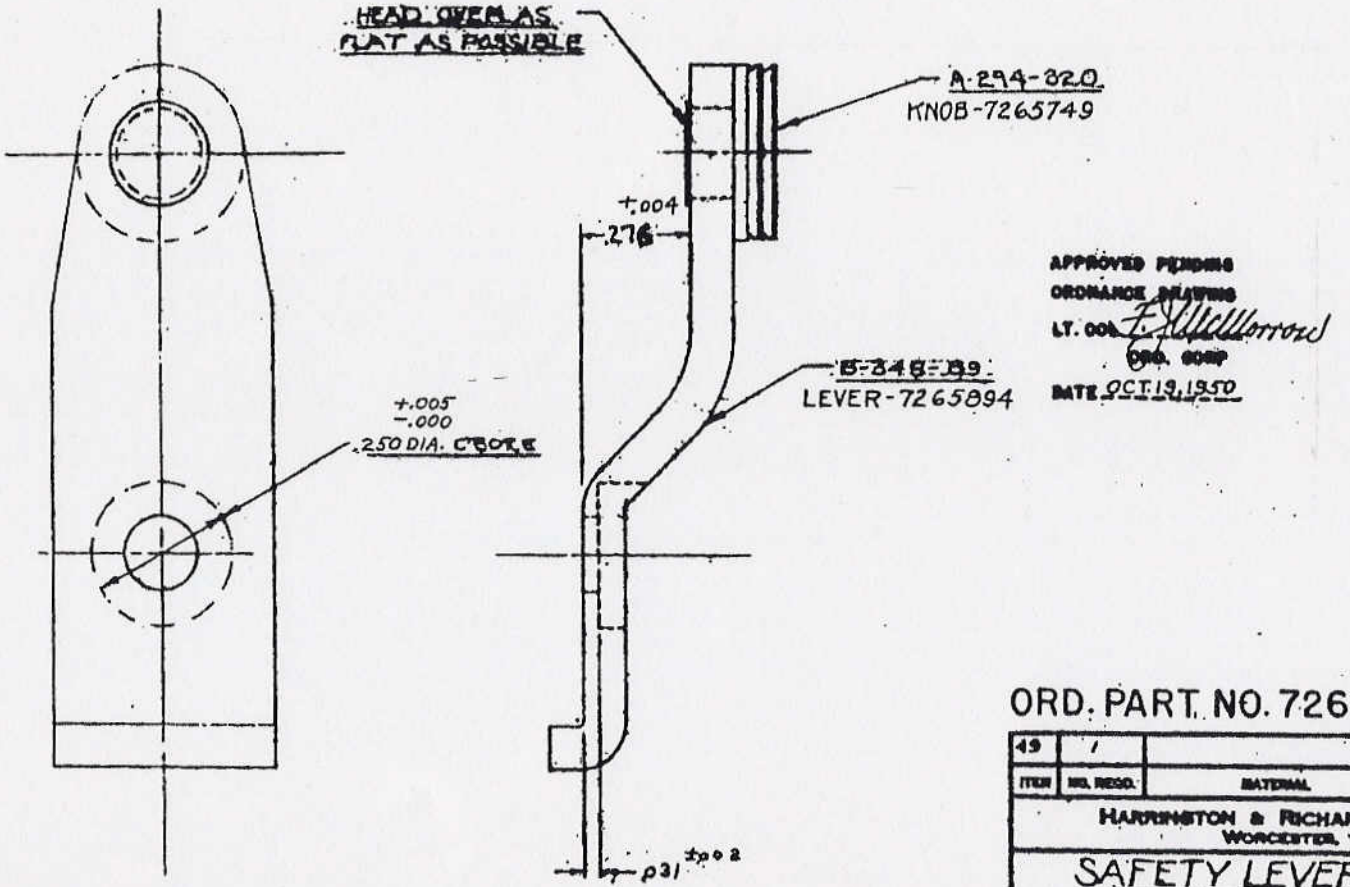

APPROVED PENDING
ORDNANCE DRAWING
LT. COL. F. McMorrow
ORD. CORPS
DATE OCT 19 1950

ORD. PART NO. 7265773

ITEM	NO. REQD.	MATERIAL	SIZE
43	1		

HARRINGTON & RICHARDSON ARMS CO.
WORCESTER, MASS.

SAFETY LEVER ASSEM.

MODEL 294 .22 CAL. HORNET SURVIVAL WEAPON

PART & NO. SAFETY LEVER ASSEM		SCALE 4	OPER. NO.
DESIGNED BY	DATE	DRAWING NO.	
DETAILED BY V. C. B	DATE FEB 13 '50	B-294 49	
TRACED BY	DATE		
CHECKED BY A.S.B	DATE 10-13-50		
APPD. BY	DATE	SHEET OF SHEETS	

	REVISIONS	BY	DATE
E	CLASSIFICATION CANCELLED BY AUTHORITY OF OCM 33331	S.A.	15SEP54
D	PROTECTIVE FINISH ADDED, ORD.PT.NO.SA0069	S.A.	10-13-50
C	ADDED .276 +.004 DIM.		9-11-50
B	.250 +.005 -.000 WAS 5/16 DIA.	TRINK	8-22-50
A	A-294-320 WAS A348-85	TRINK	8-22-50

FRACTIONAL DIMENSIONS ± UNLESS SPECIFIED OTHERWISE.

DO NOT SCALE THIS DRAWING

PROTECTIVE FINISH :
Ⓐ TYPE II CLASS A U.S.A. 57-0-2
AFTER SILVER SOLDERING.

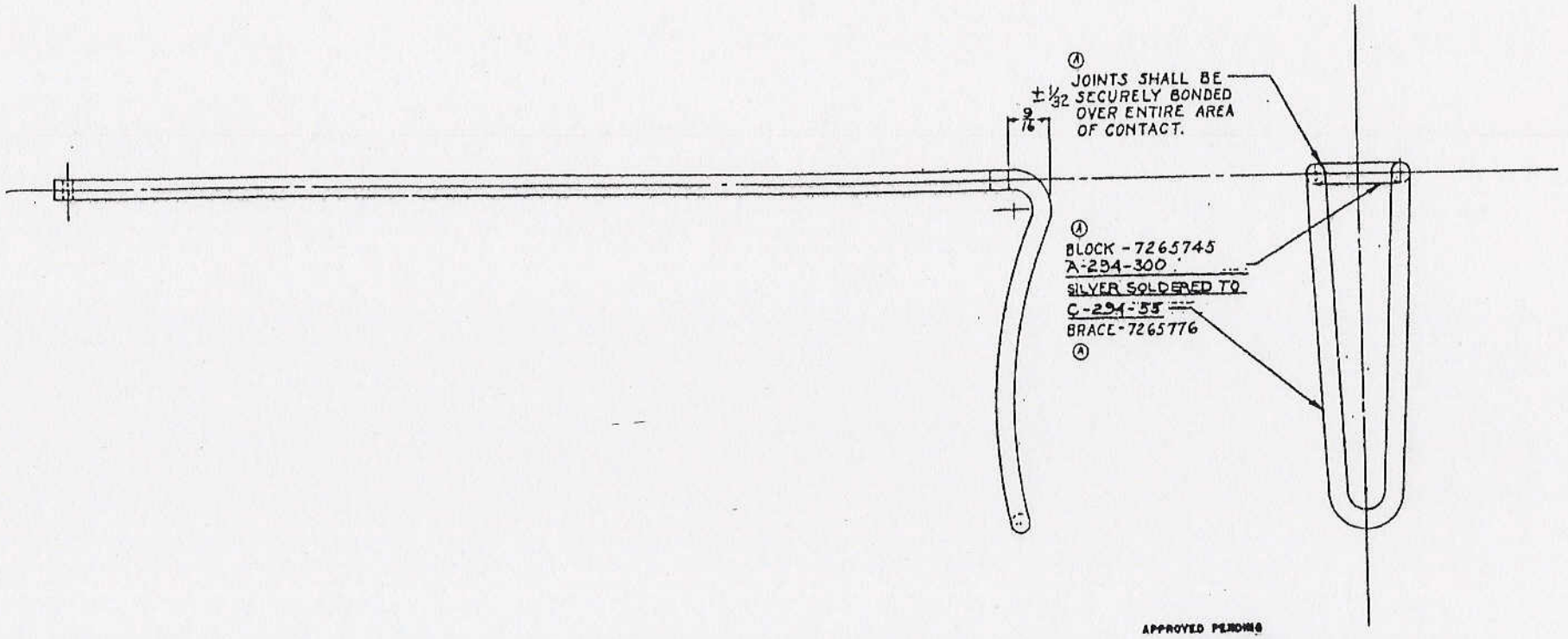

APPROVED PENDING
ORDNANCE DRAWING
LT. COL. F. J. Willmorrow
ORD. CORP
DATE OCT. 19, 1950

ORD. PART NO. 7265775

ITEM	NO. REQD.	MATERIAL	SIZE

HARRINGTON & RICHARDSON ARMS CO.
WORCESTER, MASS.

SHOULDER BRACE ASSEMBLY

MODEL 294-22 CAL. HORNET SURVIVAL [illegible]

PART 8 NO. SHOULDER BRACE ASSY. [illegible]

DESIGNED BY	DATE	DRAWING NO.
DETAILED BY C.G.	DATE [illegible]	C-294-310
TRACED BY E.G.M.	DATE	
CHECKED BY [illegible]	DATE 2-28-50	
APPVD. BY	DATE	SHEET OF SHEETS

REVISIONS	BY	DATE
CLASSIFICATION CANCELLED BY AUTHORITY OF OCM 33331	S.A.	16 SEP 54
ADDED: PROTECTIVE FIN., NOTE TO BOND JOINTS, ORD. DIR. PT. NOS.	S.A.	10-13-50

FRACTIONAL DIMENSIONS ± UNLESS SPECIFIED OTHERWISE

DO NOT SCALE THIS DRAWING

PROTECTIVE FINISH
TYPE II CLASS A
AT ASSEMBLY 7265775

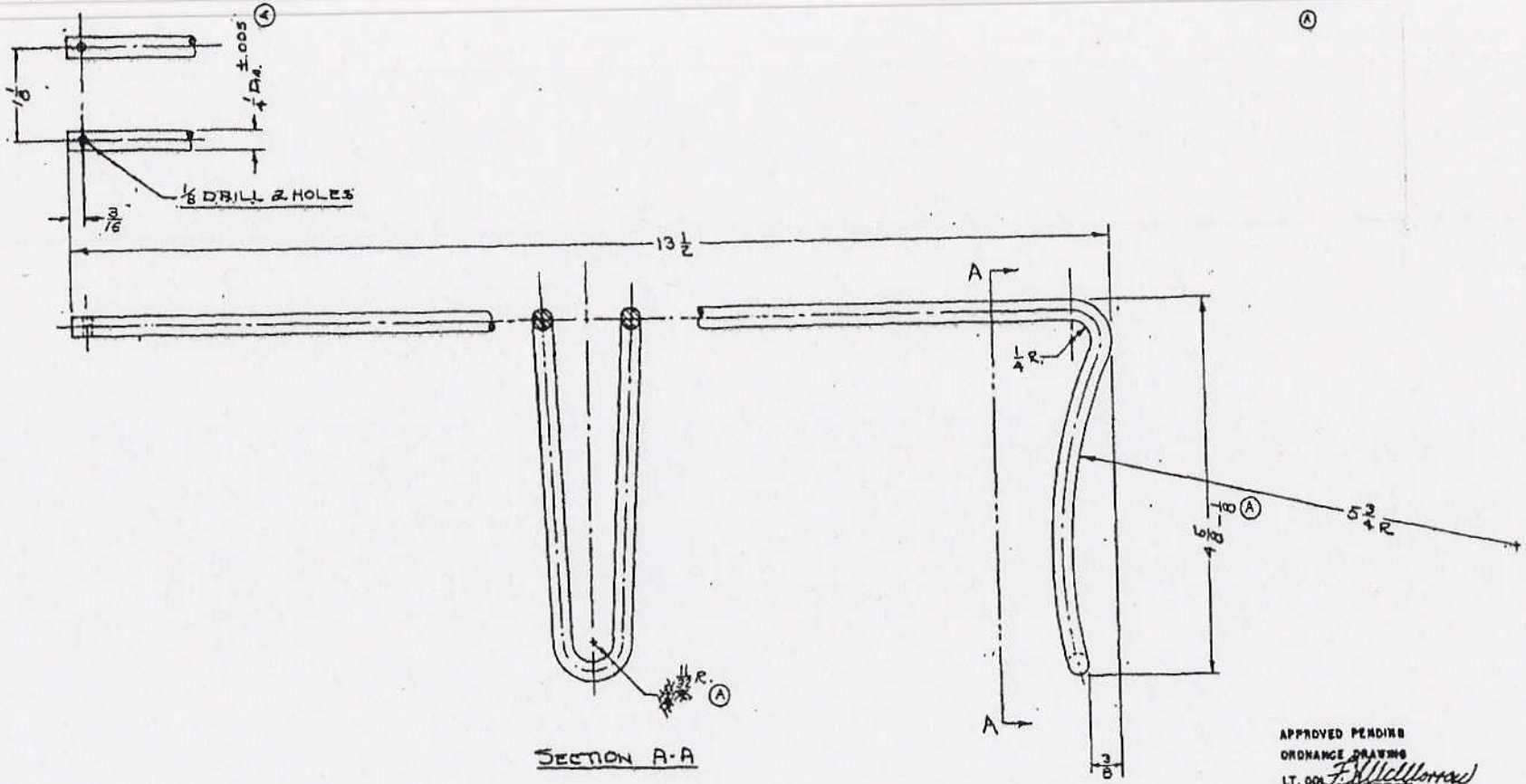

APPROVED PENDING
ORDNANCE DRAWING
LT. COL. F. H. McMorrow
ORD. CORP
DATE OCT. 19, 1950

ORD. PART NO. 7265776

ITEM	NO. REQD.	MATERIAL	SIZE
		A151 1020 B1112 & B1113 (ALTERNATIVE)	1/4 Dia.

HARRINGTON & RICHARDSON ARMS CO.
WORCESTER, MASS.

SHOULDER BRACE
22 CAL. HARNEY SURVIVAL WEAPON

CLASSIFICATION CANCELLED BY AUTHORITY OF DCN 33331		S.A.	15SEP54
ADDED: PROT. FIN., B1112 & B1113 (ALTERNATIVE) ±.005		S.A.	10-13-50
11/32 R. WAS 1/4 R.	REVISIONS 4 5/8 - 1/8 WAS 4 5/8	BY	DATE

UNLESS SPECIFIED OTHERWISE

C-294-55

49

DO NOT SCALE THIS DRAWING

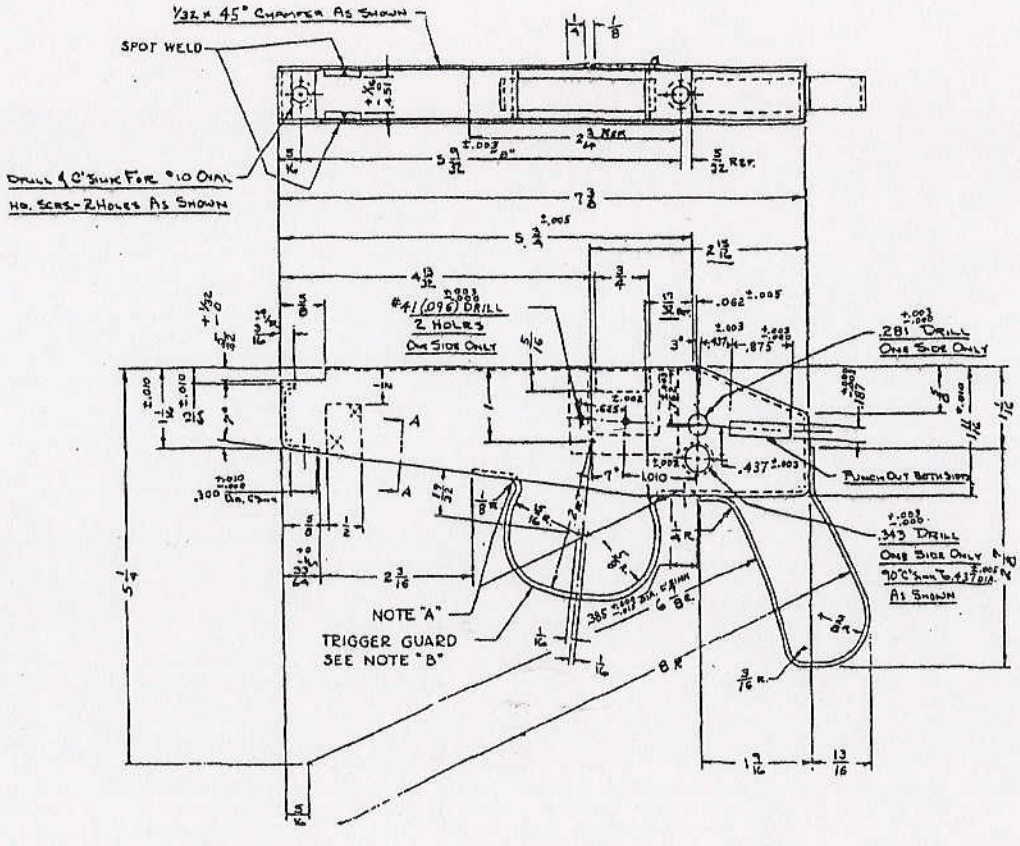

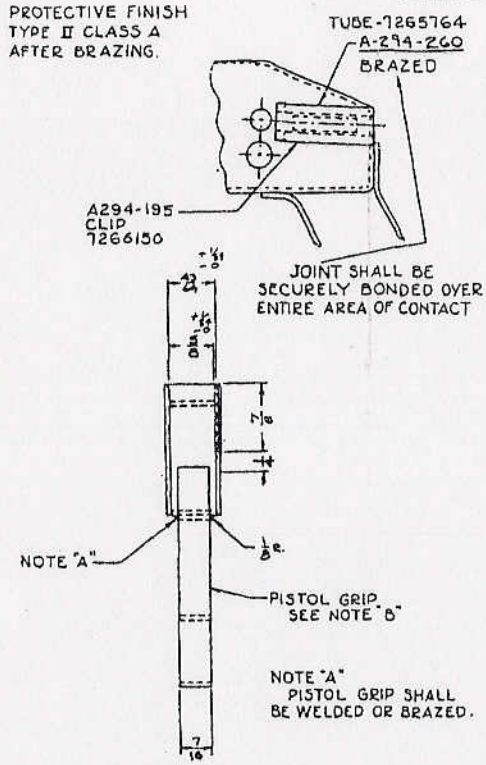

APPROVED PENDING ORDNANCE DRAWING
LT. COL. [signature]
ORD. CORP
DATE OCT. 19, 1950

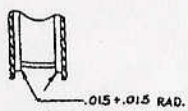

SECTION A-A

REMOVE ALL BURRS, SHARP CORNERS & EDGES.

NOTE: "B"

PISTOL GRIP AND TRIGGER GUARD SHALL LINE UP WITH VERTICAL AND LONGITUDINAL AXIS WITHIN 2° OF ANGLE.

SUPERSEDES DWG. SAME NO. DATED 1-11-50.

ORD. PART NO. 7265777

ITEM	NO. REQD.	MATERIAL	SIZE
		A151-C1015 COLD FINISHED	#14 GA. (.066) [illegible]

HARRINGTON & RICHARDSON ARMS CO.
WORCESTER, MASS.

FRAME
.22 CAL. HORNET SURVIVAL WEAPON

MODEL .294

PART & NO. FRAME #200		SCALE FULL	DWG. NO. ~
DESIGNED BY	DATE	DRAWING NO.	
DRAWN BY A & B	DATE 7-25-50	C-294-200	
TRACED BY	DATE		
CHECKED BY	DATE JULY 31 50		
APPR. BY	DATE	SHEET 1 OF 1	SHEETS

B1	CLASSIFICATION CANCELLED BY AUTHORITY OF OCM 33331	S.A.	16SEP54
F	CHANGED, A294-190 TO A294-195, 7265742 TO 7266150	S.A.	1-7-52
E	ADDED SUPPORT PLATES & SECTION A-A	S.A.	1-30-51
D	CHANGED; NOTE A'	S.A.	1-2-51
C	ADDED, PRO FINISH, BONDED NOTE, NOTES 'A' & 'B'	S.A.	10-13-50
B	2 13/16 WAS 3 1/32 REF. DIM'S ADDED; C'S'K ADDED	RIMK	9-18-50
A	ADDED C'SINK DIM'S	TRIMK	9-28-50
	REVISIONS	BY	DATE

FRACTIONAL DIMENSIONS ± 1/64 UNLESS SPECIFIED OTHERWISE

50

DO NOT SCALE THIS DRAWING

PROTECTIVE FINISH
TYPE II CLASS A
U.S.A. 57-0-2

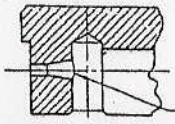

COUNTERSINK WITH #40 OR #41 DRILL WITH TAPERED END.

OPTIONAL

RADIUS "S" & DIAMETER "R" SHALL BE CONCENTRIC WITH DIAMETER "M" WITHIN .006 INDICATOR READING.

SLOTS "P" & "Q" SHALL BE CENTRAL WITH DIAMETER "M" WITHIN ±.002

DIMENSION "X" SHALL BE CENTRAL WITH DIAMETER "M" WITHIN ±.003

DIAMETERS "L", "M", & "N" SHALL BE CONCENTRIC WITH EACH OTHER WITHIN .006 INDICATOR READING

.095 -.010 DIA. COUNTERBORE X 45° ANGLE OPTIONAL METHOD

APPROVED PENDING ORDNANCE DRAWING
LT. COL. [signature]
ORD. CORP
DATE - OCT. 19, 1950

DIAMETERS "L" & "M" SHALL BE UNIFORMLY SMOOTH

CYANIDE HARDEN
1425°-10 MIN. QUENCH IN OIL

#15 (.180) DRILL

R .067 +.003

#30 (.1285) DRILL 1 3/16 DEEP

THESE SURFACES SHALL BE UNIFORMLY SMOOTH & SQUARE WITH ℄

SLOT "V" SHALL BE CENTRAL WITH DIAMETER "M" WITHIN ±.003

REMOVE ALL BURRS, SHARP CORNERS, AND EDGES

#V (.177) DRILL 82° C'SINK TO 13/64 DIA.

ORD. PART NO. 7265778

ITEM	NO. REQD.	SUBSTITUTE STEEL AISI-8115 AISI-E4320 7500 STEEL 4.0 3/32 MATERIAL	SIZE
		HARRINGTON & RICHARDSON ARMS CO. WORCESTER MASS.	
		BOLT	
		.22 CAL HORNET SURVIVAL WEAPON	
		MODEL 294	
		PART & NO. BOLT & 2	SCALE 2:1
		DESIGNED BY / DATE	DRAWING NO. 51 C-294-2
		DETAILED BY A.S.B. DATE 2-9-50	
		TRACED BY / DATE	
		CHECKED BY Y.C.B. DATE 2-9-50	

H	CLASSIFICATION CANCELLED BY AUTHORITY OF OCM 33331	S.A.	15 SEP 54
G	ADDED SUB MAT. .025-.010 WAS .095-.05, 5/8 WAS 5/16 DELETED NOTE "USE MOD. 249 W. ARM. ADDED .312"	S.A.	1-7-52
F	ADDED; SECTIONAL VIEW & NOTE; OP. METHOD NOTE CHANGED; 3 NOTES. "REAM" REMOVED 5/16R TO 1½ R. CUTTER WAS 5/8 L	S.A.	1-2-51
E	ADDED NOTES 1, 2 & 3 - MAT'L WAS 3115 (.001) DRILL & POST FINISH - REMOVED, PENETRATE & REMOVE SHARP CORNERS ADDED SECTIONAL VIEW	S.A.	10-13-50
D	1R. WAS .78R	A.S.B.	8-16-50
C	TOLERANCE ADDED	TRIM	8-7-50
B	.450 ADDED	TRIM	8-7-50
A	.062 WAS .062		7.13.50
	REVISIONS	BY	DATE

FRACTIONAL DIMENSIONS ± .005 UNLESS SPECIFIED OTHERWISE

DO NOT SCALE THIS DRAWING

PROTECTIVE FINISH
TYPE II CLASS A AT
ASSEMBLY 7265769

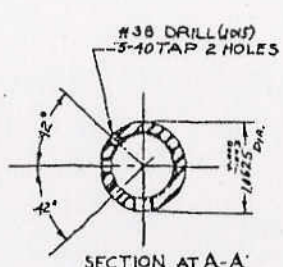

SECTION AT A-A

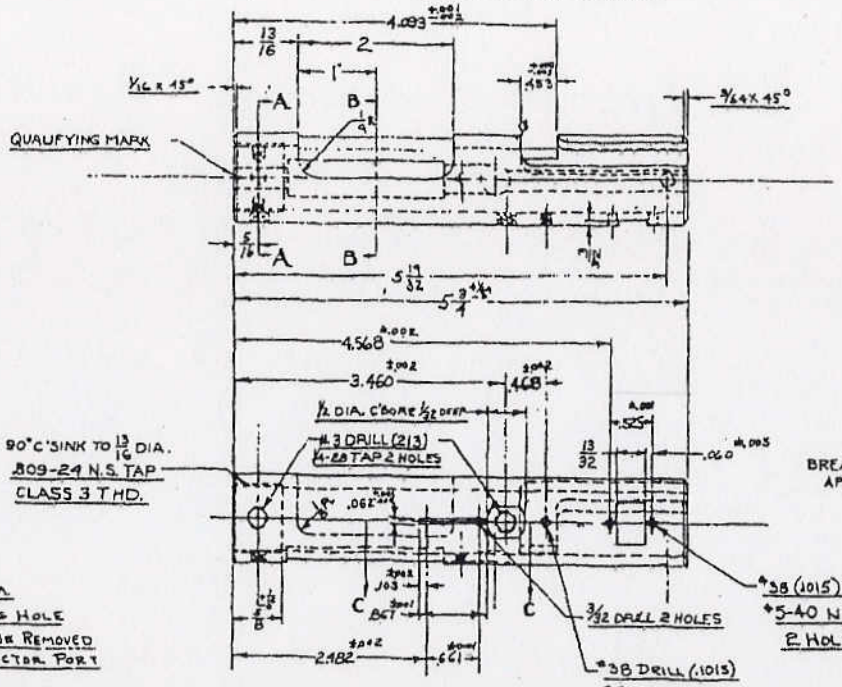

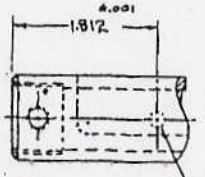

WORKING HOLE WILL BE REMOVED BY PROFILING EJECTOR PORT

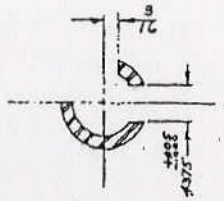

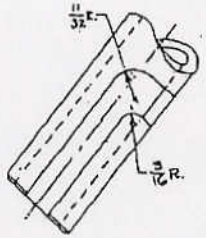

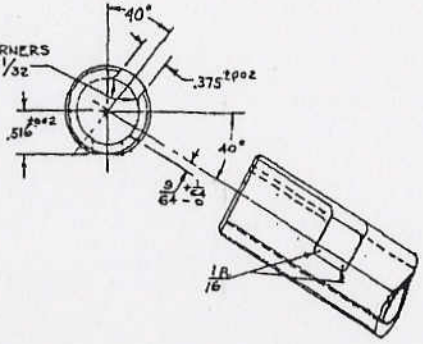

REMOVE ALL BURRS, SHARP EDGES & CORNERS TO PERMIT FREE MOVEMENT OF BOLT.

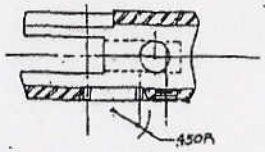

SECTION C-C

APPROVED PENDING
ORDNANCE DRAWING
LT. COL. F. Hillebrand
ORD. CORPS
DATE OCT. 19, 1950

M	CLASSIFICATION CANCELLED BY AUTHORITY OF OCM 33331	S.A.	18 SEP 50
L	C1118 WAS B1113	S.A.	1-7-52
K	ADDED NOTE: 1/2 DIA WAS 1/8 · 40° WAS 30° REVISED PER ECO 124	S.A.	8-12-50
J	PROJECTION ADDED. 3" ADDED, 10°C'SINK FOR THD. P.A.N. .1875 .1825 WAS .7813 .4468 WAS .4375	S.A.	10-13-50

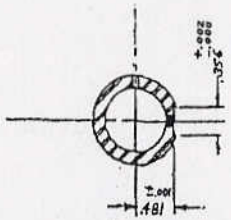

SECTION AT D-D

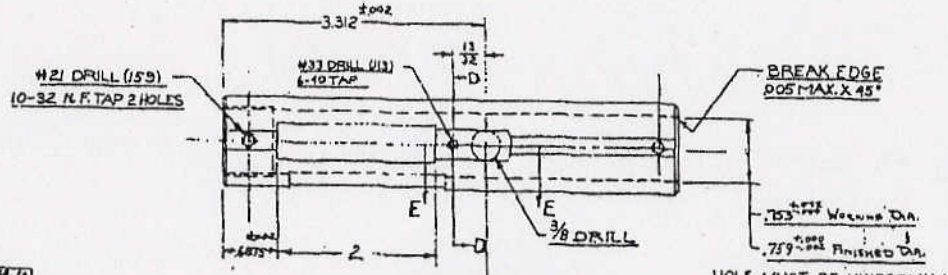

HOLE MUST BE UNIFORMLY SMOOTH

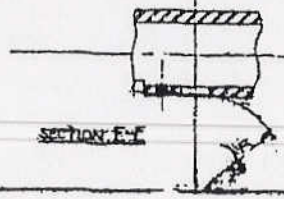

ITEM	QUAN.	PART NO.	NOMENCLATURE	MATERIAL
1	1			A151-C1118

ORD. PART NO. 7265779

HARRINGTON & RICHARDSON ARMS CO
WORCESTER, MASS.

RECEIVER

C294-1

H	3 C'SINK REMOVED, .7813 DIA ADDED	ITEM	9-28-50
G	1/2 DIA. C'BORE 1/32 DEEP ADDED	A.S.S.	8-25-50
F	[illegible]	[illegible]	8-1-50
E	[illegible]	[illegible]	7-31-50
D	[illegible]	[illegible]	7-27-50
C	[illegible]	[illegible]	7-24-50
B	[illegible]	[illegible]	[illegible]
A	[illegible]	[illegible]	5-24-50

UNLESS SPECIFIED OTHERWISE

DATE JULY 31, 1950

REVISIONS

NO	DATE	NO	DATE
1	1-2-51		
2	3-8-51		

C7265794

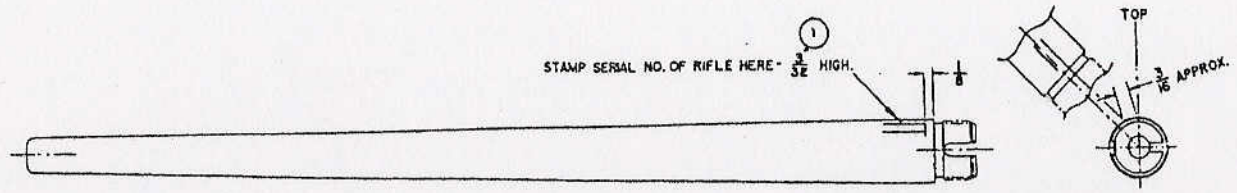

BARREL MARKINGS.

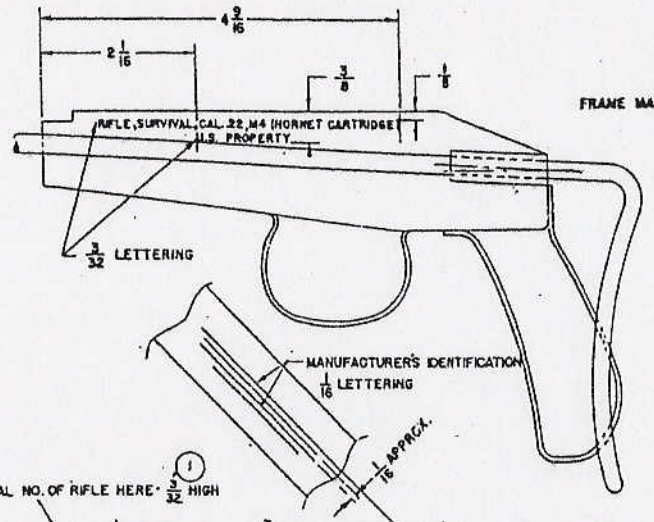

FRAME MARKINGS

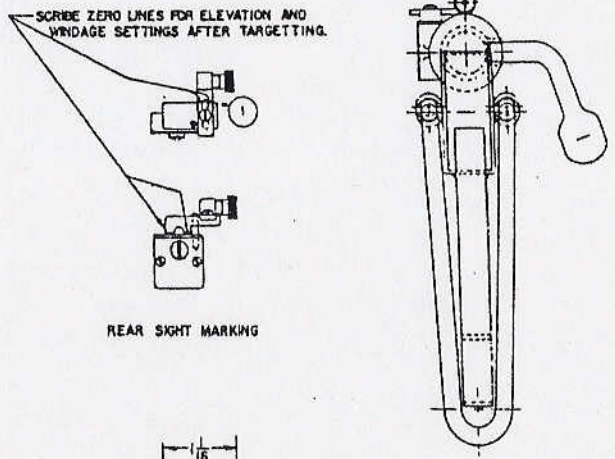

REAR SIGHT MARKING

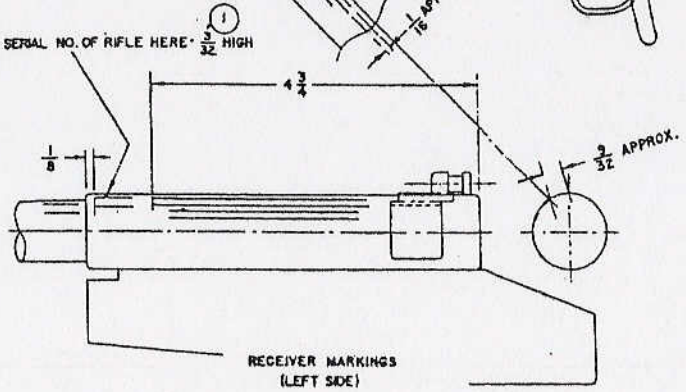

RECEIVER MARKINGS
(LEFT SIDE)

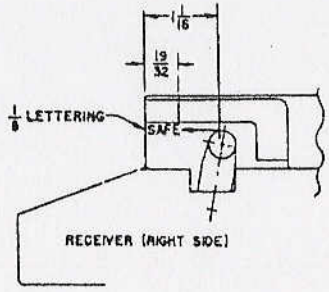

RECEIVER (RIGHT SIDE)

MARKING DRAWING

(2)

HEAT TREATMENT & PROTECTIVE FINISH

PHYSICAL PROPERTIES	DRG. PERTAINS TO	
	DRG. NO.	NAME OF PART
Y.P.	F7162911	RIFLE, SURVIVAL
T.S.		CAL. .22, M4
EL. 2		
RED.		
BR.	DO NOT DISCLOSE PART NO.	
ROCK.	DO NOT	

SCALE 1/1

TOLERANCES & DIMENSIONS EXCEPT AS NOTED

C 7265794

ORDNANCE DEPT. U.S.A.

MADE AT SPRINGFIELD ARMORY

53

ORDNANCE DRAWING - SIZE B

NOTE:
SECTIONS MARKED "A" TO BE SOLID BLACK.

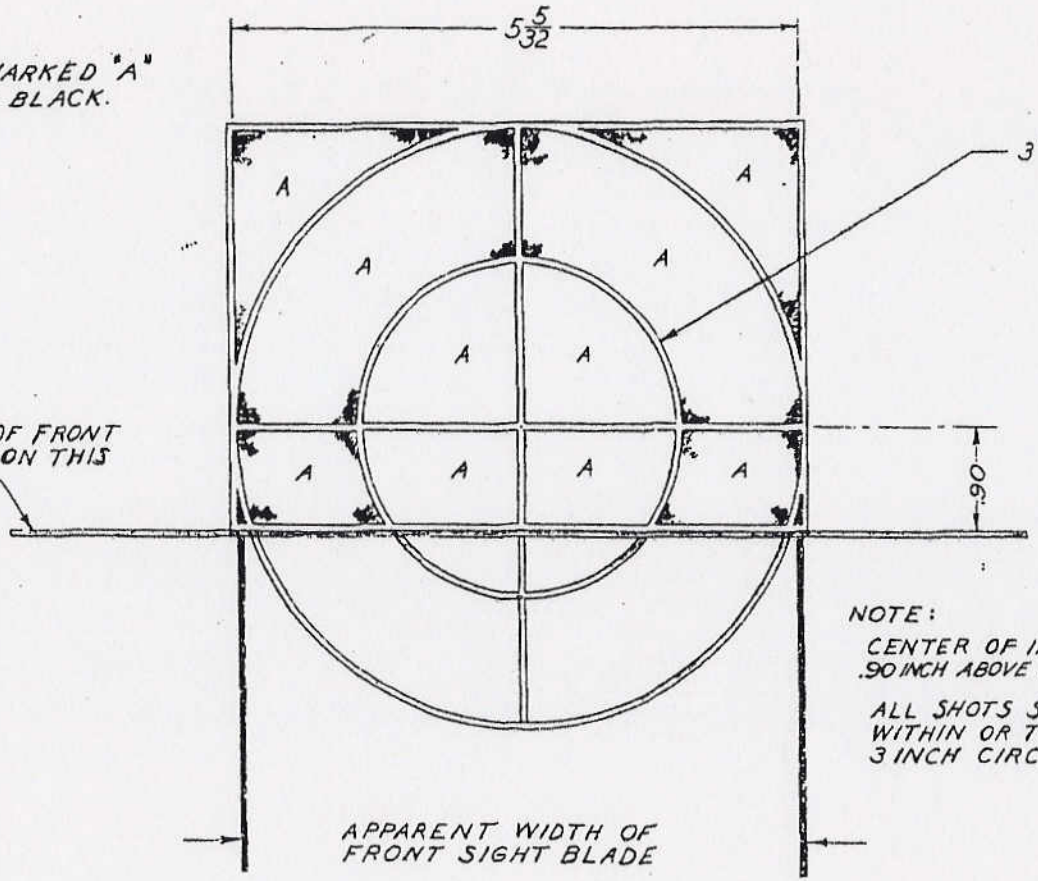

NOTE:
CENTER OF IMPACT SHALL BE .90 INCH ABOVE LINE OF SIGHT.

ALL SHOTS SHALL BE GROUPED WITHIN OR TOUCHING THE 3 INCH CIRCLE.

TARGETING DIAGRAM

RIFLE, SURVIVAL, CAL. 22, M4 (HORNET CARTRIDGE) FOR 50 YARD RANGE

ORIGINAL DATE OF DRAWING MARCH 12, 1951

REVISIONS

NO.	DATE	WAS (or ECO NO.)	BY	CHK
A	4-24-51	ECO #15167		

HEAT TREATMENT & PROTECTIVE FINISH

PHYSICAL PROPERTIES

YP	
TS	
EL 2	
RED.	
BH	
ROCK.	
WEIGHT	

DRAWING PERTAINS TO

DWG NO.	MAJOR ITEM
F7162911	RIFLE, SURVIVAL
	CAL. 22, M4

DO NOT ~~SCALE~~ APPLY PART NO. (As Specified)

SCALE 1/1

DRAFTSMAN RCA

SPECIFICATION W.L.M.

TRACED

CHECKED

ENGINEER R.J.L.

ENGINEER

TOLERANCES ON DIMENSIONS (Unless Otherwise Specified)
FROM FIN. SURFACES
DECIMAL ±
FRACTIONAL ±
ANGULAR ±
FROM UNFIN. SURFACES
FRACTIONAL ±
ANGULAR ±
SHARP CORNERS AND EDGES BROKEN TO APPROX. IN.

SUBMITTED

ORD DEPT U S ARMY

APPROVED BY ORDER OF THE CHIEF OF ORDNANCE
J. A. Smith

ORD DEPT U S ARMY

DWG SIZE B | 7265852 | ORDNANCE DEPT U S ARMY

DO NOT SCALE THIS DRAWING

PROTECTIVE FINISH
TYPE II CLASS A
U.S.A. 57-0-2

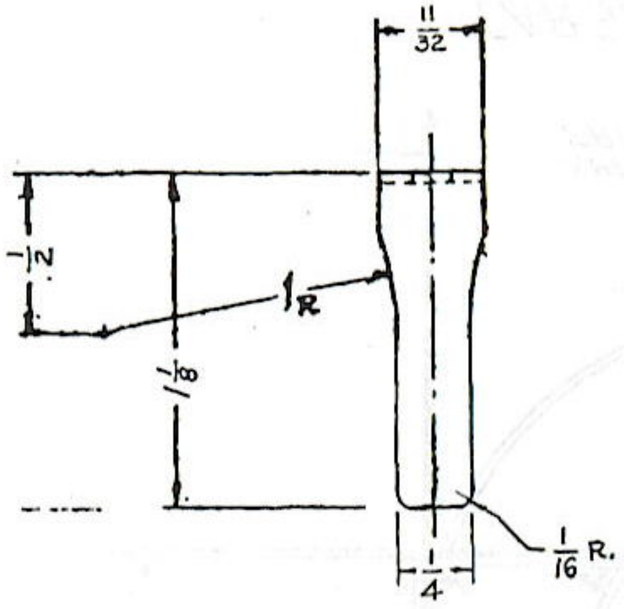

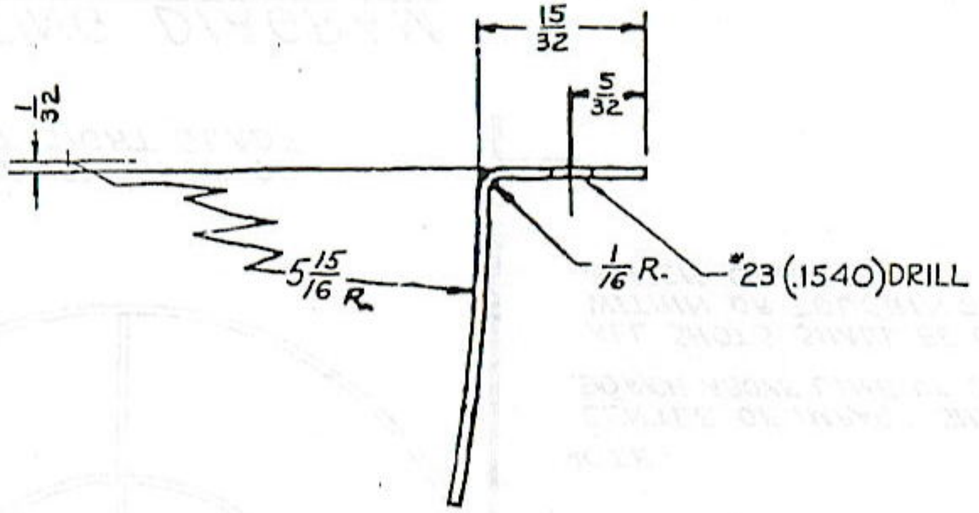

APPROVED PENDING
ORDNANCE DRAWING
LT. COL. [signature]
ORD. CORP.
DATE NOV. 22, 1950

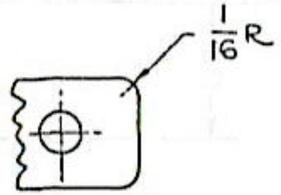

SPRING TEMPER

REMOVE ALL BURRS,
SHARP CORNERS & EDGES

ORD. PART NO. 7265855

350	1	SPRING STEEL	BIRMINGHAM #21 GA (.032)
ITEM	NO. REQD.	MATERIAL	SIZE

HARRINGTON & RICHARDSON ARMS CO.
WORCESTER, MASS.

MAGAZINE RELEASE SPRING REINFORCEMENT

.22 CAL. HORNET SURVIVAL WEAPON

MODEL 294

PART & NO. MAG. RELEASE SPRING REINF. 350	SCALE 2:1	OPER. NO. -1-
DESIGNED BY	DATE	DRAWING NO.
DETAILED BY R.S.B.	DATE 10-10-50	B-294-350
TRACED BY E.G.W.	DATE	
CHECKED BY [signature]	DATE Oct 13-50	
APPR. BY	DATE	SHEET 1 OF 1 SHEETS 57

B	VIEW ADDED, 1/16 R ADDED, #23 (.1544) DRILL WAS #27 (.1440) DRILL CONTOUR CHANGED, 1/2 WAS 17/32, 11/32 WAS 10/64, 1/32 ADDED, 18/32 WAS 17/32, 5/32 WAS 7/32.	S.A.	5-15-51
A	PROT. FINISH, NOTE , #27 (.1440) DRILL & REINFORCEMENT ADDED	S.A.	11-20-50
	REVISIONS	BY	DATE

UNLESS SPECIFIED OTHERWISE

DO NOT SCALE THIS DRAWING

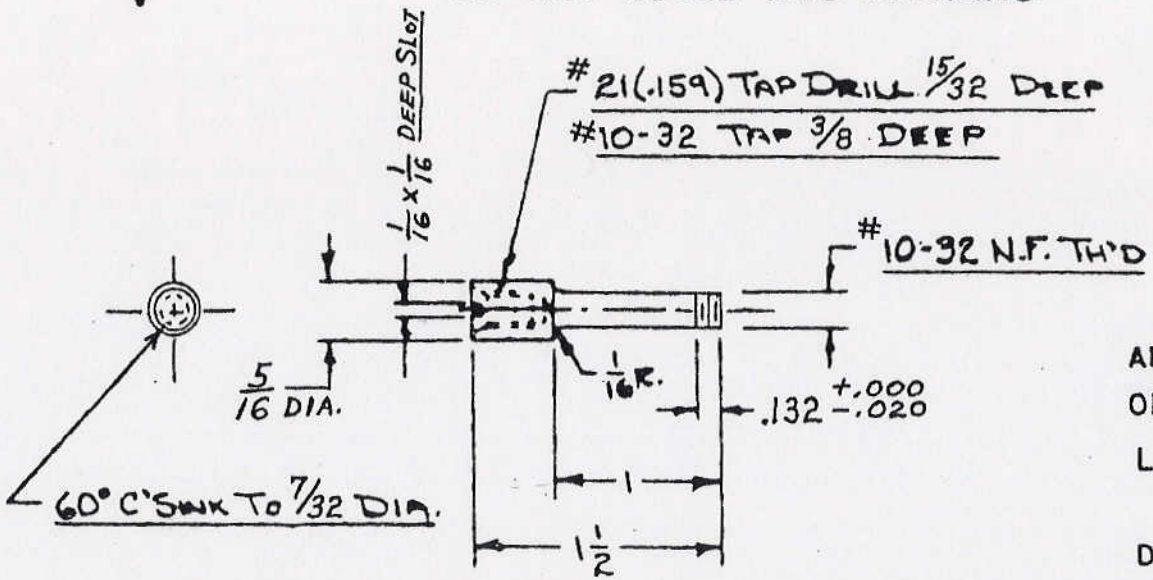

(A) PROTECTIVE FINISH
TYPE II CLASS A
U.S.A. 57-0-2

APPROVED PENDING
ORDNANCE DRAWING
LT. COL. [signature]
ORD. CORP.
DATE NOV. 22, 1950.

ORD. PART NO. 7265857

ITEM	NO. REQD.	MATERIAL (B)	SIZE
1		A.I.S.I.-B1113	5/16 DIA.

HARRINGTON & RICHARDSON ARMS CO.
WORCESTER, MASS.

(A) TAKE DOWN SCREW STUD
.22 CAL. HORNET SURVIVAL WEAPON
MODEL 294

C			
B	A294-335 WAS A294-330, AISI-B1113 WAS B-1113	S.A.	1-7-52
A	PROT. FINISH ADDED. "STUD" WAS "EXTENSION"	S.A.	11-20-50
	REVISIONS	BY	DATE

PART & NO. TAKE DOWN SCR. EXT. 4 | SCALE FULL | OPER. NO. ~

DESIGNED BY	DATE	DRAWING NO. (B)
DETAILED BY A.S.S.	DATE 10-9-50	A-294-335
TRACED BY	DATE	
CHECKED BY [signature]	DATE Oct 13-50	56
APPVD. BY	DATE	SHEET 1 OF 1 SHEETS

FRACTIONAL DIMENSIONS ± .005 UNLESS SPECIFIED OTHERWISE

DO NOT SCALE THIS DRAWING

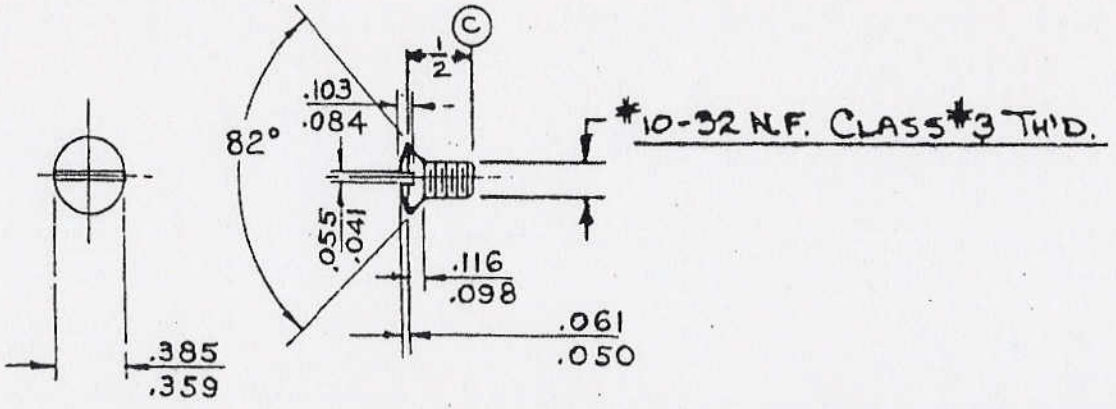

(A) PROTECTIVE FINISH
TYPE II CLASS A
U.S.A. 57-0-2

APPROVED PENDING
ORDNANCE DRAWING
LT. COL. F. J. McMorrow
ORD. CORP.
DATE NOV. 22, 1950.

ORD. PART NO. 7265858

ITEM	NO. REQD.	MATERIAL	SIZE
340	1	COMMERCIAL	#10-32 N.F. OVAL HEAD

HARRINGTON & RICHARDSON ARMS CO.
WORCESTER, MASS.

(A) TAKE DOWN SCREW STUD SCREW
.22 CAL. HORNET SURVIVAL WEAPON
MODEL 294

PART & NO. TAKE DOWN SCR. STUD #340 | SCALE FULL | OPER. NO. ~

C	LENGTH DIMENSION CHANGED	S.A.	5-15-51
B	HEAD DIMENSIONS ADDED	S.A	1-30-51
A	PROT. FINISH ADDED. "STUD SCREW" WAS "REAR".	S.A.	11-20-50
	REVISIONS	BY	DATE

DESIGNED BY		DATE	
DETAILED BY	A.S.B.	DATE	10-10-50
TRACED BY	E.G.W.	DATE	
CHECKED BY	[illegible]	DATE	Oct. 18-50
APPVD. BY		DATE	

DRAWING NO.
A-294-340
57

FRACTIONAL DIMENSIONS ± .002 UNLESS SPECIFIED OTHERWISE

SHEET 1 OF 1 SHEETS

DO NOT SCALE THIS DRAWING

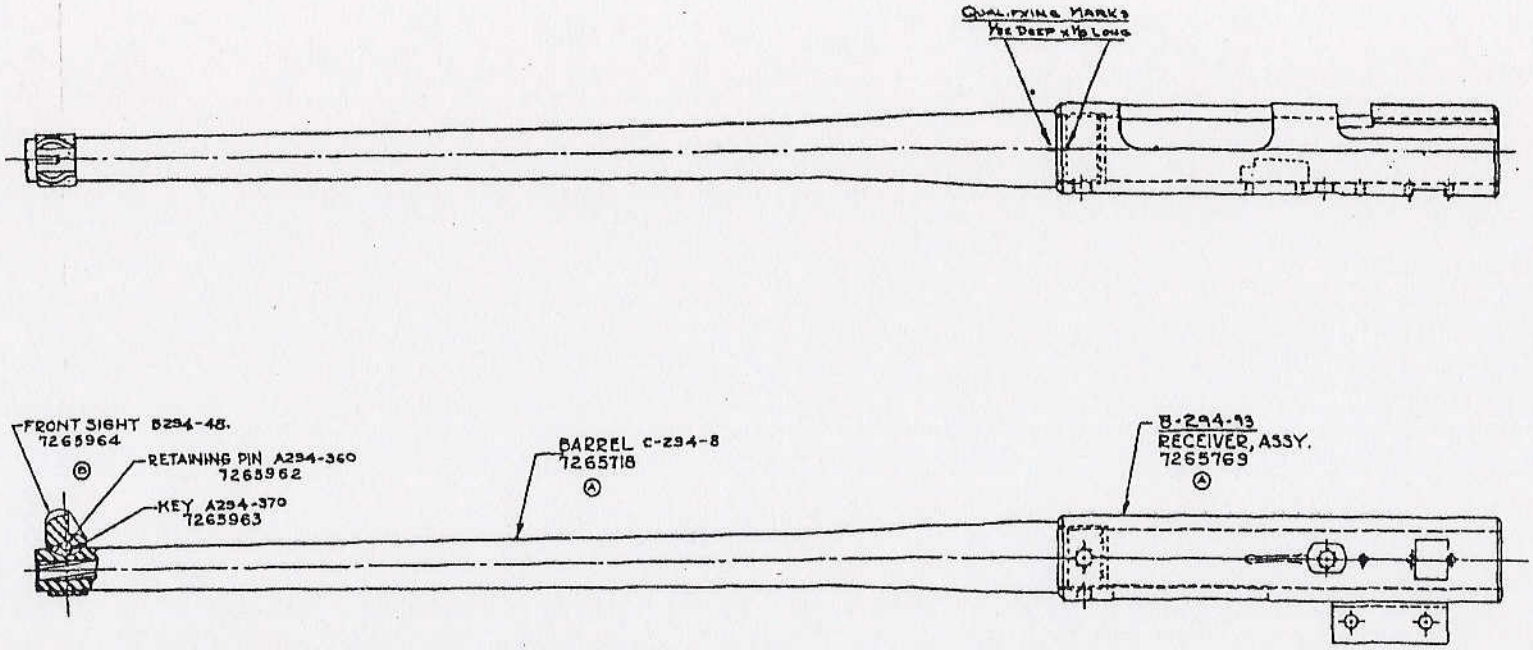

Ⓐ THE THREAD OF THE BARREL & RECEIVER SHALL BE QUALIFIED TO PERMIT:

1. SCREW BARREL INTO RECEIVER TILL IT SHOULDERS; THEN BACK OFF AS NECESSARY, BUT NOT TO EXCEED 15°, UNTIL QUALIFYING MARKS LINE UP AS SHOWN.
2. THE FLAT AT THE LEFT HAND SIDE OF THE BARREL THREAD SHALL LINE UP WITH THE TAPPED HOLE AT LEFT SIDE OF THE RECEIVER.

APPROVED PENDING ORDNANCE DRAWING.
LT. COL. [signature]
ORD. CORPS
DATE OCT 19, 1950

ORD. PART NO. 7265889

ITEM	NO. REQD.	MATERIAL	SIZE
		HARRINGTON & RICHARDSON ARMS CO. WORCESTER, MASS.	
		BARREL & RECEIVER ASSEMBLY .22 CAL. HORNET SURVIVAL WEAPON	
MODEL 294			

PART & NO. DRAWN	REC. PART NO. 127	SCALE FULL	DATE NO.
DESIGNED BY	DATE	DRAWING NO.	
DETAILED BY W.S.H.	DATE 9-9-50	C-294-127	
TRACED BY	DATE		
CHECKED BY	DATE 10-9-50		
APPVD. BY	DATE	SHEET 1 OF 1 SHEETS	

LTR	REVISIONS	BY	DATE
C	CLASSIFICATION CANCELLED BY AUTHORITY OF OCD 11-951	S.A.	10-19-50
B	DEPICTION CHANGED, ORD. PART NO'S & FRONT SIGHT ADDED	S.A.	1-30-51
A	ADDED ORD. PART NOS. & NOTE. REVISED 6-29-51	S.A.	10-13-50

FRACTIONAL DIMENSIONS ± .005 UNLESS SPECIFIED OTHERWISE

DO NOT SCALE THIS DRAWING

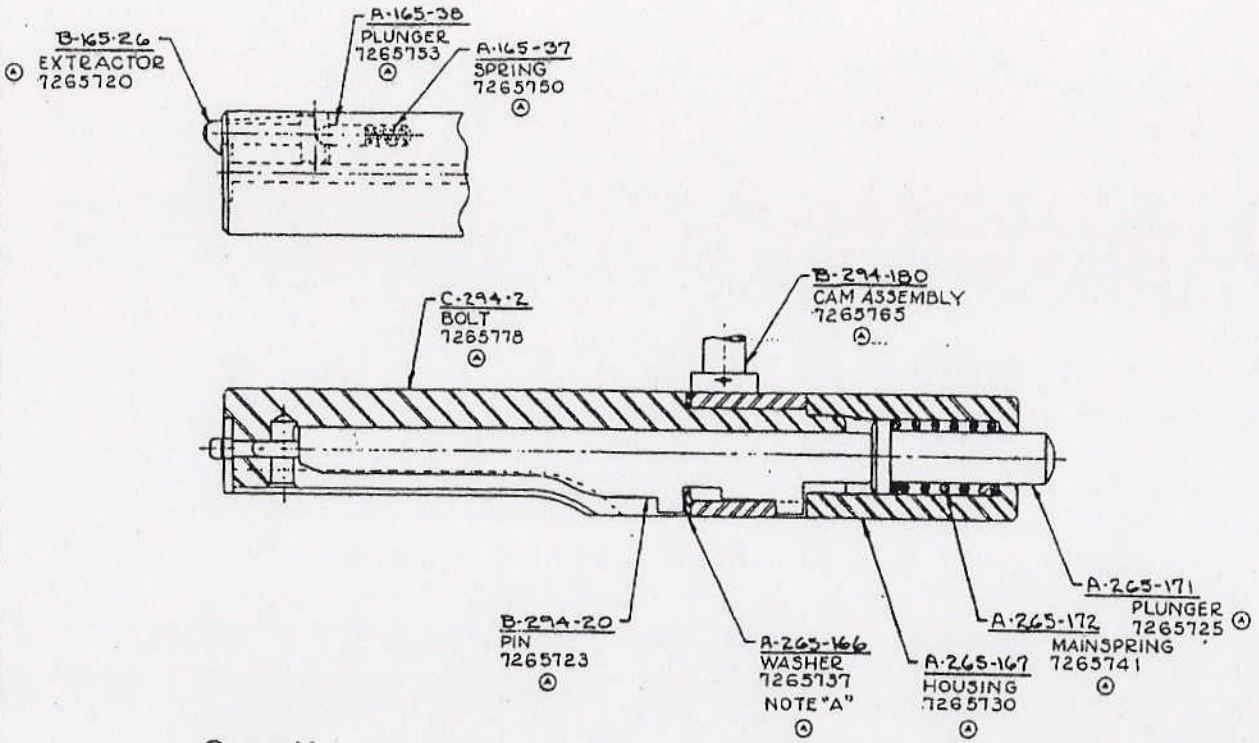

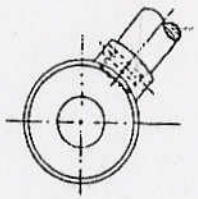

Ⓐ NOTE: "B"
THE FIRING PIN SHALL BE FREE FROM ANY
Ⓑ BINDING ACTION ✓

Ⓐ NOTE: "A"
PROPER THICKNESS OF WASHER, BREECH SPACE
Ⓑ SHALL BE SELECTED AFTER TARGETING TO OBTAIN THE REQUIRED BREECH SPACE.

APPROVED PENDING
ORDNANCE DRAWING
LT. COL. [signature]
ORD. CORP
DATE OCT 19 1950

ORD. PART NO. 7265891

ITEM	NO. REQD.	MATERIAL	SIZE

HARRINGTON & RICHARDSON Arms Co.
WORCESTER, Mass.

BOLT ASSEMBLY
.22 CAL. HORNET SURVIVAL WEAPON
MODEL 254

PART & NO. Bolt Assem. #141		SCALE 2:1	SPEC. NO.
DESIGNED BY	DATE	DRAWING NO.	
DETAILED BY A.S.T.	DATE 9-9-50	C-294-141	
TRACED BY	DATE		
CHECKED BY	DATE 9/15/50		
APPD. BY	DATE	SHEET 1 OF 1 SHEETS	

C	CLASSIFICATION CANCELLED BY AUTHORITY OF OCM 33331	S.A.	18 SEPT 51
B	CHANGED, NOTE "A" & NOTE "B"	S.A.	1-2-51
A	ADDED, ORDNANCE DRAWING NUMBERS & NOTE "A" & "B"	S.A.	10-13-50
	REVISIONS	BY	DATE

FRACTIONAL DIMENSIONS ± .005 UNLESS SPECIFIED OTHERWISE