DO NOT SCALE THIS DRAWING

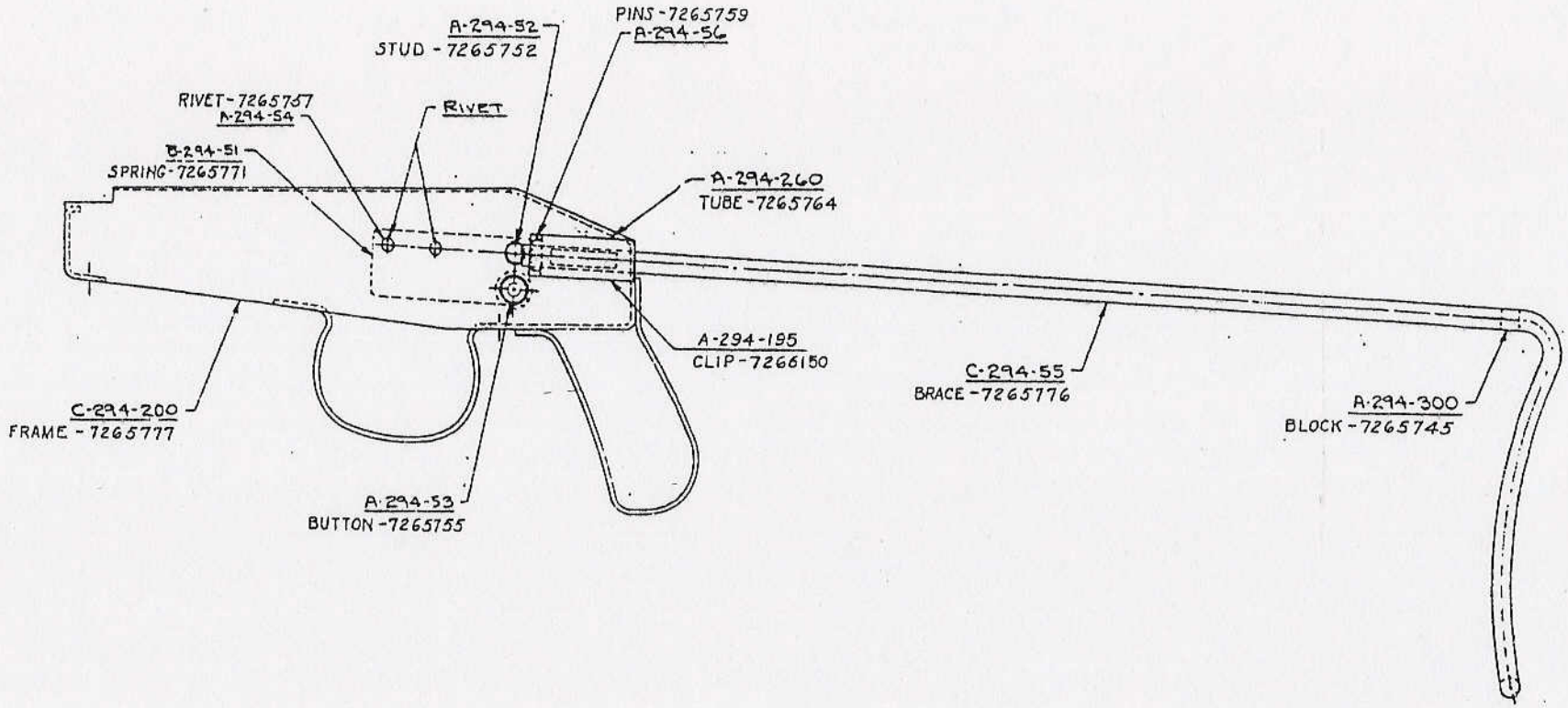

APPROVED PENDING
ORDNANCE DRAWING
LT. COL. [signature]
ORD. CORP
DATE OCT 19 1950

ORD. PART NO. 7265893

ITEM	NO. REQD.	MATERIAL	SIZE

HARRINGTON & RICHARDSON ARMS CO.
WORCESTER, MASS.

FRAME ASSEMBLY
.22 CAL. HORNET SURVIVAL WEAPON
MODEL 294

PART & NO. FRAME ASSEMBLY #220		SCALE FULL	OPER. NO. ~
DESIGNED BY	DATE	DRAWING NO.	
DETAILED BY A.S.B.	DATE 9-7-50	C-294-220	
TRACED BY	DATE		
CHECKED BY [illegible]	DATE SEPT. 8-50		
APPVD. BY	DATE	SHEET 1 OF 1 SHEETS	

	REVISIONS	BY	DATE
C	CLASSIFICATION CANCELLED BY AUTHORITY OF OCM 33331	S.A.	15 SEP 54
B	CHANGED; A294-190 TO A294-195, 7265742 TO 7266150	S.A.	1-7-52
A	REMOVED NOTES SILVER SOLDER, ADDED: GRD. PT. NOS.	S.A.	10-13-50

FRACTIONAL DIMENSIONS ± .005 UNLESS SPECIFIED OTHERWISE

DO NOT SCALE THIS DRAWING

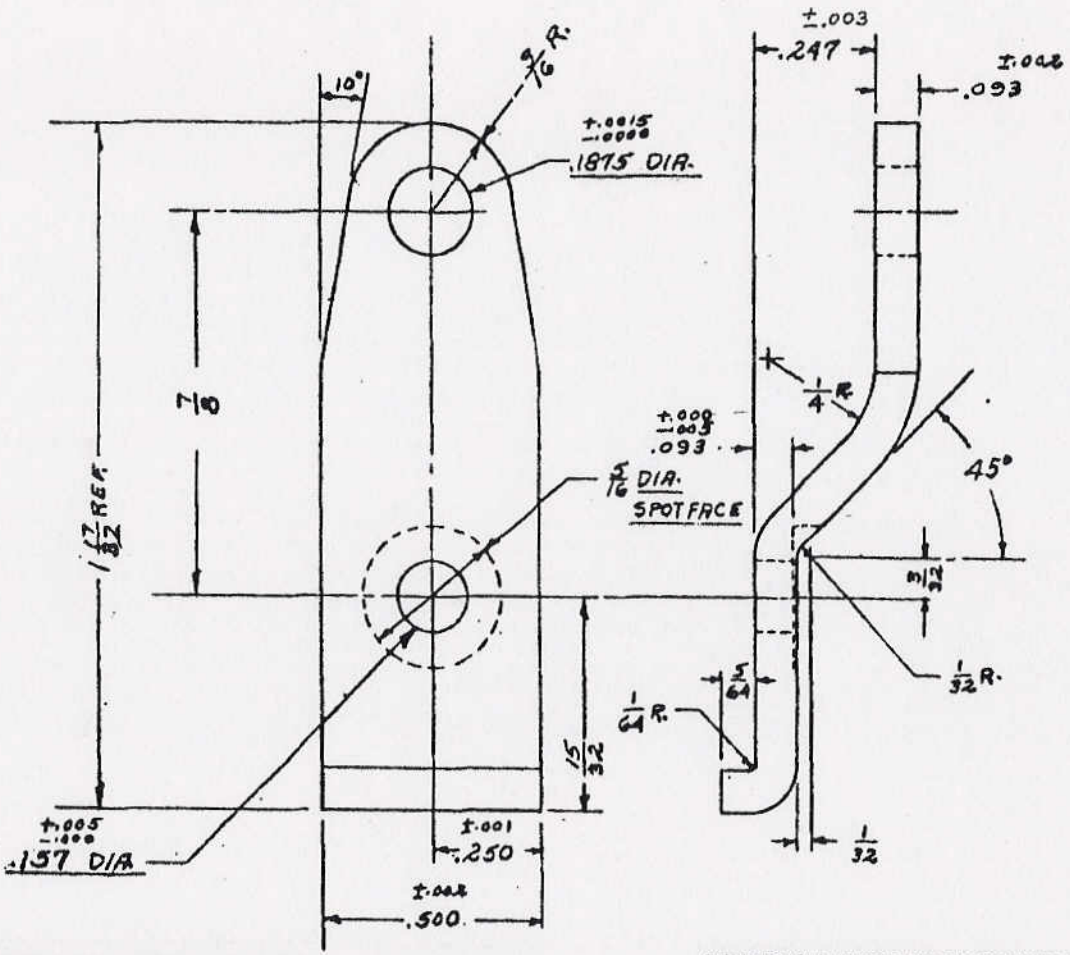

PROTECTIVE FINISH
TYPE II CLASS A
AT ASSEMBLY
7265773

ACTUAL SIZE

APPROVED PENDING
ORDNANCE DRAWING
LT. COL. F. McClintock
ORD. CORP
DATE OCT 12 1950

REMOVE ALL BURRS, SHARP CORNERS AND EDGES.

E	CLASSIFICATION CANCELLED BY AUTHORITY OF OCM 38331	S.A.	8 SEP 54
D	.157 DIA +.005 -.000 WAS .157 DIA +.003 -.000	S.A.	1-2-51
C	ADDED; PROT. FIN. & NOTE. REMOVED NOTE BLUED.	S.A.	10-13-50
B	1.5/8 WAS 1.47/64 1/8 WAS 3/32	JBL	10-11-49
A	1.5/8 WAS 1.5/8	JBL	10-3-49
	REVISIONS	BY	DATE

FRACTIONAL DIMENSIONS ±. UNLESS SPECIFIED OTHERWISE

ORD. PART NO. 7265894

ITEM	NO. REQD.	MATERIAL	SIZE
89	1	A.I.S.I. 1010	.093 +.012 STOCK

HARRINGTON & RICHARDSON ARMS CO.
WORCESTER, MASS.

SAFETY LEVER
"GAMESTER" 12 GA. BOLT ACTION SHOTGUN
MODEL 348

PART & NO. SAFETY LEVER "89		SCALE 4:1	OPER. NO. ~
DESIGNED BY	DATE	DRAWING NO.	
DETAILED BY JBL	DATE Aug. 30-49	B-348-89	
TRACED BY	DATE		
CHECKED BY JBL	DATE 8.30.49		
APPD. BY	DATE	SHEET 1 OF 1 SHEETS	87

DO NOT SCALE THIS DRAWING

DEC 6 1951

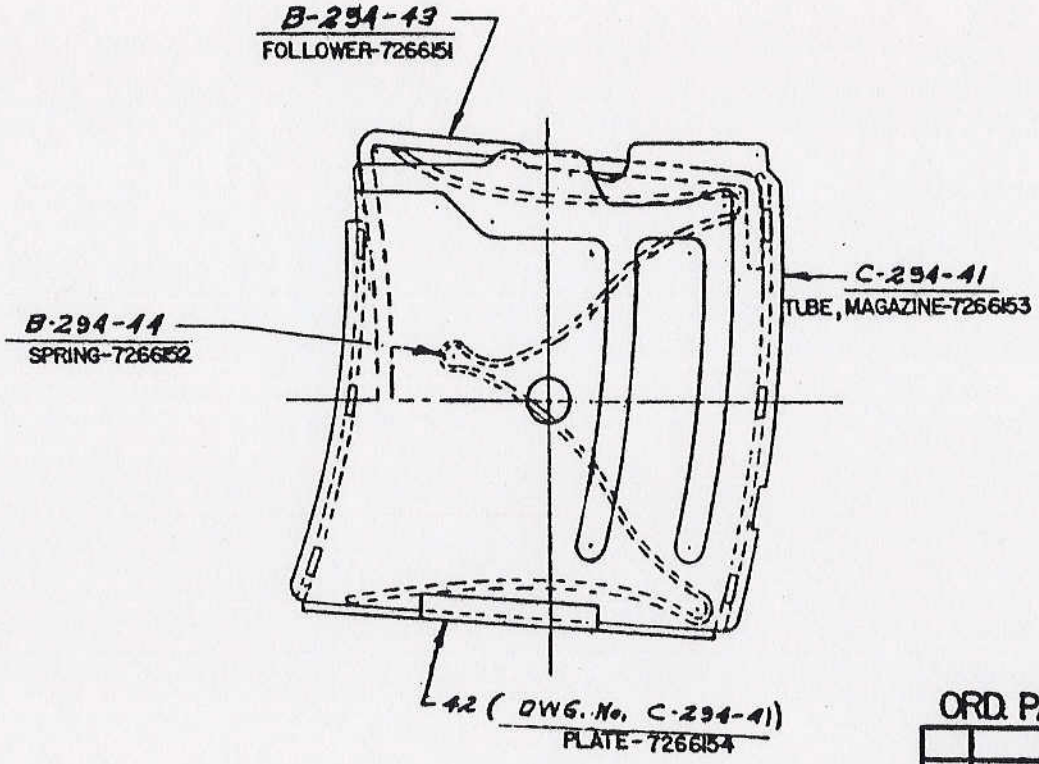

APPROVED PENDING ORDNANCE DRAWING L.J.L.
LT. COL. [signature]
ORD. CORP.
DATE JAN. 7, 1952

ORD. PART NO. 7265895

ITEM	NO. REQD.	MATERIAL	SIZE

HARRINGTON & RICHARDSON ARMS CO.
WORCESTER, MASS.

MAGAZINE ASSEMBLY
.22 CAL. HORNET SURVIVAL WEAPON

MODEL 294

PART & NO. REQD. ASSY. 61 | SCALE 2:1 | OPER. NO.

DRAWING NO. B-294-61

D			
C			
B	ADDED; SUPERSEDES OLD DWG. W/O CHANGE	S.A.	1-7-52
	REVISIONS	BY	DATE

FRACTIONAL DIMENSIONS ± .005 UNLESS SPECIFIED OTHERWISE

~~SUPERSEDES DWG. SAME No. DATED 4-1-50~~

62

DO NOT SCALE THIS DRAWING

Ⓐ PROTECTIVE FINISH
TYPE II CLASS A
U.S.A. 57-0-2

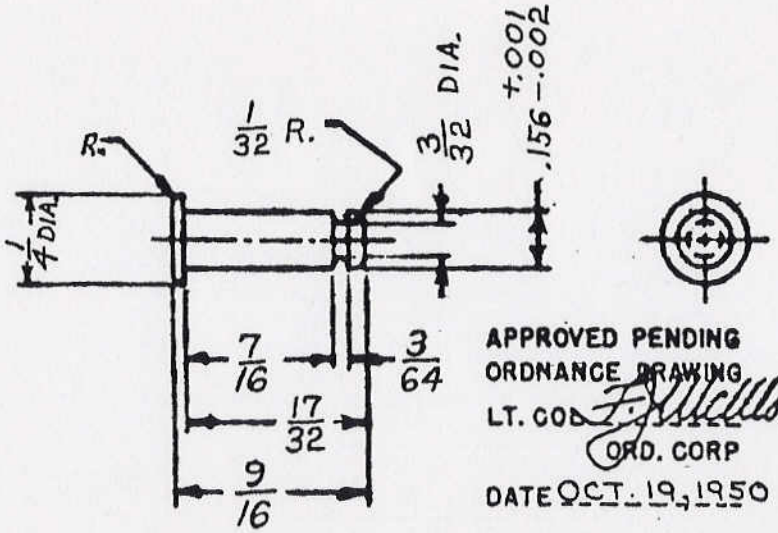

APPROVED PENDING
ORDNANCE DRAWING
LT. COL. F. McClintock
ORD. CORP
DATE OCT. 19, 1950

ORD. PART NO. 7265896

CYANIDE HARDEN

29	1	A.I.S.I. - C1018 Ⓑ	
ITEM	NO. REQD.	MATERIAL	SIZE

HARRINGTON & RICHARDSON ARMS CO.
WORCESTER, MASS.

TRIGGER PIN

.22 CAL. HORNET SURVIVAL WEAPON

MODEL 294

NAME & NO. Trigger Pin - 29	SCALE 2/1	SPEC. NO.
DESIGNED BY	DATE	DRAWING NO.
DETAILED BY A.S.B.	DATE 7-10-50	A-294-29
TRACED BY	DATE	
CHECKED BY [illegible]	DATE 7/19/50	63
APPD. BY	DATE	SHEET 1 OF 1 SHEETS

	REVISIONS	BY	DATE
C	CLASSIFICATION CANCELLED BY AUTHORITY OF OCM 33257	S.A.	15SEP54
B	A1S1-C1018 WAS B-1113	S.A.	1-7-52
A	PROTECTIVE FINISH ADDED.	S.A.	10-13-50

FRACTIONAL DIMENSIONS ± .005 UNLESS SPECIFIED OTHERWISE

DO NOT SCALE THIS DRAWING

Ⓐ PROTECTIVE FINISH
TYPE II CLASS A
U.S.A. 57-0-2

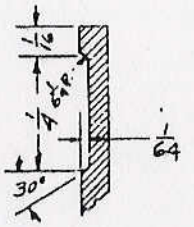

SECTION A-A

APPROVED PENDING
ORDNANCE DRAWING
LT. COL. F. McMorrow
ORD. CORP
DATE OCT. 19, 1950

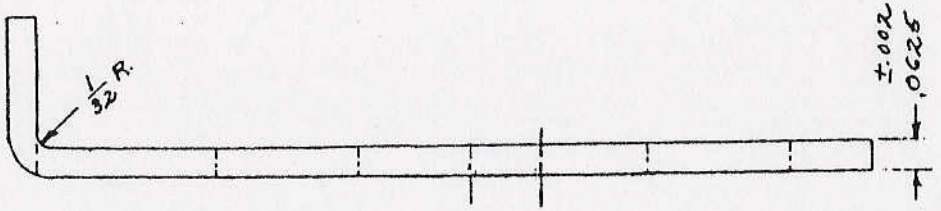

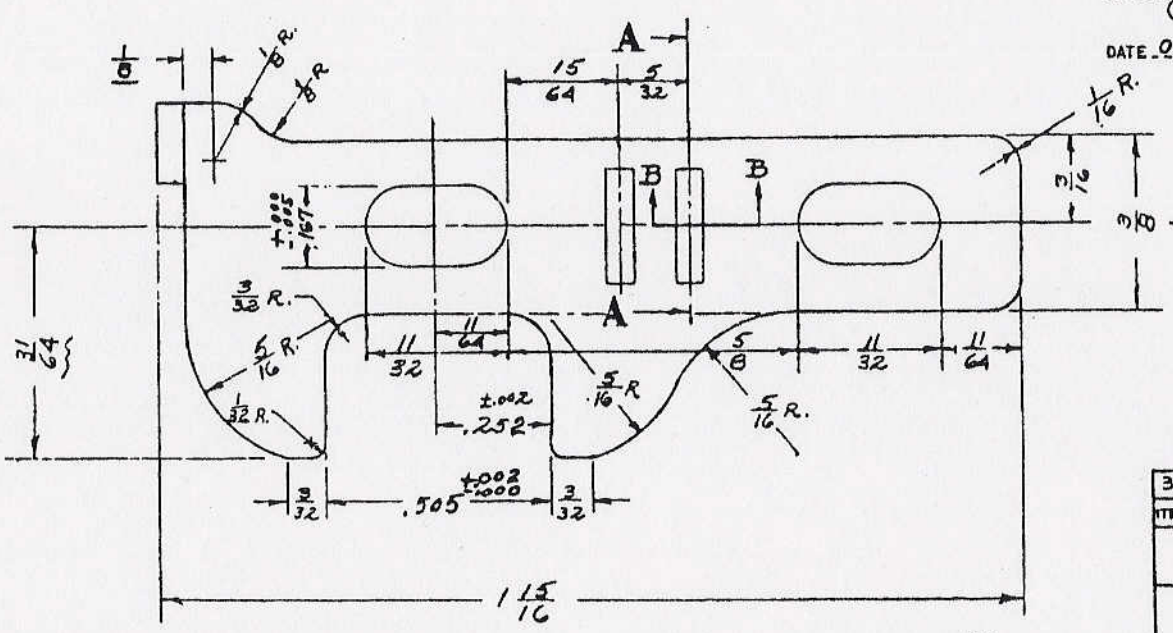

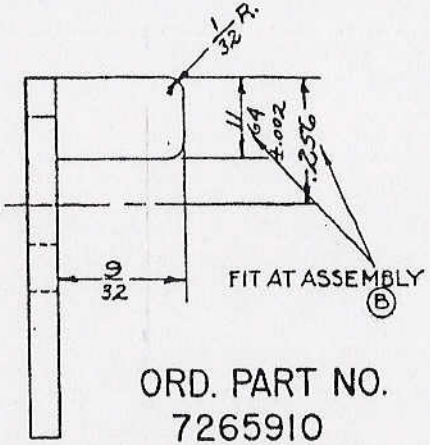

ORD. PART NO.
7265910

Ⓐ REMOVE ALL BURRS, SHARP CORNERS & EDGES.

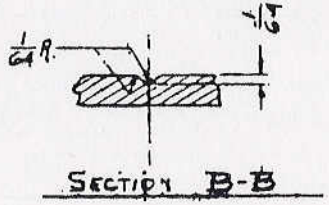

SECTION B-B

ITEM	NO. REQ'D.	MATERIAL	SIZE
30	1	AISI 1010	1/16 THICK

HARRINGTON & RICHARDSON ARMS CO.
WORCESTER, MASS.

SAFETY LEVER SLIDE

MODEL 865

PART & NO. SAFETY LEVER 32	SCALE 4:1	OPER. NO. ~	
DESIGNED BY	DATE	DRAWING NO.	
DETAILED BY [illegible]	DATE NOV. 11-48	B-865-32	
TRACED BY	DATE		
CHECKED BY [illegible]	DATE DEC. 16-48		
APPVD. BY	DATE	SHEET 1 OF 1 SHEETS	

	REVISIONS	BY	DATE
C	CLASSIFICATION CANCELLED BY AUTHORITY OF OCN 35551	S.A.	15 SEP 54
B	ADDED; NOTE, FIT AT ASSEMBLY"	S.A	1-2-51
A	PROTECTIVE FINISH ADDED; NOTE ADDED.	S.R.	10-13-50

FRACTIONAL DIMENSIONS ± .005 UNLESS SPECIFIED OTHERWISE

64

DO NOT SCALE THIS DRAWING

Ⓐ PROTECTIVE FINISH
TYPE II CLASS A
AT ASSEMBLY 7265893

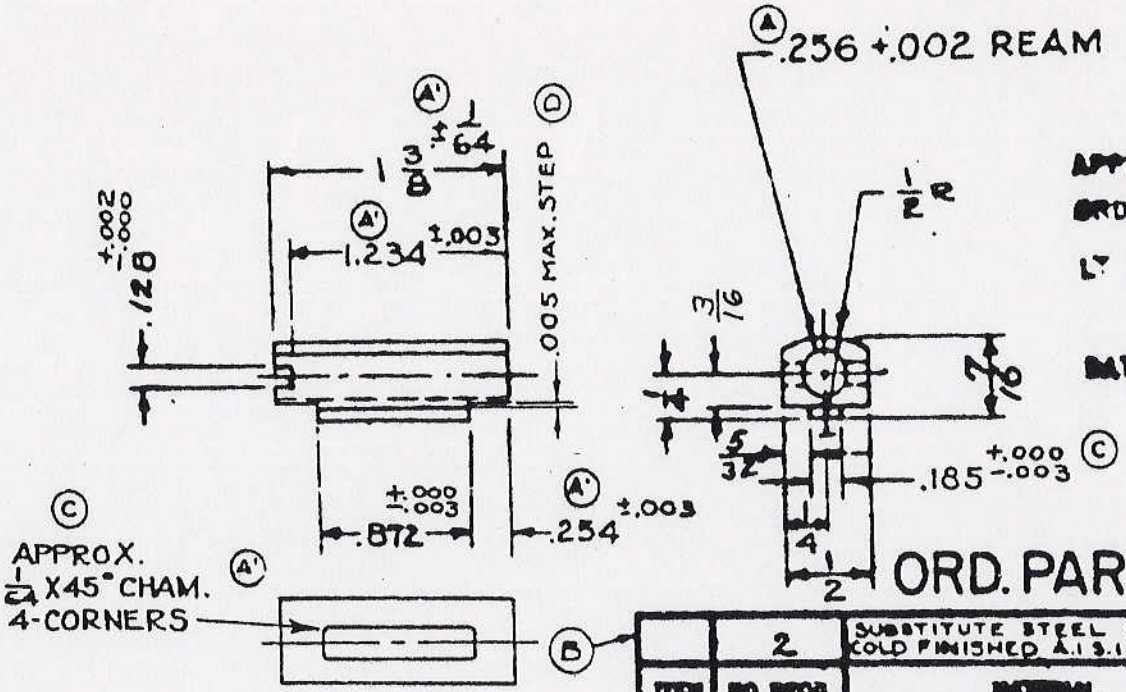

APPROVED PENDING
ORDNANCE DRAWING
LT. COL. [signature]
ORD. CORPS
DATE OCT. 19, 1950.

DUPLICATE

ORD. PART NO. 7265913

ITEM	NO. REQD.	MATERIAL	SIZE
	2	SUBSTITUTE STEEL B-1113 COLD FINISHED A.I.S.I. 1020	½ Sq.

HARRINGTON & RICHARDSON ARMS CO.
WORCESTER, MASS.

BRACE TUBE

.22 CAL. HORNET SURVIVAL WEAPON

MODEL 294

FIRST & NO. BRACE TUBE	# 260	SCALE Full	OPER. NO. ~
DESIGNED BY	DATE	DRAWING NO. 65	
DETAILED BY B.S.S.	DATE 7-28-50	A 294-260	
TRACED BY	DATE		
CHECKED BY C. B.	DATE 8-18-50		
APPD. LT.	DATE	SHEET 1 OF 1 SHEETS	

E'	CLASSIFICATION CANCELLED BY AUTHORITY OF OCM 33331	S.A.	15SEP54
	SUPERSEDES DWG SAME NO. DATED 2-8-50		
D	.005 MAX. STEP, ADDED.	S.A.	4-11-51
C	NOTE ADDED: .185 +.000 -.003 WAS .187 +.000 -.003	S.A.	3-12-51
B	MAT. ADDED, COLD FINISHED A.I.S.I. 1020, SUBSTITUTE STEEL B-1113	S.A.	1-30-51
A	PROT. FINISH ADDED, .256 +.002 REAM WAS LETTER F (.257) DRILL	S.A.	10-13-50
	A' .004 MAX. REMOVED, 2 PL. TOL. ADDED, REVISIONS LOST DUE TO [illegible] ADDED A.H. 9-11-50	BY	DATE

FRACTIONAL DIMENSIONS ± .008 UNLESS OTHERWISE SPECIFIED

-V

DO NOT SCALE THIS DRAWING

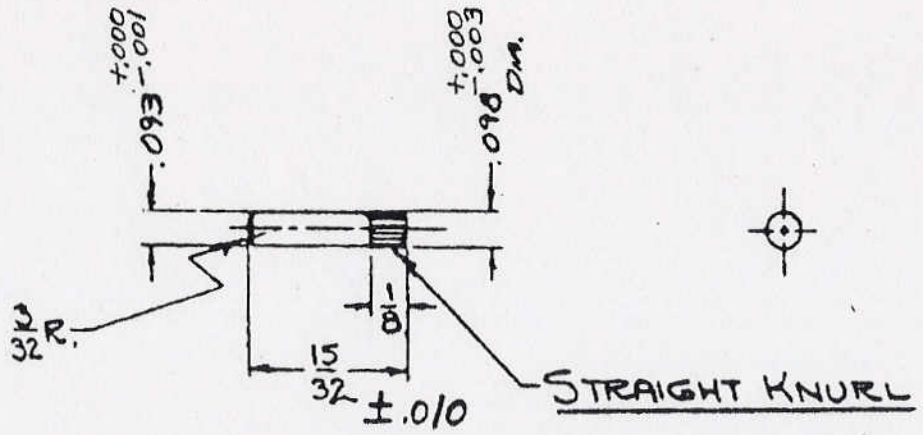

APPROVED PENDING
ORDNANCE DRAWING
COL. F. McClellan
ORD. CORP
DATE JAN. 29, 1951

CYANIDE HARDEN

PROT. FINISH
TYPE II CLASS A OR B
U.S.A. SPEC. 57-0-2

ORD. PART NO. 7265962

		A.I.S.I. B-1113	.093 +.000 -.001 DIA.
ITEM	NO. REQD.	MATERIAL	SIZE

HARRINGTON & RICHARDSON ARMS CO.
WORCESTER, MASS.

FRONT SIGHT RETAINING PIN

MODEL 294

PART & NO. FRONT SIGHT RET PIN V-A		SCALE 2:1	OPER. NO.
DESIGNED BY	DATE	DRAWING NO. 66	
DETAILED BY A.S.B.	DATE 11-17-50	A-294-360	
TRACED BY	DATE		
CHECKED BY H.E.M.	DATE 1-5-51		
APPVD. BY	DATE	SHEET 1 OF 1 SHEETS	

	REVISIONS	BY	DATE
C			
B			
A			

FRACTIONAL DIMENSIONS ± .005 UNLESS SPECIFIED OTHERWISE

DO NOT SCALE THIS DRAWING

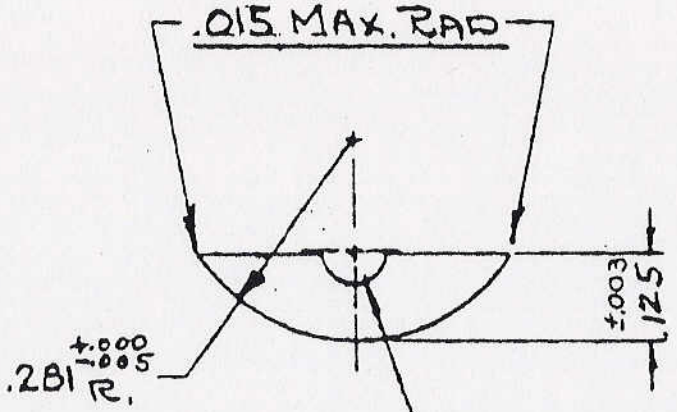

NOTE:- SHEARED EDGES MUST BE SMOOTH. CORNERS AND EDGES SHALL NOT BE ROUNDED TO EXCEED .010 RAD. UNLESS OTHERWISE SPECIFIED.

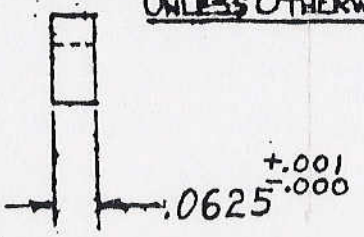

APPROVED PENDING
ORDNANCE DRAWING
COL. F. McMorrow
ORD. CORP
DATE JAN. 29, 1951

ORD. PART NO. 7265963

ITEM	NO. REQD.	MATERIAL	SIZE
		(A) SUBSTITUTE AISI C-1010	
370	1	AISI C-1020	

HARRINGTON & RICHARDSON ARMS CO.
WORCESTER, MASS.

FRONT SIGHT KEY

MODEL 294

PART & NO. FRONT SIGHT KEY #370 | SCALE 4:1 | OPER. NO. ~

C				DESIGNED BY	DATE
B				DETAILED BY A.C.S.	DATE 1-2-51
A	SUBSTITUTE MAT. ADDED	SA	1-7-52	TRACED BY	DATE
	REVISIONS	BY	DATE	CHECKED BY H.E.M.	DATE 1-5-51
FRACTIONAL DIMENSIONS ± .005 UNLESS SPECIFIED OTHERWISE				APPVD. BY	DATE

DRAWING NO. 67

A-294-370

SHEET 1 OF 1 SHEETS

DO NOT SCALE THIS DRAWING

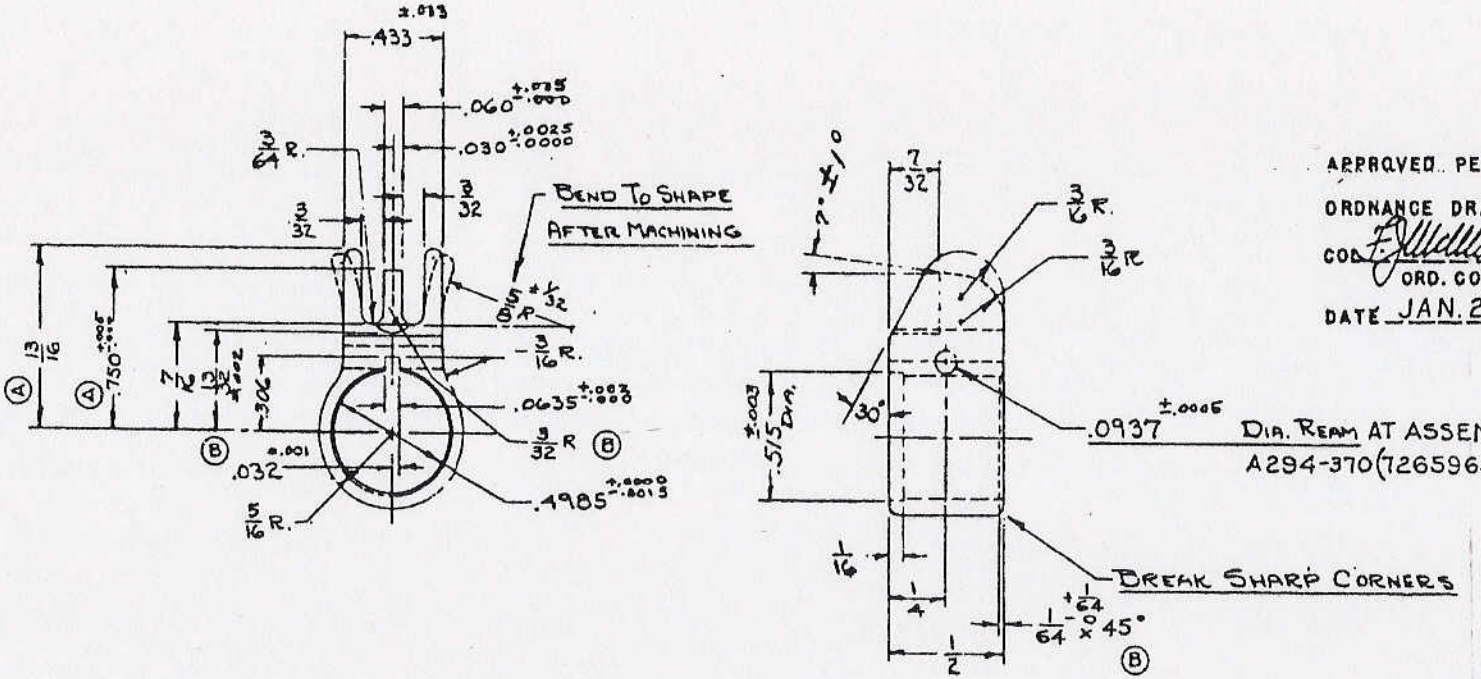

APPROVED PENDING
ORDNANCE DRAWING
COL. F. J. McMorrow
ORD. CORP
DATE JAN. 29, 1951

ORD. PART NO. 7265964

ITEM	NO. REQD.	MATERIAL	SIZE
48	1	AISI - C1018	

HARRINGTON & RICHARDSON ARMS CO.
WORCESTER, MASS.

FRONT SIGHT

MODEL 294

PROT. FINISH
TYPE II CLASS A
USA SPEC 57-0-2

PART & NO. FRONT SIGHT #48		SCALE 2:1	OPER. NO.
DESIGNED BY	DATE	DRAWING NO.	
DETAILED BY A.S.B.	DATE 11-17-50	B-294-48	
TRACED BY	DATE		
CHECKED BY HEM	DATE 1-5-51		
APPVD. BY	DATE	SHEET 1 OF 1 SHEETS	

	REVISIONS	BY	DATE
C			
B	ADDED 1/64 X 45° (A) TRINK 3-15-51, ADDED 1/8 R, 13/32-NO DATE PER HER PRINT, 3/32 R WAS 1/8 R (C) [illegible] 10-23-51	S.A.	11-9-51
A	13/16 WAS 3/4 ; .750 +.005 -.000 WAS .687 +.005 -.000 (A.S.B. 3-5-51)	S.A.	3-22-51

FRACTIONAL DIMENSIONS ±.010 UNLESS SPECIFIED OTHERWISE

THIS DWG. SUPERSEDES DWG. NO. A-294-48 DATED 3-20-50

-V

DO NOT SCALE THIS DRAWING

DEC 6 1951

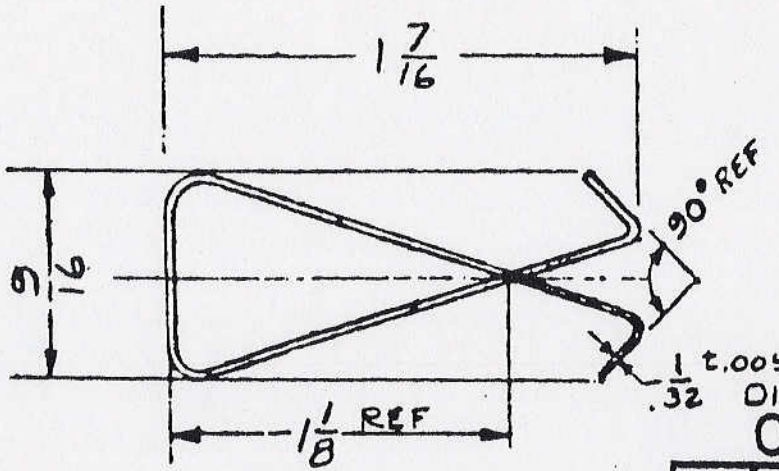

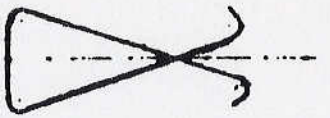

ACTUAL SIZE

ORD. PART NO. 7266150

ITEM	NO. REQD.	MATERIAL	SIZE
	2	SILVER SOLDER	1/32 ±.005 DIA.

HARRINGTON & RICHARDSON ARMS CO.
WORCESTER, MASS.

SILVER SOLDER CLIP
(BRACE TUBE)

MODEL 294 - 22 CAL HORNET SURVIVAL WEAPON

PART & NO. SILVER SOLDER CLIP 195 | SCALE 2/1 | OPER. NO. —

APPROVED PENDING
ORDNANCE DRAWING
LT. COL. [signature]
ORD. CORP.
DATE JAN. 7, 1952

	REVISIONS	BY	DATE
C			
B			
A			

DESIGNED BY | DATE
DETAILED BY Powers | DATE 11-28-1951
TRACED BY | DATE
CHECKED BY [illegible] | DATE NOV 29 '51
APPVD. BY | DATE

DRAWING NO. A-294-195

FRACTIONAL DIMENSIONS ± .005 UNLESS SPECIFIED OTHERWISE

SHEET 1 OF 1 SHEETS

DRAWING NO. 195

4-9

DO NOT SCALE THIS DRAWING

DEC 6 1951

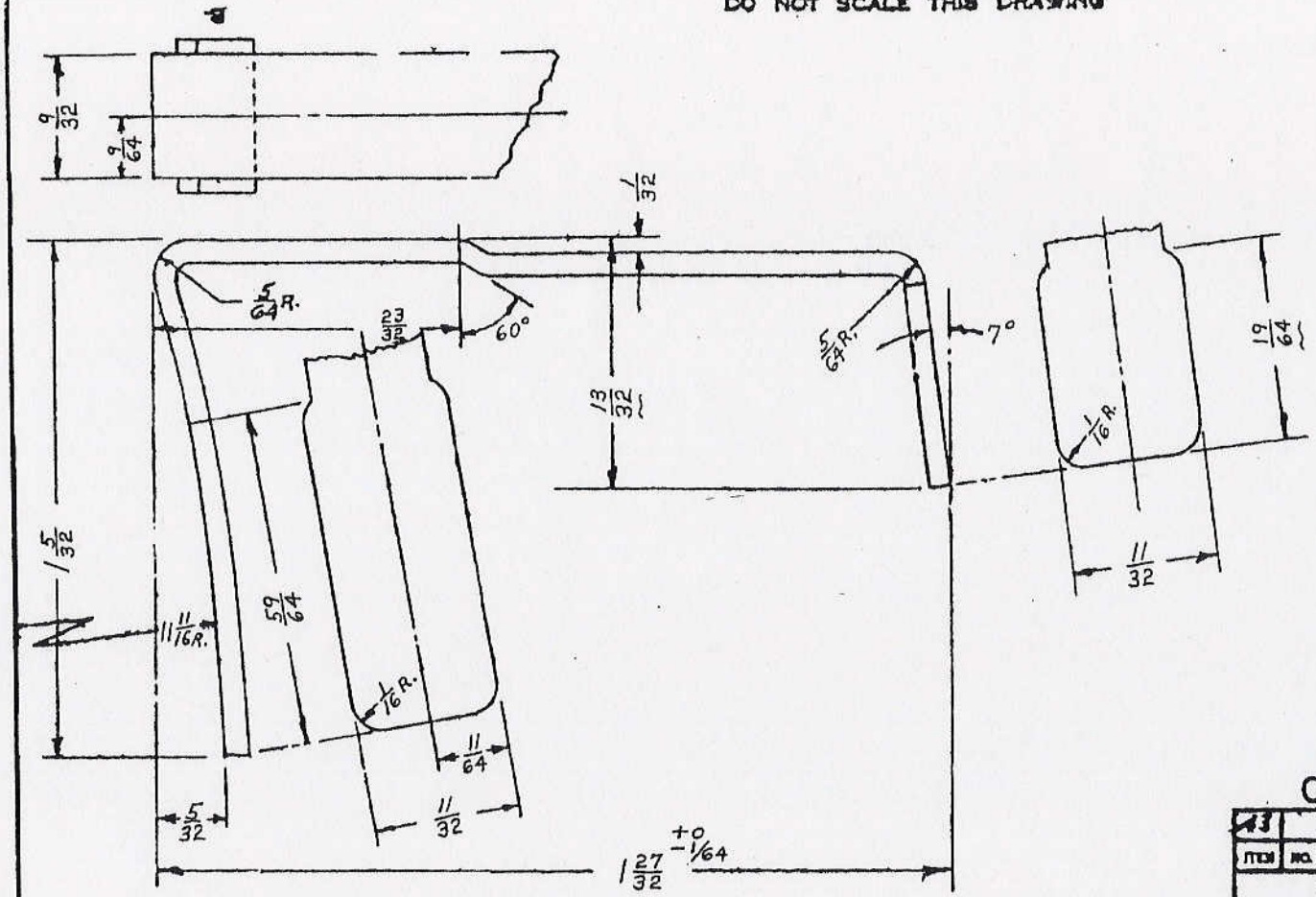

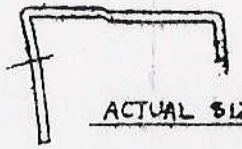

PROTECTIVE FINISH
OXIDE BLACK TYPE III
CLASS A GRADE I
U.S.A. 57-0-2

APPROVED PENDING
ORDNANCE DRAWING
LT. COL.
ORD. CORP.
DATE JAN. 7, 1952

ORD. PART NO. 7266151

ITEM	NO. REQD.	MATERIAL	SIZE
43		A.I.S.I. C-1020	

HARRINGTON & RICHARDSON ARMS CO.
WORCESTER, MASS.

MAGAZINE FOLLOWER
CAL. HORNET SURVIVAL WEAPON

SCALE 4:1

DRAWING NO.
B-294-43

2-6-50

REVISIONS | BY | DATE

UNLESS SPECIFIED OTHERWISE

70

DO NOT SCALE THIS DRAWING

DEC 6 1951

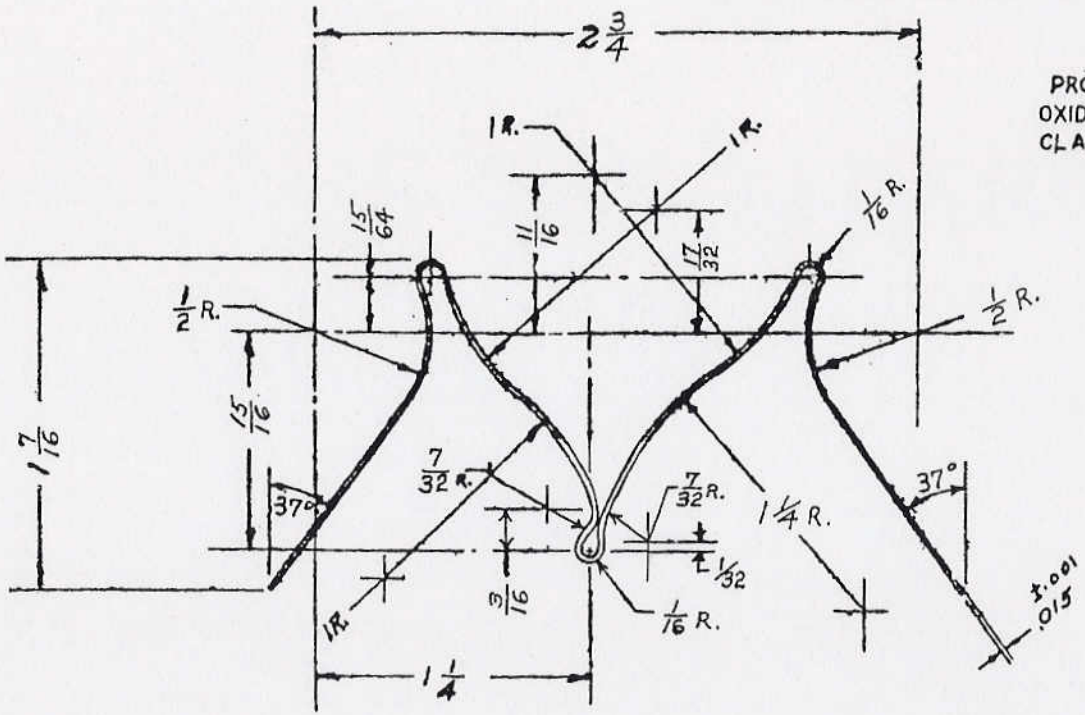

PROTECTIVE FINISH
OXIDE BLACK TYPE III
CLASS A GRADE I
U.S.A. 57-0-2

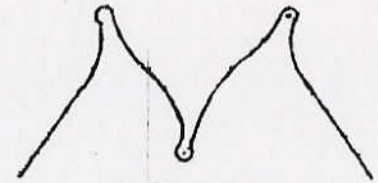

ACTUAL SIZE

APPROVED BENDING ORDNANCE DRAWING L.J.L.
LT. COL. W. E. Rogers
ORD. CORP.
DATE JAN. 7, 1952

SPRING TEMPER

ORD. PART NO. 7266152 (A)

ITEM	NO. REQD.	MATERIAL	SIZE
44		SPRING STEEL	.015 ±.001

HARRINGTON & RICHARDSON ARMS CO.
WORCESTER, MASS.

MAGAZINE SPRING
.22 CAL. HORNET SURVIVAL WEAPON

SCALE 2:1

DRAWING NO. B 294-44

	.015 ±.001 WAS BIRMINGHAM #27 (.016) GA		
	REVISIONS	BY	DATE

FRACTIONAL DIMENSIONS ± .005 UNLESS SPECIFIED OTHERWISE

71

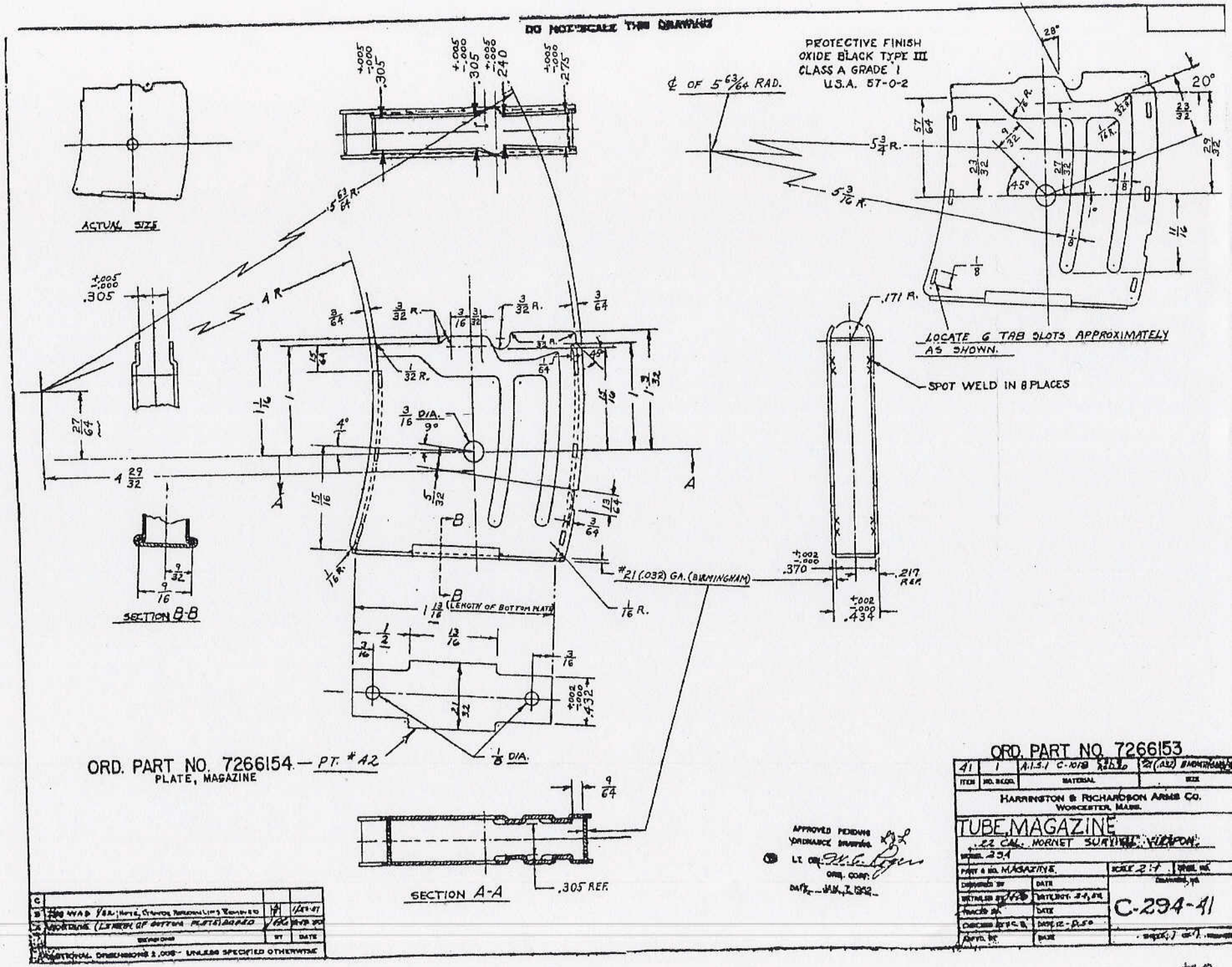
DO NOT SCALE THIS DRAWING
PROTECTIVE FINISH
OXIDE BLACK TYPE III
CLASS A GRADE 1
U.S.A. 57-0-2
℄ OF 5 63/64 RAD.
ACTUAL SIZE
LOCATE 6 TAB SLOTS APPROXIMATELY AS SHOWN.
SPOT WELD IN 8 PLACES
SECTION B-B
SECTION A-A
#21 (.032) GA. (BIRMINGHAM)
1 13/16 (LENGTH OF BOTTOM PLATE)
ORD. PART NO. 7266154 — PT. #42
PLATE, MAGAZINE
ORD. PART NO. 7266153
HARRINGTON & RICHARDSON ARMS CO.
WORCESTER, MASS.
TUBE, MAGAZINE
.22 CAL. HORNET SURVIVAL WEAPON
MODEL 294
PART & NO. MAGAZINE
SCALE 2:1
C-294-41
APPROVED PENDING ORDNANCE DRAWING
LT. COL. W. C. Rogers
ORD. CORP.
DATE JAN. 7, 1952
ADDITIONAL DIMENSIONS ±.005 - UNLESS SPECIFIED OTHERWISE

PIECE MARK	HEADSPACE LENGTH "L"	
7314929A	.062	
7314929D	.065	
7314929E	.069	

MARKING- R. S. CAL. .22 (H) M4 HEADSPACE

7314929, ORD. DEPT. U. S. A. INSP.

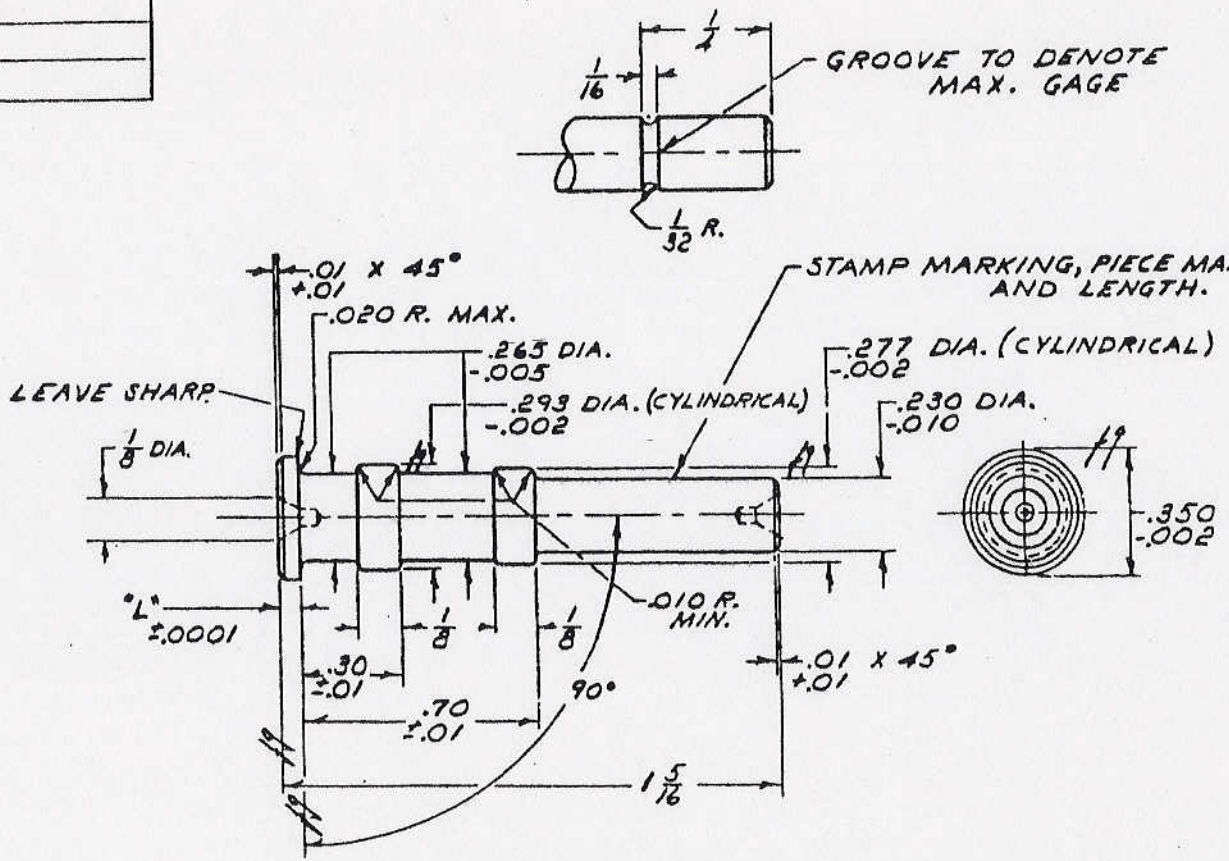

HEADSPACE · GAGE

ONE TOOL STEEL

FINISH & HARDEN *

SCALE 3 : 1

* HARDEN TO ROCKWELL SCALE "C" 63 MIN

LAP #9 SURFACES

REMOVE ALL SHARP EDGES

TOLERANCE OF ± ☆ ALLOWED ON ALL DIMENSIONS UNLESS OTHERWISE SPECIFIED

REVISIONS		
COMPONENT		GAGE
DRG. NO.	DATE	DATE
		7-19-50

DRG. PERTAINS TO

B 7314840 GAGE LISTS

D'FTSMAN	TRACER	L'D'G D'FTSMAN
D.E.		RAB
CHECKER	CHECKER	CHIEF D'FTSMAN
RAB		Amo.

SUBMITTED:-

PROD. ENG. ORD. DEPT. U. S. A.

APPROVED:-

CHIEF INSP. ORD. DEPT. U. S. A.

SPRINGFIELD ARMORY

DATE JUNE 22, 1950

B 7314929

MARKING:-
R. S. CAL. .22 (H) M4
BARREL 7265718
DEPTH OF CHAMBER
7314930A, ORD. DEPT. U. S. A. INSP.

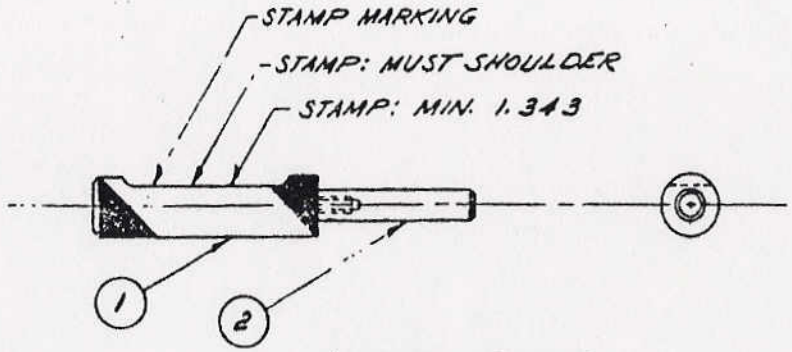

DEPTH GAGE
ASSEMBLY

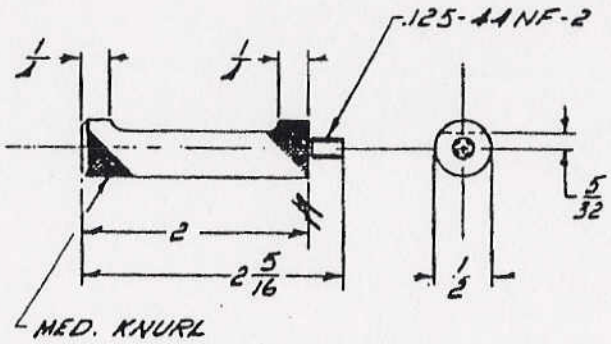

ONE TOOL STEEL
FINISH & HARDEN * (1)

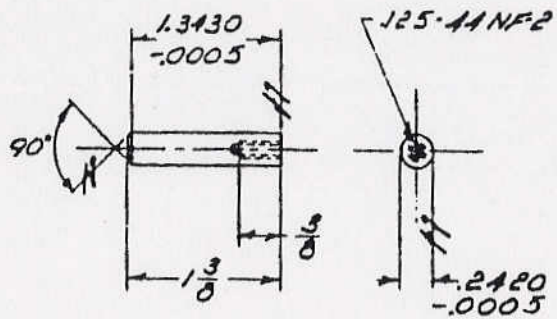

ONE TOOL STEEL
FINISH & HARDEN * (2)

TOLERANCE OF ± 1/64 ALLOWED ON ALL
DIMENSIONS UNLESS OTHERWISE SPECIFIED

* HARDEN TO ROCKWELL SCALE "C" 63 MIN.
LAP ALL SURFACES
REMOVE ALL SHARP EDGES

REVISIONS

COMPONENT		GA
DWG. NO.	DATE	DA
7265718		10-13

DRG. PERTAINS TO
B7314840-1 GAGE LI

DRAFTSMAN	TRACER	L'D'S DEPT
D.C.		RAG
CHECKER	CHECKER	CHIEF DEPT
RAB		

SUBMITTED:-

ORD. DEPT. U.

APPROVED:-
J. L. Duffman
CHIEF INSP. ORD. DEPT. U.

SPRINGFIELD ARMO

DATE OCT. 13, 195

B7314930