Inside the FN FAL

Fabrique Nationale's light automatic rifle, the right arm of the free world, has earned a reputation as one of the most successful assault rifle designs of the post-war years. The FAL is gas piston-operated and is chambered for the heavyweight 7.62-mm NATO cartridge. The result is an extremely robust, almost 'soldier proof' piece of kit.

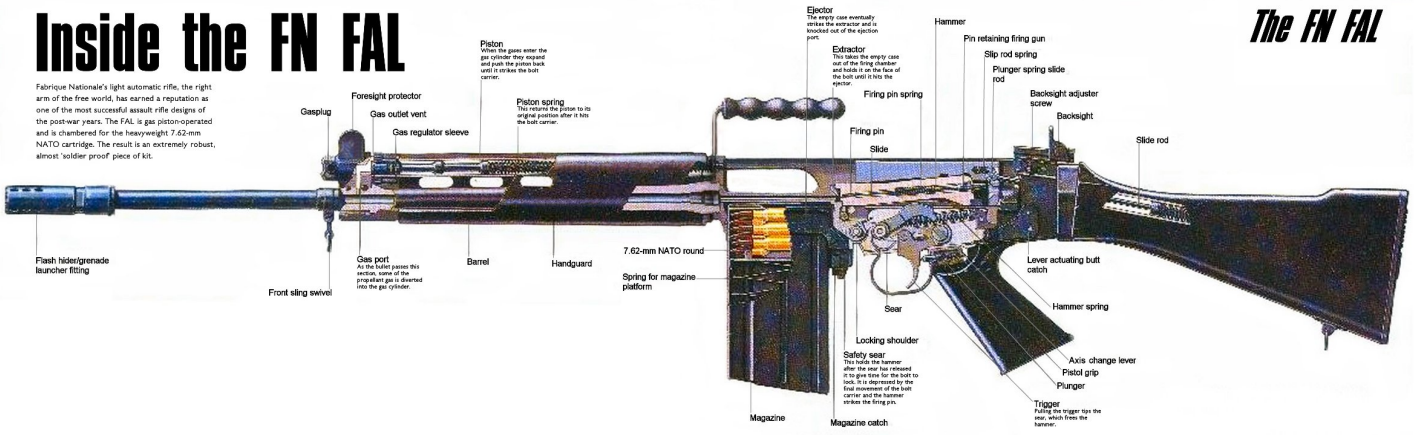

The FN FAL

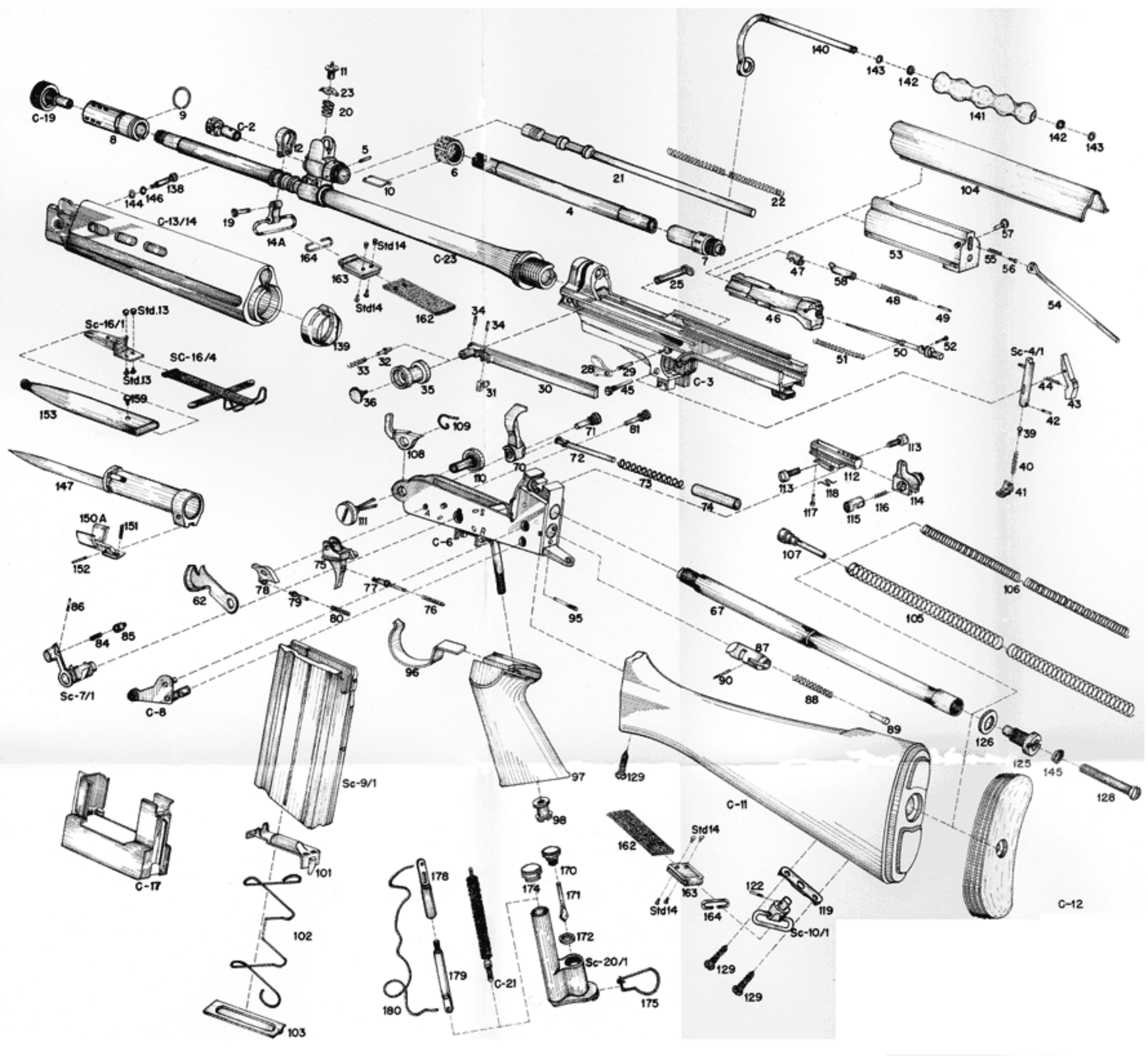
C-19
8
9
C-2
11
23
20
12
5
6
10
21
22
140
143
142
141
142
143
104
138
144
146
C-13/14
19
14A
164
Std14
163
Std14
162
C-23
4
7
25
53
57
55
56
54
47
58
48
49
46
51
50
52
Sc-16/1
Std.13
Std.13
SC-16/4
159
153
139
34
34
32
33
35
36
31
30
28
29
45
C-3
Sc-4/1
44
43
42
39
40
41
147
150A
151
152
108
109
110
111
70
71
81
72
73
74
113
112
113
118
117
115
116
114
C-6
107
106
105
62
78
75
79
77
76
80
95
67
86
84
85
Sc-7/1
C-8
96
87
90
88
89
126
125
145
128
Sc-9/1
97
129
C-11
98
162
Std14
163
Std14
164
122
119
Sc-10/1
C-12
C-17
101
102
103
178
179
180
C-21
174
170
171
172
Sc-20/1
175
129
129

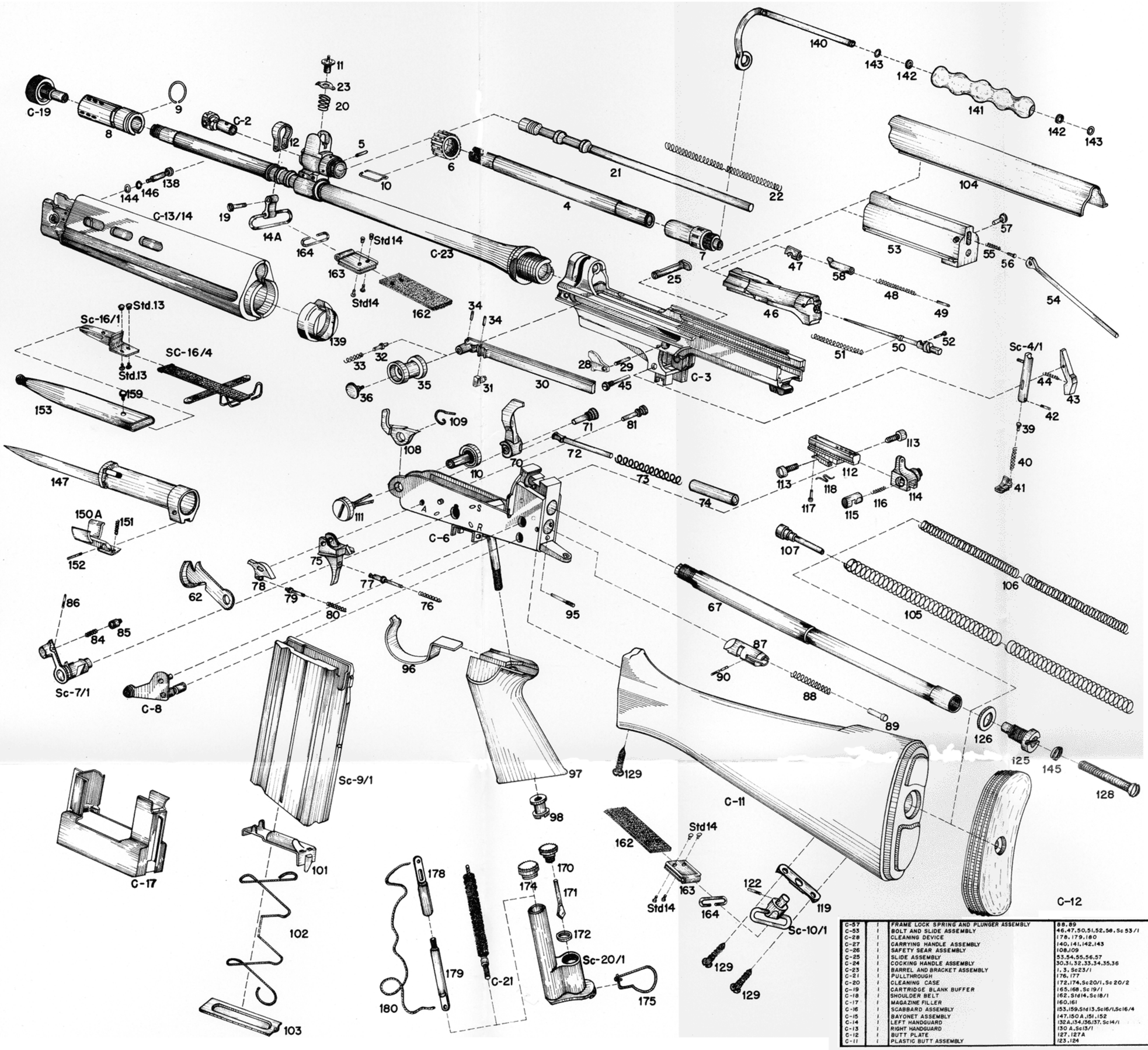

C-57	1	FRAME LOCK SPRING AND PLUNGER ASSEMBLY	88.89
C-53	1	BOLT AND SLIDE ASSEMBLY	46.47.50.51.52.58.Sc 53/1
C-28	1	CLEANING DEVICE	178.179.180
C-27	1	CARRYING HANDLE ASSEMBLY	140.141.142.143
C-26	1	SAFETY SEAR ASSEMBLY	108.109
C-25	1	SLIDE ASSEMBLY	53.54.55.56.57
C-24	1	COCKING HANDLE ASSEMBLY	30.31.32.33.34.35.36
C-23	1	BARREL AND BRACKET ASSEMBLY	1.3.Sc23/1
C-21	1	PULLTHROUGH	176.177
C-20	1	CLEANING CASE	172.174.Sc20/1.Sc 20/2
C-19	1	CARTRIDGE BLANK BUFFER	165.168.Sc19/1
C-18	1	SHOULDER BELT	162.Std14.Sc18/1
C-17	1	MAGAZINE FILLER	160.161
C-16	1	SCABBARD ASSEMBLY	153.159.Std13.Sc16/1.Sc16/4
C-15	1	BAYONET ASSEMBLY	147.150 A.151.152
C-14	1	LEFT HANDGUARD	132A.134.136.137.Sc14/1
C-13	1	RIGHT HANDGUARD	130 A.Sc13/1
C-12	1	BUTT PLATE	127.127A
C-11	1	PLASTIC BUTT ASSEMBLY	123.124

C-10	1	REAR SLING SWIVEL ASSEMBLY	119.122.Sc10/1
C-09	1	MAGAZINE ASSEMBLY	101.102.103.Sc 9/1
C-08	1	LOCK LEVER ASSEMBLY	91.92.93.94
C-07	1	CHANGE LEVER ASSEMBLY	84.85.86.Sc 7/1
C-06	1	FRAME ASSEMBLY	59.60.61.63.64.65.66.67.68.69
C-04	1	BOLT CATCH	41.42.Sc 4/1.Sc 4/2
C-03	1	RECEIVER ASSEMBLY	24.26.27.28.29
C-02	1	GAS PLUG ASSEMBLY	15.16.17.18
Sc-53/1	1	EXTRACTOR SPRING WITH BUFFER	48.49 " "
Sc-20/2	1	OIL-CAN CAP AND SPOON	170.171
Sc-20/1	1	CLEANING DEVICE BODY	169.173
Sc-16/4	1	SCABBARD SUPPORT	158.213.215.216.Std 12.Sd 16
Sc-16/1	1	SCABBARD COLLAR AND SPRING	154.154A.155.157
Sc-10/1	1	REAR SLING SWIVEL BODY	120.121
Sc-9/1	1	MAGAZINE BODY	99.100
Sc-7/1	1	CHANGE LEVER	82.83
Sc-4/2	1	BOLT CATCH SPRING PLUNGER AND SPRING	39.40
Sc-4/1	1	BOLT CATCH BODY WITH PIN	37.38
Std-14	4	BLACK RIVET	
Std-13	2	BLACK RIVET	
180	1	CLEANING DEVICE TWINE	
179	1	CLEANING DEVICE SCREW END	
178	1	PATCH HOLDER END	
175	1	HOLDING SPRING OF CLEANING DEVICE	
174	1	CLEACING-BRUSH CONTAINER CAP	
172	1	JOINT FOR OIL-CAN	
171	1	SPOON STEM	
170	1	OIL-CAN CAP	
164	2	SHOULDER BELT LOOP	
163	2	SHOULDER BELT END	
162	1	BELT	
159	1	SCABBARD KNOB	
153	1	SCABBARD BODY	
152	1	BAYONET CATCH PIN	
151	1	BAYONET CATCH SPRING	
150A	1	BAYONET CATCH	
147	1	BAYONET BLADE WITH TUBULAR HANDLE	
146	1	HANDGUARD SCREW SPRING WASHER	
145	1	BUTT PLATE SCREW WASHER	
144	1	HANDGUARD SCREW WASHER	
143	2	CARRYING HANDLE SPRING WASHER	
142	2	CARRYING HANDLE CONNECTING WASHER	
141	1	CARRYING HANDLE BODY	
140	1	CARRYING HANDLE STEM	
139	1	REAR ASSEMBLING CAP	
138	1	HANDGUARD SCREW	
129	3	REAR SLING SWIVEL BASE SCREW AND FRAME TANG SCREW	
128	1	BUTT PLATE SCREW	
126	1	BUTT SCREW WASHER	
125	1	BUTT SCREW	
122	1	REAR SLING SWIVEL PIN	
119	1	REAR SLING SWIVEL BASE	
118	1	REAR SIGHT ADJUSTING SCREW STOP SPRING	
117	1	REAR SIGHT SLIDE STOP PIN	
116	1	SIGHT SLIDE LOCK SPRING	
115	1	SIGHT SLIDE LOCK	
114	1	SIGHT SLIDE	
113	2	REAR SIGHT ADJUSTING SCREW	
112	1	REAR SIGHT BASE	
111	1	FRAME-RECEIVER JOINT PIN RETAINER	
110	1	FRAME-RECEIVER JOINT PIN	
109	1	SAFETY SEAR SPRING	
108	1	SAFETY SEAR	
107	1	RETURN SPRINGS PLUNGER	
106	1	INNER RETURN SPRING	
105	1	OUTER RETURN SPRING	
104	1	COVER	
103	1	MAGAZINE BOTTON PLATE	
102	1	MAGAZINE PLATFORM SPRING	
101	1	MAGAZINE PLATFORM	
98	1	PISTOL GRIP FASTENING SCREW	
97	1	PISTOL GRIP	
96	1	TRIGGER GUARD	
95	1	LOCK LEVER FASTENING SCREW	
90	1	FRAME LOCK GUIDE-PIN	
89	1	FRAME LOCK PLUNGER	
88	1	FRAME LOCK SPRING	
87	1	FRAME LOCK	
86	1	CHANGE LEVER PIN	
85	1	CHANGE LEVER PLUNGER	
84	1	CHANGE LEVER PLUNGER SPRING	
81	1	SEAR AND TRIGGER PIN	
80	1	SEAR SPRING	
79	1	SEAR SPRING PLUNGER	
78	1	SEAR	
77	1	TRIGGER SPRING PLUNGER	
76	1	TRIGGER SPRING	
75	1	TRIGGER	
74	1	HAMMER SPRING PLUNGER	
73	1	HAMMER SPRING	
72	1	HAMMER SPRING ROD	
71	1	HAMMER PIN	
70	1	HAMMER	
67	1	RETURN SPRING TUBE	
62	1	LOCKING PLATE	
58	1	EXTRACTOR PLUNGER	
57	1	SLIDE ROD PIN	
56	1	SLIDE ROD SPRING PLUNGER	
55	1	SLIDE ROD SPRING	
54	1	SLIDE ROD	
53	1	SLIDE	
52	1	FIRING PIN RETAINING PIN	
51	1	FIRING PIN SPRING	
50	1	FIRING PIN	
49	1	EXTRACTOR SPRING BUFFER	
48	1	EXTRACTOR SPRING	
47	1	EXTRACTOR	
46	1	BOLT	
45	1	MAGAZINE CATCH PIVOT SCREW	
44	1	MAGAZINE CATCH SPRING	
43	1	MAGAZINE CATCH	
42	1	BOLT CATCH KNOB RIVET	
41	1	BOLT CATCH KNOB	
40	1	BOLT CATCH SPRING	
39	1	BOLT CATCH SPRING PLUNGER	
36	1	COCKING HANDLE RIVET	
35	1	COCKING HANDLE KNOB	
34	2	STUD STOP PIN OR PLUNGER RETAINING PIN	
33	1	COCKING HANDLE PLUNGER SPRING	
32	1	COCKING HANDLE PLUNGER	
31	1	SLIDE COCKING STUD	
30	1	SLIDE COCKING HANDLE	
29	1	EJECTOR RETAINING PIN	
28	1	EJECTOR	
25	1	LOCKING SHOULDER	
23	1	FRONT SIGHT FIXING PLATE	
22	1	PISTON SPRING	
21	1	PISTON	
20	1	FRONT SIGHT SPRING	
19	1	FRONT SLING SWIVEL SCREW	
14A	1	FRONT SLING SWIVEL	
12	1	FRONT SLING SWIVEL BRACKET	
11	1	FRONT SIGHT	
10	1	GAS REGULATOR SLEEVE SPRING	
9	1	GRENADE RETAINING SPRING	
8	1	FLASH-HIDER	
7	1	GAS CYLINDER AND CARRYING HANDLE FASTENING NUT	
6	1	GAS REGULATOR SLEEVE	
5	1	CYLINDER RETAINING PIN	
4	1	GAS CYLINDER	

Nº	QUANT	DESIGNATTION	COMPONENTS
MODIFICATION			

SCALE: —	LIGHT AUTOMATIC RIFLE IMBEL 7,62 mm	Nº AI-7357-500	
	PIECES AND ASSEMBLIES (COMMERCIAL)	DEFINITIVE USE:	
		SUBSTITUTED:	
		SUBSTITUTED BY:	
APPROVED	Carlos Lourenço	16/11/83	INDÚSTRIA DE MATERIAL BÉLICO DO BRASIL
CONFERED	Francisco	13/11/83	IMBEL
PROJECTED			
DESIGNED	Gaspar	11-11-83	FÁBRICA DE ITAJUBÁ - F5