U.S. Army
Environmental
Center

BULLET TRAP FEASIBILITY ASSESSMENT

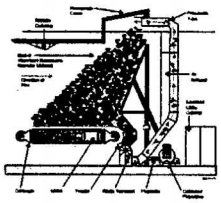

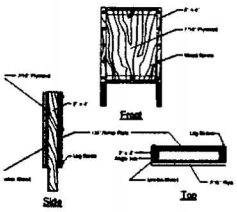

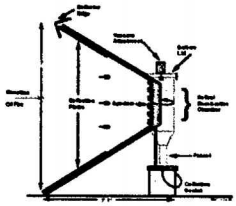

Report No. SFIM-AEC-ET-CR96195

DISTRIBUTION STATEMENT A
Approved for public release;
Distribution Unlimited

Sponsored by:
The Army Environmental Center &
The Army Training Support Center

Prepared for:
Defense Evaluation Support Activity
2251 Wyoming Blvd. S.E.
Contract No. DW398AW95

Prepared by:
TRW - Systems Integration Group
One Federal Systems Park Drive
Fairfax, Virginia 22033

19970605 117

Table of Contents

Section	Page
Purpose	1
Background	1
Methodology	2
How to Read this Report	4
Bullet Traps at a Glance	7
Trap Profiles	8
Friction	8
Deceleration	19
Impact	22
Trap Analysis	27
25 Meter Range	28
Automated Field Fire Range	29
Automated Record Fire Range	30
Combat Pistol Qualification Course	31
Some General Issues which are Independent of Trap Type	32
Pointers for Potential Buyers	39
Conclusions	41
Applicable Bullet Traps	41
Recommendations	42
Appendix A - References	45
Appendix B - Manufacturer Addresses and Phone Numbers	45

On the cover

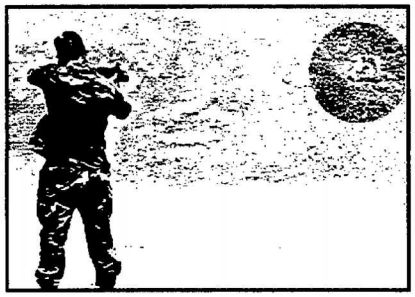

Soldier firing on an experimental SACON block. (Photograph provided by the U.S. Army Corps of Engineers Waterways Experiment Station)

Disclaimer:
This Report represents our best effort to identify and assess bullet traps as of the date of this report. The views, opinions, and/or findings contained in this report should not be construed as an official Department of the Army position, policy or decision, unless so designated by other documentation. This report may not be cited for purposes of advertisement.

Section	Page

List of Tables

Table 1- Minimum Acceptable Levels for Evaluation Criteria.....33
Table 2 - Bullet Trap Evaluation by Individual Criteria.....34
Table 3 - Bullet Trap Evaluation Which Distinguish the Four Range Types.....35

List of Figures

Figure 1 - 25 Meter Range.....5
Figure 2 - Automated Field Fire Range.....5
Figure 3 - Automated Record Fire Range.....6
Figure 4 - Combat Pistol Qualification Course.....6
Burleburger Schaumstoffwerk - REGUPOL.....8
Capito & Assenmacher - Granular Trap.....9
Caswell - Gran Trap.....10
Caswell - Lamella.....11
COTS - Logs or Railroad Ties.....12
COTS - Rubber Blocks.....13
COTS - Tires.....14
COTS - Wax/Plastic Blocks.....15
Range Masters - TEC.....16
Waterways Experiment Station - SACON.....17
Societa FRA.SA - Elasomeric Granular Screen.....18
Action Target - Total Containment Trap (TCT).....19
Savage Range Systems - Passive Bullet Trap OM96.....20
Shooting Ranges International - R493.....21
Action Target Thunder Ranch.....22
COTS - Escalator Trap.....23
COTS - Sand Trap.....24
COTS - Steel Louvers with Sand Bed.....25
COTS - Water Trap.....26

Purpose

This report allows the range manager interested in choosing a bullet trap to narrow the field of traps to those traps which are applicable to his individual needs. The analysis presented here assesses the feasibility of using commercially available bullet traps on four types of small arms ranges: 25 meter, Automated Field Fire, Automated Record Fire, and Combat Pistol Qualification Course. This report also describes the potential benefits of bullet traps, highlighting the environmental considerations associated with the application of bullet traps on military small arms ranges.

Background

Over 2000 small arms ranges exist at Department of Defense sites. The services use these firing ranges for training and maintaining military readiness. Individual firing ranges expend millions of rounds annually. Lead, Copper, Zinc, and Antimony may build up in range soils related to the use of the range. Berm surfaces may contain as much as 1-3% lead by weight (Heath et al., 1991). Depending on the site specific environmental characteristics at a range (soil type, vegetation, rainfall, proximity to streams, etc.), this lead may migrate from the range to adjacent water resources.

In addition to the potential for metals transport at small arms ranges, repeated bullet impact around and near target areas creates beaten zones where bullets splatter soil material. These incised beaten zones lack vegetation. These open incised beaten zones not only gives away the target location, but also promote soil erosion. These conditions increase the need for land rehabilitation. Discussions with range managers indicate that occasionally, these beaten zones may also build up enough metal to create a ricochet hazard, presenting a safety problem.

The Army Environmental Center (AEC) in partnership with the Army Training Support Center (ATSC) sponsored this Bullet Trap Feasibility Assessment (executed by TRW) as part of a larger effort to promote safety and prevent pollution on Army ranges. The larger effort consists of a suite of tools for use at the installation level to evaluate and mitigate environmental risk. First, a software tool, called Range Evaluation Software Tool (REST) uses site specific information to evaluate the potential for metals migration to surface and ground water resources. It provides a four color ranking for any range based on the user specified range environmental characteristics. Second, should the evaluation indicate a moderate to high potential for metals migration (red indicates highest potential and amber indicates moderate potential), the AEC has developed two environmentally sound mitigation

alternatives. One option, an environmental design for small arms ranges, includes berm construction techniques and a detention pond to trap rainstorm derived runoff particles which may contain metals. Alternatively, an installation may choose to install bullet traps. This report addresses the applications where bullet traps can provide functional (catch bullets) and operational (consistent with range activities) alternatives to direct environmental release.

Methodology

The research team identified commercially available bullet traps (as of June, 1996); visited manufacturers and installations where bullet traps were in use; developed evaluation criteria based on installation range personnel needs; and compared the various bullet traps for different range applications based on the evaluation criteria.

The team used the following research methods for identifying bullet trap types and manufacturers for this report:

Performed an international literature search utilizing electronic databases: TRW's Electronic Collateral Support System, Data Times, Knight-Ridder, Defense Technical Information Center, Computer Select, National Technical Information Service, Thomas Register, Dun's Identifier, Trade and Industry Index, Dialog (key words: bullet trap, small arms range, firing range, shooting range, firing range, training range, rifle range, berm, outdoor range, small arms and environmental cleanup, stopping bullets, lead trap);

Visited the National Rifle Association Range Technical Team Operations Group;

Conducted telephone interviews with 1) the military attaches at US embassies in the United Kingdom, Italy, France, Germany, Switzerland, Sweden, Canada, and Israel; 2) the Marine Corps; 3) the FBI; and 4) local law enforcement agencies.

After identifying all the known trap types (as of June, 1996), the research team visited installations and manufacturers for some of the traps to see the individual bullet traps and speak with range managers regarding bullet trap performance. The research team visited four manufacturers to discuss which of their bullet traps might be applicable to outdoor small arms ranges: 1) Caswell International, in Minneapolis, Minnesota; 2) Range Masters, Inc., in Le Center, Minnesota; 3) Action Target, in Provo, Utah; and 4) Shooting Ranges International, in Las Vegas, Nevada.

The team visited Fort Drum, New York, which uses a venetian blind type friction trap on a 25 meter range; Quantico Marine Corps Base, Virginia, which was testing one granular rubber friction trap at a single firing point on a 25 meter range; Fort Knox, Kentucky, which uses mounds of wooden logs on a Field Fire range; Thunder Ranch, New Mexico, (commercial firearms training school) which has many portable wooden/elastic steel-backed boxes used in an indoor shooting house and several outdoor ranges; and Tinker AFB which has a fixed distance range with steel deceleration traps.

The research team also visited ranges without traps and met with range managers to discuss user needs, develop evaluation criteria for bullet traps (AEC report number SFIM-AEC-ET-CR-96142) and select the range types against which these traps would be evaluated. The following eight additional installations were visited: Fort Benning (Georgia), Fort Eustis (Virginia), Fort Hood (Texas), Fort Jackson (S. Carolina), Fort Leonard Wood (Missouri), Fort Pickett (Virginia), Fort Rucker (Alabama), and Fort Sill (Oklahoma). These installations span the spectrum from high to low intensity range use.

In order to capture the variety of small arms ranges used by the Army, the research team, in coordination with ATSC, selected four range types to evaluate based on range use (e.g. known distance versus pop-up target ranges), types of weapons used on these ranges, and variety of range layouts (distances between targets). Figures 1 through 4 illustrate the layout of the four range types (25 meter, Automated Field Fire-AFF, Automated Record Fire-ARF, and Combat Pistol Qualification Course-CPQC) and the associated figure captions describe theses ranges for those unfamiliar with the variety of ranges used by the Army.

This report then uses the established evaluation criteria and their minimum acceptable values to assess which traps meet the criteria, and therefore, which traps could be applied to the four range types.

CAUTION

Caution: As of the date of this report, the data on bullet trap cost and performance remain limited due to the small number of outdoor applications, lack of test data (side by side comparison), and absence of vendor cost data. Therefore, the analysis presented here uses relative measures of cost and performance. For example, the symbol $$$$ indicates highest relative cost and the symbol $ indicates lowest relative cost. Relative measures of cost are based, in part, on data from outdoor traps at Tinker AFB and Fort Drum. Additionally, maintenance figures used in this analysis represent vendor claims and not independently evaluated numbers. Potential capture rates used in this analysis are the estimates of range installation personnel and not measured target hits for individual targets.

The Army Environmental Center plans an independent evaluation of bullet traps (several types) across the four range types analyzed here. For additional details you may contact the Army Environmental Center on their electronic mail (t2hotline@aec.apgea.army.mil), on their telephone hotline (1-800-USA-3845), or look for information on their Web Site (http://aec.www.apgea.army.mil:8080/).

How to read this Report

This report starts with "Bullet Traps at a Glance" which lays out the whole spectrum of available bullet traps, including manufacturers. "Bullet Traps at a Glance" gives you the playing field quickly and categorizes the bullet traps into three classes based on how the trap physically stops the bullet. The "Trap Profiles" lists commercially available bullet traps by type alphabetically, providing you with the trap's major attributes and a sketch of the trap. You may glance through these profiles to get a feel for the variety of bullet traps available, but don't try to read them all just yet. Use these profiles only after reading the "Trap Analysis" section, which presents an analysis of which trap types best apply to the four range types.

In the "Trap Analysis" section, you can quickly see what types of traps might apply to your range (last column in Table 2). Then use the "Trap Profiles" in combination with Table 2 and 3 to select one or more trap types which will work at specific distances or targets. Then apply the evaluation criteria listed in these tables weighted according to your individual needs. The "Trap Analysis" section also provides a discussion of "Some General Issues Which are Independent of Trap or Range Type." After you have chosen several traps for your range you may consider calling vendors to inquire about actual costs and scheduling requirements. For this, you may look over the "Pointers for Potential Buyers."

As a quick reference, the "Conclusions" section summarizes the feasible bullet traps for various distances at the four range types evaluated here. This section also describes additional data needs which will strengthen the analysis presented here.

Appendices cover "References" (Appendix A) and "Manufacturer Addresses and Phone Numbers" (Appendix B).

Figure 1. 25 Meter Range

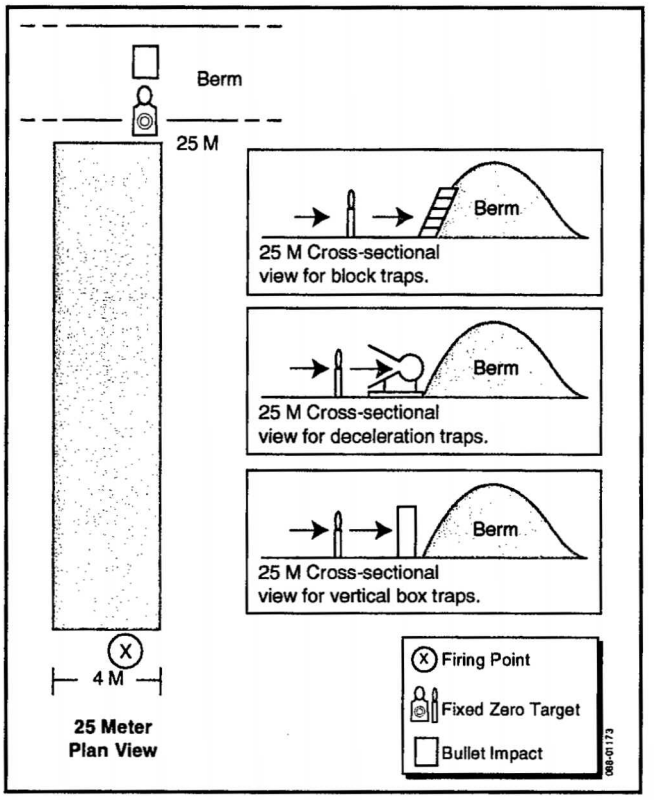

This figure shows one firing lane on a 25 Meter Range (plan view) and three cross sectional views showing possible bullet trap configurations. The 25m range generally consists of 110 firing lanes, each 4 meters wide. This range experiences approximately 9 - 24 rounds per firer. The firer shoots at a single, fixed and known distance target. Neither masking nor camouflaging affects the choice of bullet trap.

Figure 2. Automated Field Fire Range

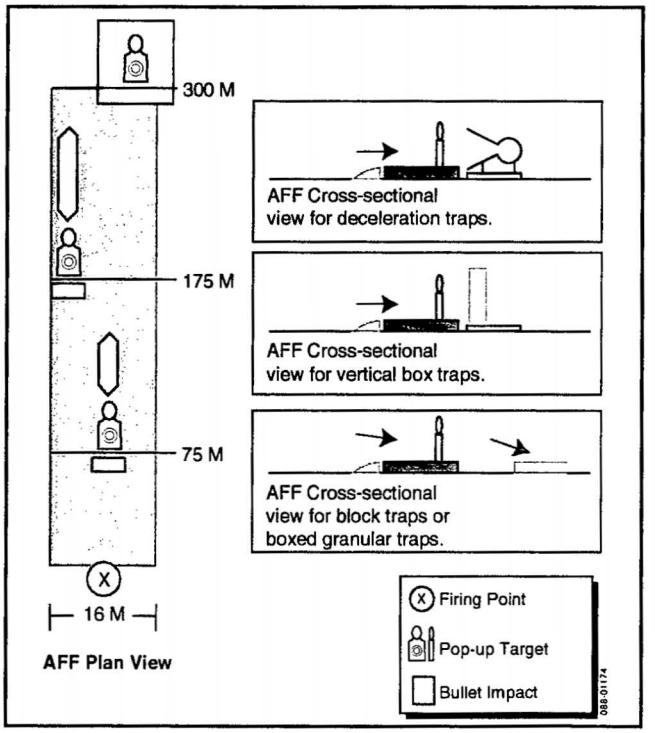

This figure shows one firing lane on a Automated Field Fire Range (plan view) and three cross sectional views showing possible bullet trap configurations. The Automated Field Fire Range has 32 firing lanes, each 16 meters wide, with known pop-up targets at 75, 175, and 300 meters. The soldier generally fires 40 rounds: 10 at the 75 meter target, 20 at the 175 meter target, and 10 at the 300 meter target. The target locations are spaced far enough apart down-range that neither masking or camouflaging affects the choice of bullet traps.

Figure 3. Automated Record Fire Range

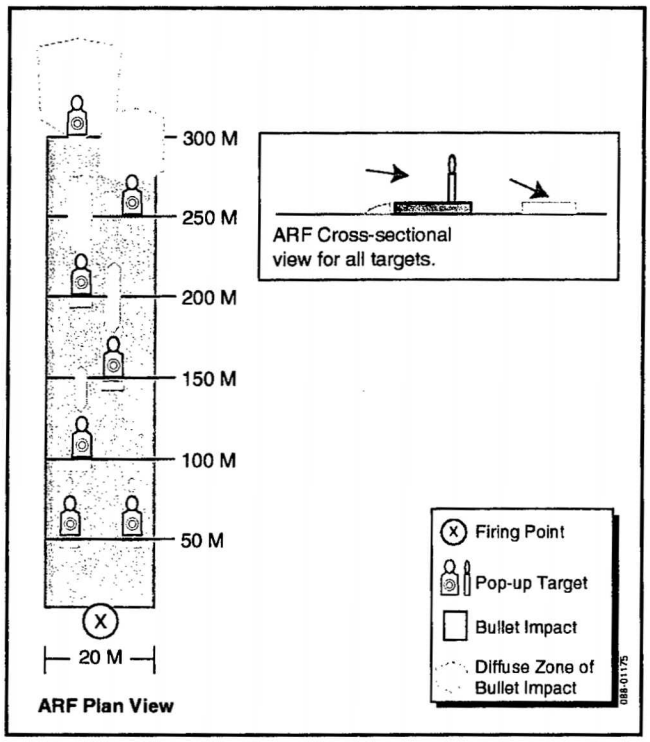

This figure shows one firing lane on a Automated Record Fire Range (plane view) and a cross sectional view of one target showing either granular box trap or block trap nearly flush with the ground. This range generally has 16 firing lanes with 7 pop-up targets per lanes at distances of 50, 100, 150, 200, 250, and 300 meters. The soldier generally fires 40 rounds. Given that target locations must remain unknown on this range and the close proximity of the targets, both masking and camouflage will be major factors affecting the choice of bullet traps.

Figure 4. Combat Pistol Qualification Course

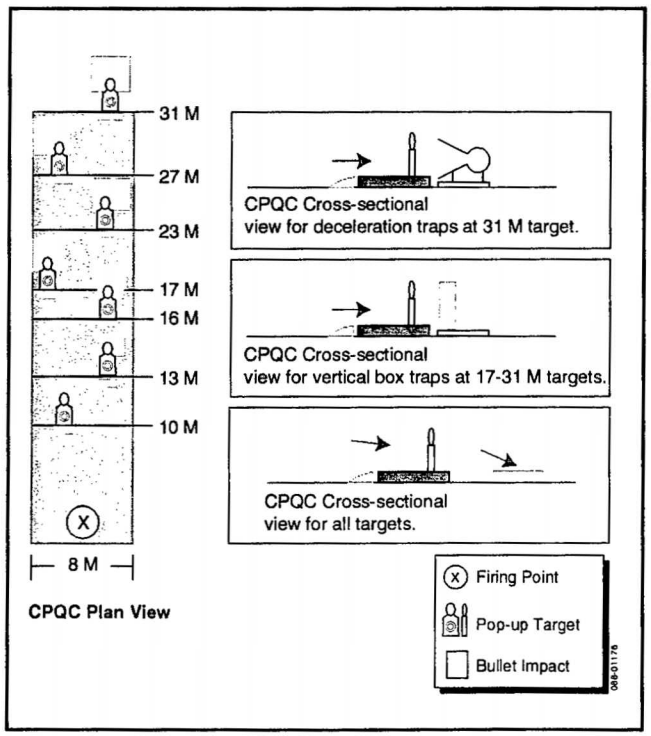

This figure shows one firing lane on a Combat Pistol Qualification Course (plan view) and three cross sectional views showing possible bullet trap configurations for various targets. The Combat Pistol Qualification Course has 15 lanes, each 8 meters wide, with 7 pop-up targets at 10, 13, 16, 17, 23, 27, and 31 meters. Although the locations are known, target masking will affect the choice of bullet traps for most targets on this range. This range only handles handgun ammunition up to .45 caliber.

Bullet Traps at a Glance

Three different methods of stopping bullets distinguish three different categories of bullet traps:

1) friction,
2) deceleration, and
3) impact.

Traps were categorized by stopping mechanism because this also groups them by how they mechanically work, and therefore these groups tend to have the same general layout. In the case of frictional traps, bullets enter a medium (such as wood, rubber, soil, plastic, or Shock Absorbing Concrete (SACON)) which slows and eventually stops the bullet. Deceleration traps employ angled steel plates which deflect bullets into a helical chamber where the bullets spin until they lose velocity and drop into a collection chamber. Impact traps stop the bullets at their initial contact with the trap material, which is either angled steel plates with lower collection area or a steel-backed wooden box.

The following list constitutes all traps identified to date, including those currently available from manufacturers and those which could be constructed from Commercial Off-The-Shelf (COTS) materials. Model type and/or number follows the manufacturer's name. For manufacturer addresses and phone numbers, see Appendix B.

FRICTION
Burleburger Schaumstoffwerk - REGUPOL
Capito & Assenmacher - Granular Trap
Caswell - Gran Trap
Caswell - Lamella
COTS - Logs or Railroad Ties
COTS - Rubber Blocks
COTS - Tires
COTS - Wax/Plastic Blocks
Range Masters - TEC
Waterways Experiment Station - SACON
Societa FRA.SA - Elasomeric Granular Screen
DECELERATION
Action Target - TCT
Savage Range Systems - Passive Bullet Trap OP96
Shooting Ranges International - R493
IMPACT
Action Target - Thunder Ranch
COTS - Escalator
COTS - Sand Trap
COTS - Steel Louver
COTS - Water Trap

Trap Profiles

These profiles describe current and historical traps by type and give you drawings so you can see what the traps look like.

Friction

Burleburger Schaumstoffwerk - REGUPOL

General Description: REGUPOL elastic material comes as pre-formed sheets or blocks of recycled polyurethane/rubber granules. A flexible material, REGUPOL can be used in a variety of thicknesses and configurations to absorb bullets, and cover overhead baffles or range floors to prevent ricochets. The manufacturer claims REGUPOL is heat and weather resistant and is suitable for outdoor range applications. Blocks of REGUPOL used in bullet traps are 500mm x 500mm x 200mm thick and stacked two blocks deep. The REGUPOL sheet material (1250 mm wide by 10 to 20 mm thick) lies up against the block front to retain bullet fragments.

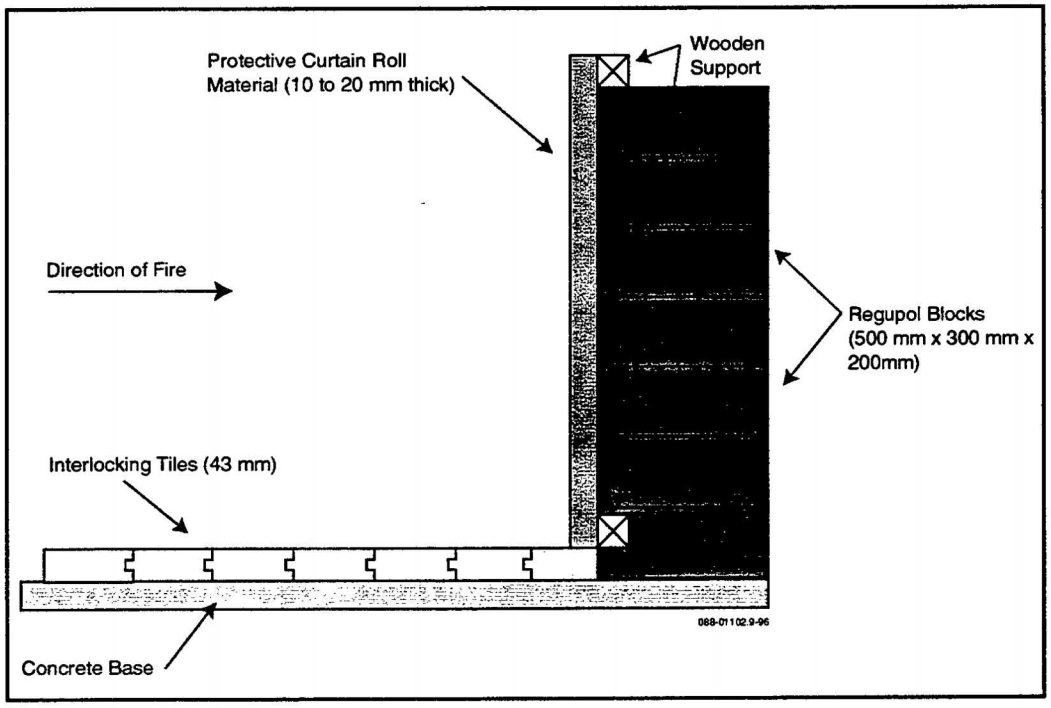

Ammunition: Handgun.

Capacity: Manufacturer claims 10,000 rounds.

Capito & Assenmacher - Granular Trap

General Description: The components of this box shaped granular friction trap are from back to front as follows: armor plate back, plywood sides, granular rubber fill, 2 inches of polyurethane sheets retaining the fill, an air gap, and a rubber conveyor belt front. An access door at the back allows removal of the granular fill material and bullets by means of a truck-mounted vacuum system. This removed material undergoes bullet separation and up to 80 percent of the granular material is recycled back into the trap. Recovered bullets are generally intact. Upon firing, the bullet penetrates the front curtain and polyurethane sheet and is halted, generally within the first 12 inches, by the granulated material. In tests conducted so far, tracer rounds have had no noticeable effect. The trap requires a level concrete pad.

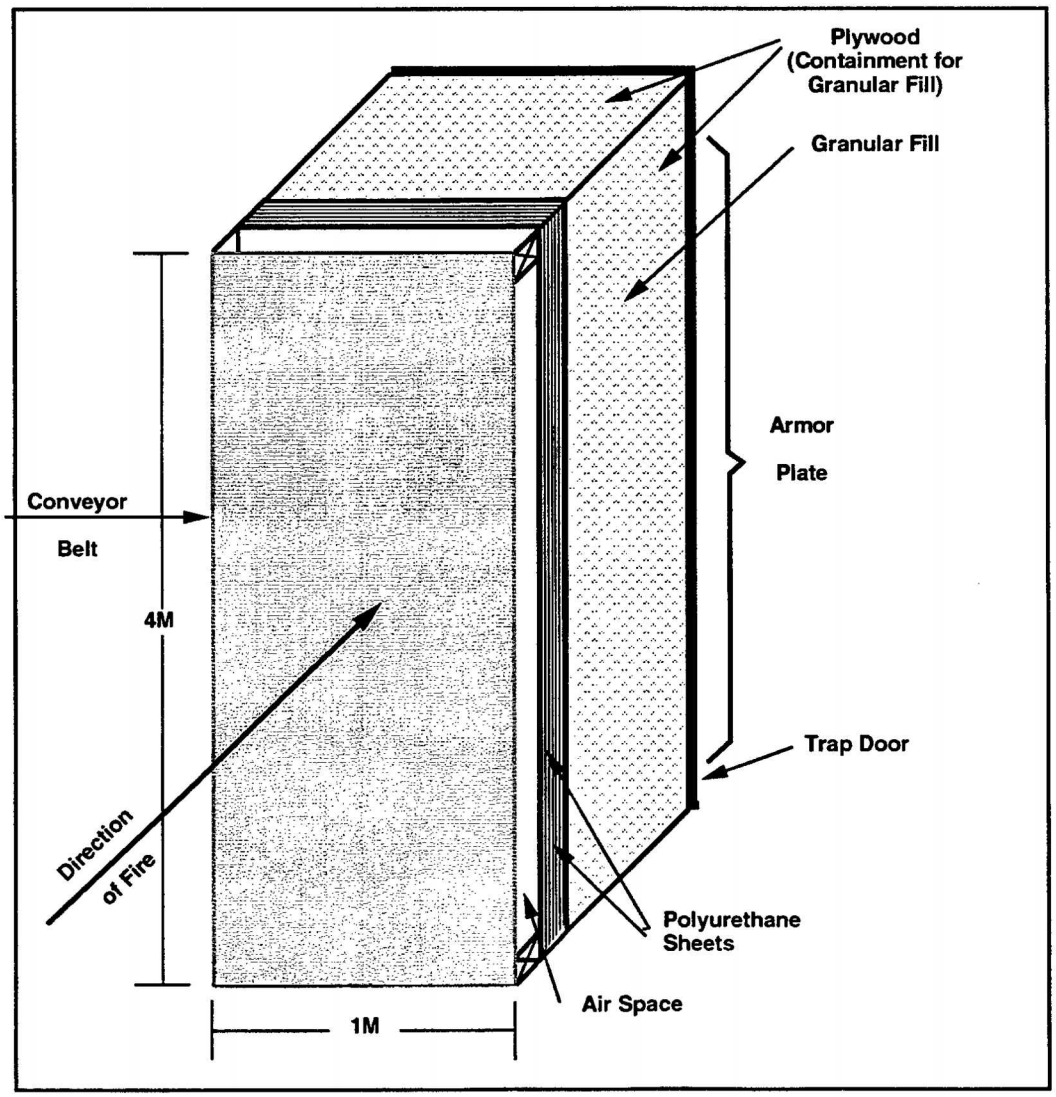

Ammunition: up to .50 cal.

Capacity: Manufacturer claims 25,000 rounds.

Caswell - Gran Trap

General Description: The Gran Trap is a large vertical box comprised of a steel frame with a steel back plate and plywood sides. A large rubber conveyor belt sheet bolts onto the plywood sides, forming the trap front. Granulated, recycled tire material (GranTex) fills the interior of the trap. The bullet penetrates the front sheet and is halted, generally within the first 12 inches, by the granulated material. Conveyor belt patches bolt onto the front panel to stop GranTex leakage, which result from focused areas of bullet impact.

Caswell recommends using a two stage vacuum/blower to separate the GranTex from the bullets in the collection trough at the front of the trap, and then recycling the GranTex material back into the top of the trap. Bullets recovered during this GranTex recycling are generally intact.

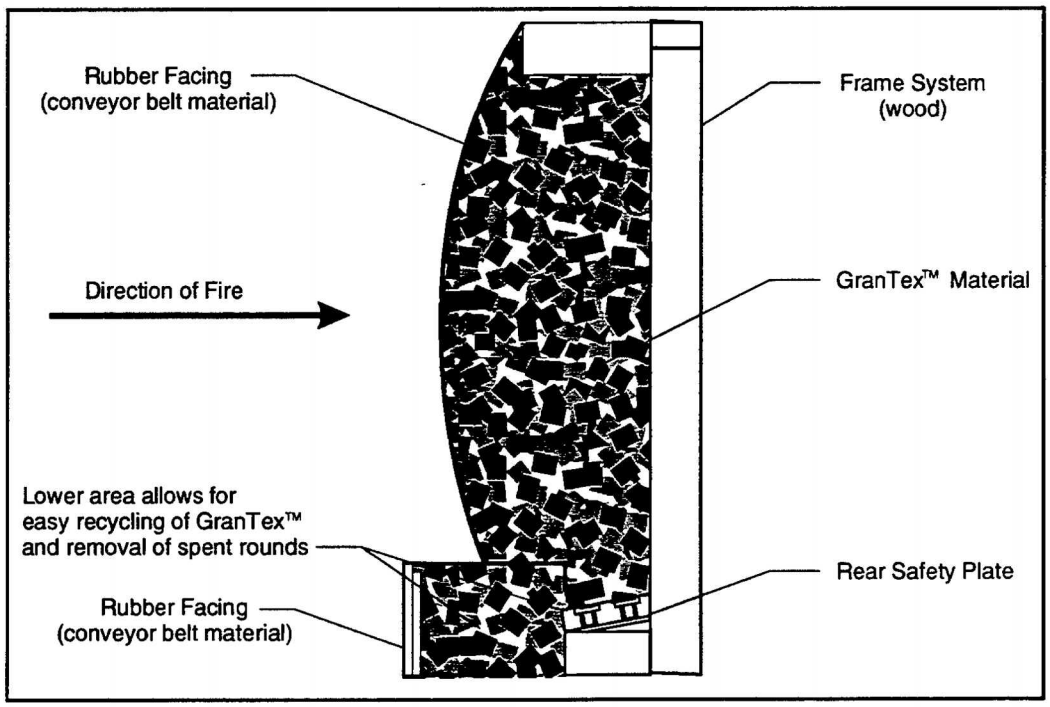

Ammunition: Up to .50 cal.

Capacity: Manufacturer claims 50,000 rounds.

Caswell - Lamella

General Description: The Lamella trap consists of a series of strips of recycled industrial conveyor belts, about 10 feet long, hung in a herringbone pattern (the front set looks like a partly closed venetian blind facing the firer). A shorter set of replaceable strips is attached to the front of this large trap to reduce the wear on the main trap. Bullets penetrate successive layers of the strips until they shed velocity and fall to the bottom of the trap. The bullets sometimes imbed themselves in the strips or, more often, become fragmented. As the individual lamella strips wear, they can be quickly rotated to other locations within the trap that receive less fire. The strips from those locations are moved to the high volume areas.

Ammunition: The trap has only been tested successfully against 7.62 mm, but the manufacturer claims it handles up to .50 caliber.

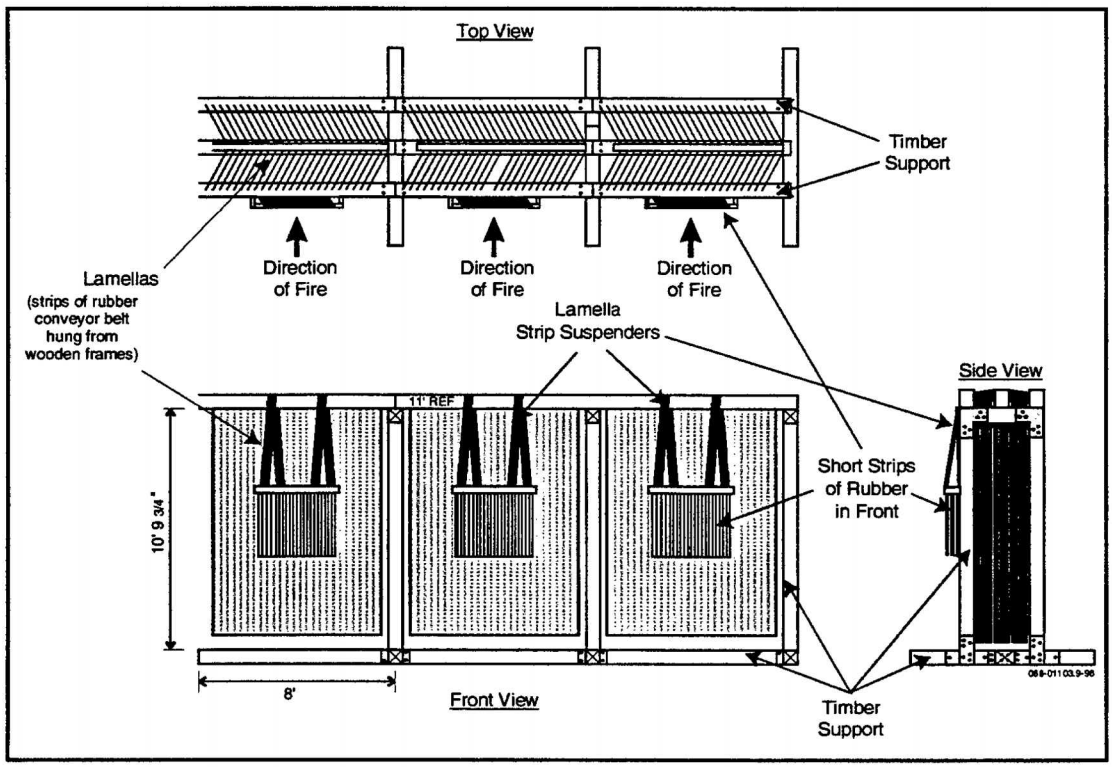

Capacity: Manufacturer claims 50,000 round before replacement of the lamella strips.

COTS - Logs or Railroad Ties

General Description: This simple outdoor trap uses railroad ties or logs stacked perpendicular to the axis of firing. Range personnel can stack the ties as deep or high as required. Rounds penetrate the wood and stop at various distances depending on the ammunition used. Rounds embedded in the wood are difficult to recover and the wood may require disposal. Various ranges use this method to protect the front of cement target coffins.

Ammunition: Up to 7.62 mm.

Capacity: Approximately 10,000 rounds.

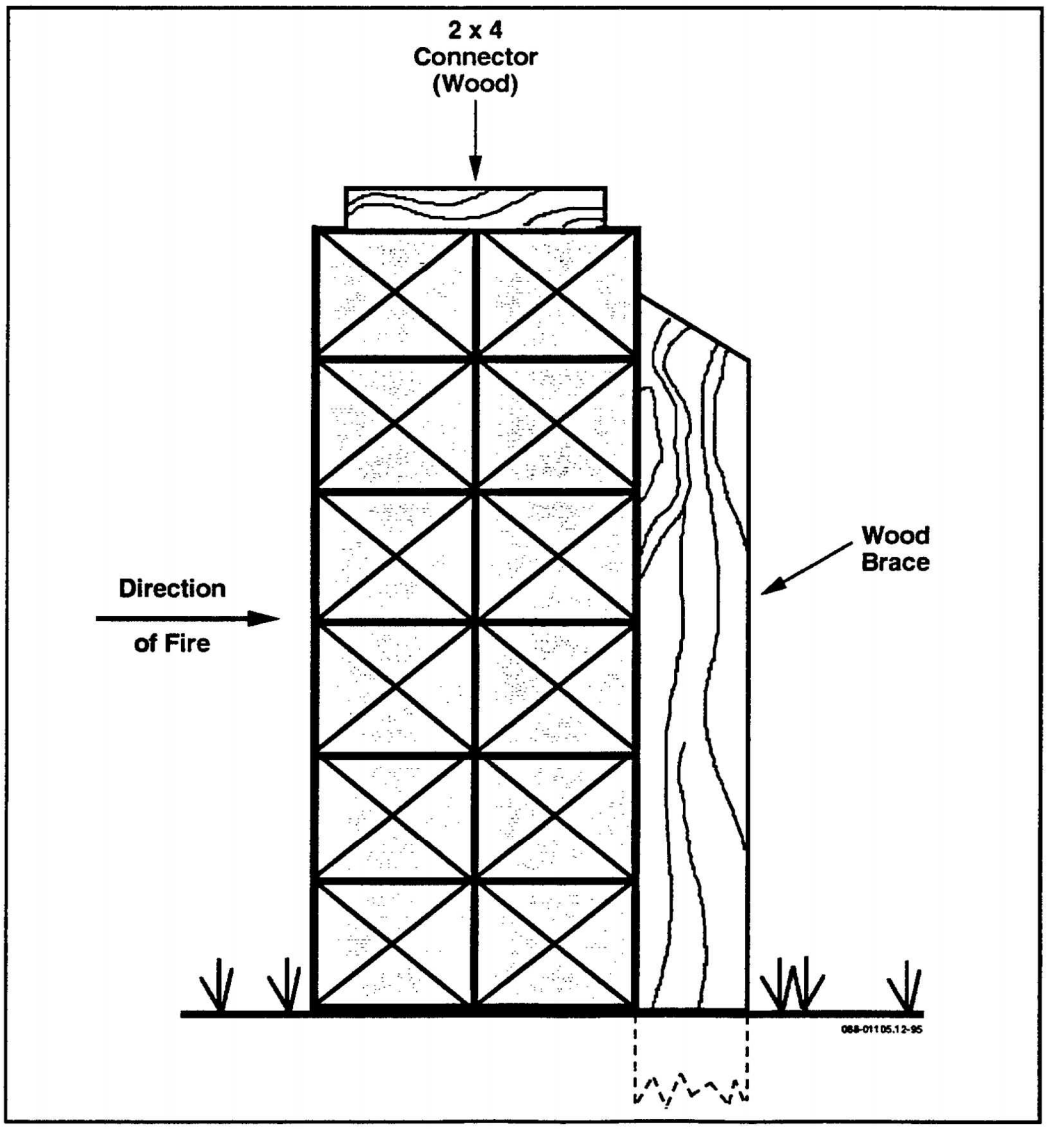

COTS - Rubber Blocks

General Description: Blocks of various rubber compounds or recycled rubber material are stacked to form a barrier. These blocks line indoor shooting houses and form a protective barrier around items such as fuel pipes adjacent to outdoor ranges. Blocks come in various sizes, but are generally around 60 to 80 pounds and measure 30 x 12 x 12. Bullets penetrate the block and the friction of the rubber against the bullet surface causes the bullet to stop in a short distance, usually less than 2 feet. Blocks have the advantage of being modular, so that only the worn or filled blocks require replacement, reducing the labor and cost associated with maintenance. On the other hand, rubber may produce a fire hazard and many of these blocks require disposal as hazardous waste.

Ammunition:
Up to 7.62 mm.

Capacity:
Approximately 10,000 rounds.

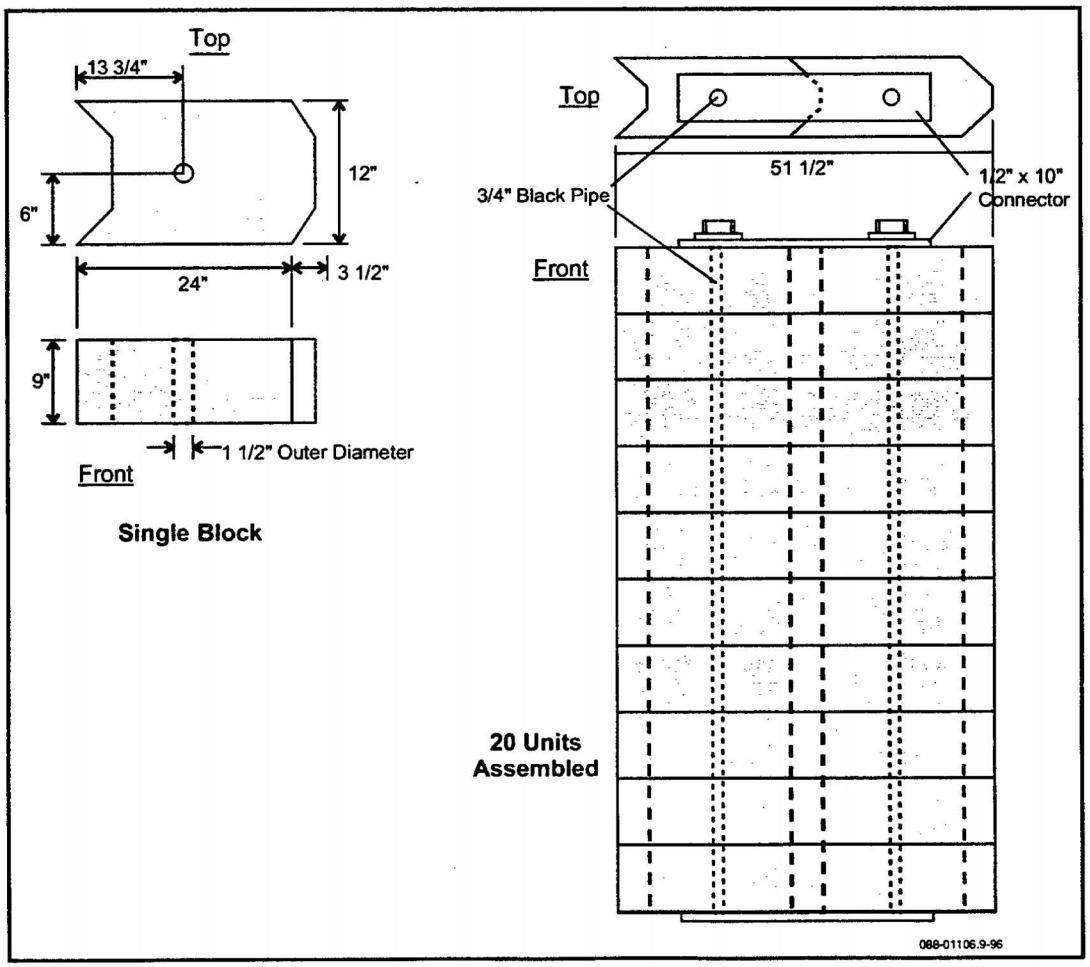

COTS - Tires

General Description: Various ranges have used old vehicle tires, filled with sand or dirt, placed directly behind the targets, as bullet traps. Range personnel must then periodically disassemble the traps, sift the sand, recover the bullet fragments, and replace worn tires. This trapping method differs only slightly from direct fire into an earthen berm, thus reducing any environmental benefit derived from applying bullet traps to small arms ranges. In addition, TRADOC does not recommend this trap due to safety issues.

Ammunition: Up to 7.62 mm.

Capacity: Approximately 10,000 rounds

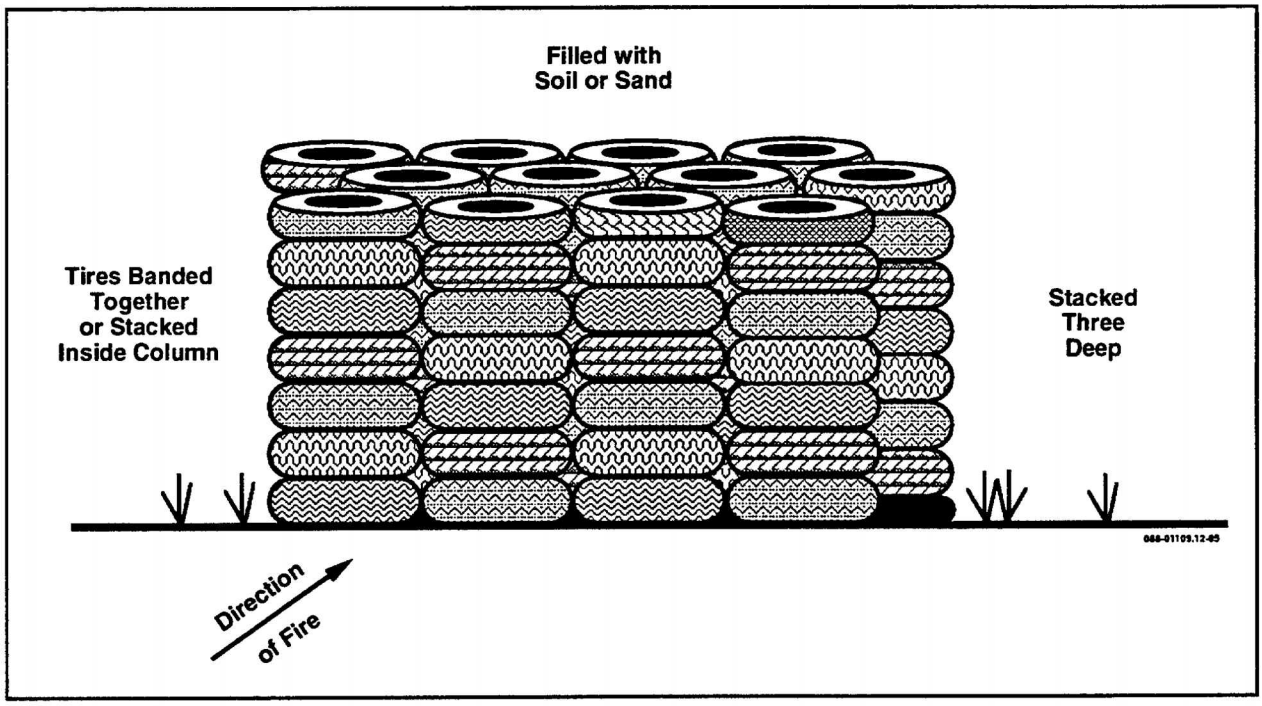

COTS - Wax/Plastic Blocks

General Description: Blocks of various wax and plastic compounds stack to form a barrier. Range personnel can stack the blocks as deep or high as required. Rounds penetrate the blocks and stop at various distances depending on the ammunition used. Rounds embedded in the blocks are difficult to recover and the block material may require disposal.

Ammunition: Up to 7.62 mm.

Capacity: Approximately 10,000 rounds.

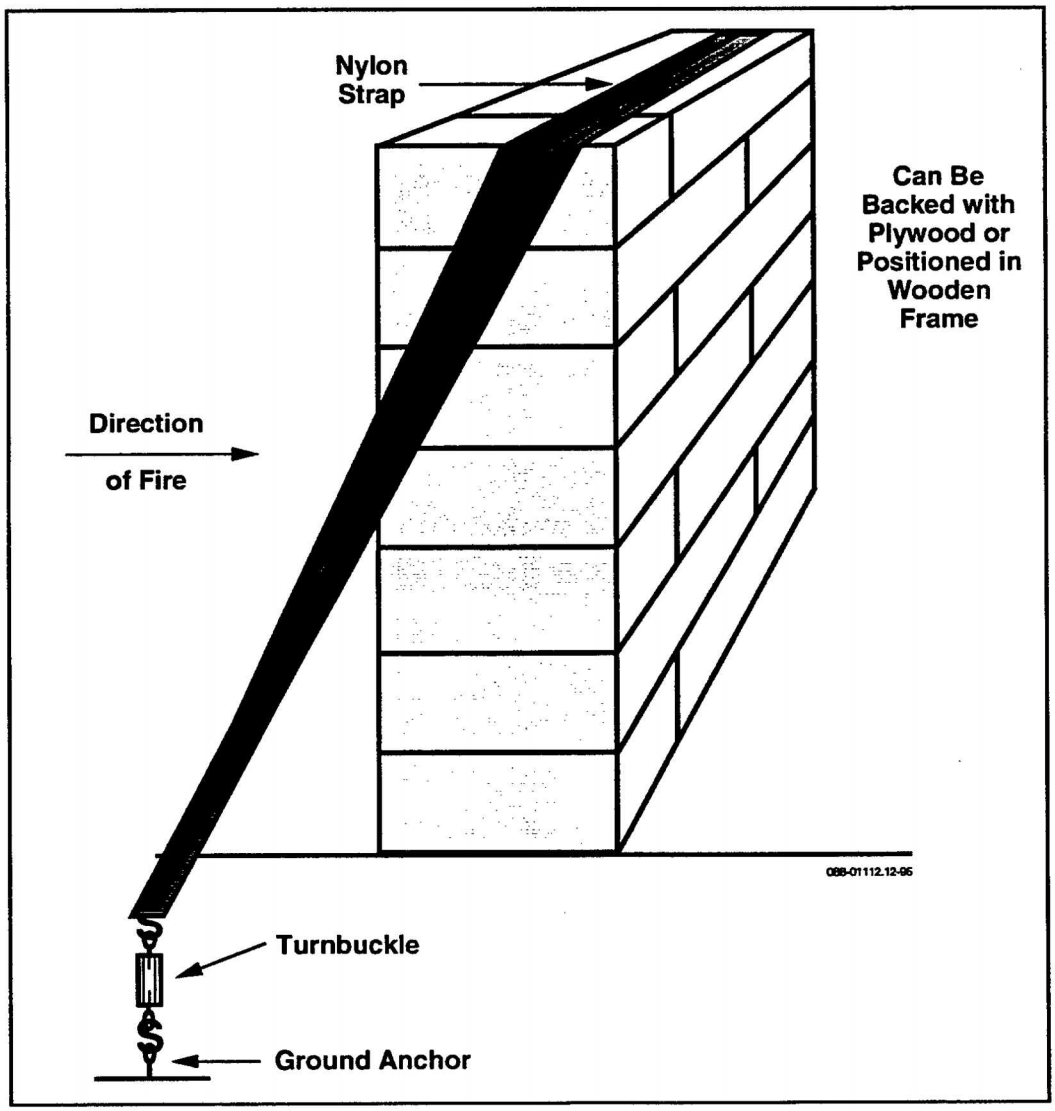

Range Masters - TEC

General Description: The TEC system consists of a set of large blocks molded from shredded, recycled tires in a matrix of Kevlar® reinforced bonding mixture. The blocks weigh approximately 60 pounds each and measure about 30 x 12 x 9 inches. The trap consists of blocks placed on an inclined platform which is protected from oncoming rounds by ground baffles made of the same blocks as the bullet trap. Blocks look similar to oversized cinder blocks. The fired round penetrates the front of the block, shedding velocity until it hits one of the recovery channels, where it falls into the collection tray. Recovery channel positions may be manufactured according to the ammunition type. Intact bullets may be recovered and recycled by emptying the recovery tray at the base.

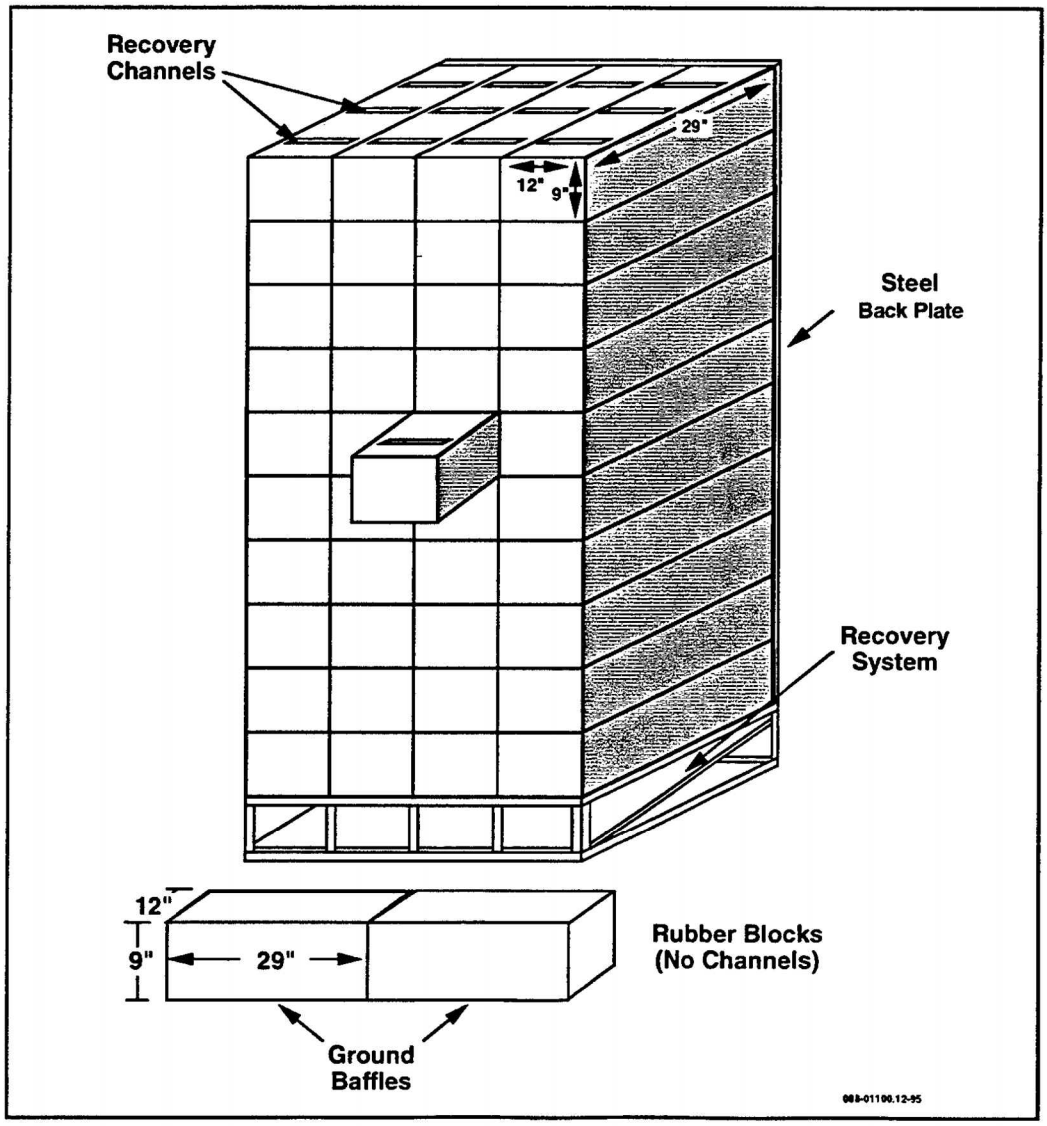

Ammunition: Up to 7.62 mm.

Capacity: The manufacturer claims 10,000 to 20,000 rounds before the blocks need to be rotated, depending upon the type of ammunition used.

Waterways Experiment Station - SACON

General Description: SACON (Shock Absorbing Concrete) combines a low density material (steel fibers or polypropylene fibers) with concrete. The substitution of this material for conventional gravel aggregate achieves densities of 60 to 90 pounds per cubic foot compared to conventional concrete at 150 pounds per cubic foot. This composition allows SACON to absorb bullets and shock waves (e.g. like those generated on light demolition ranges). SACON is poured into preformed molds according to the shape and color determined by the user. Large panels previously applied to indoor ranges were fitted into steel I-beam brackets and grouped into walls. Although the material takes 28 days to cure, applying the blocks in modular, or tile-like format, only requires replacement of the worn or filled blocks, reducing the labor and cost associated with maintenance. Additionally, unlike rubber or wax material, SACON may have the advantage of recyclability (trial recycling tests are underway), reducing or eliminating disposal costs.

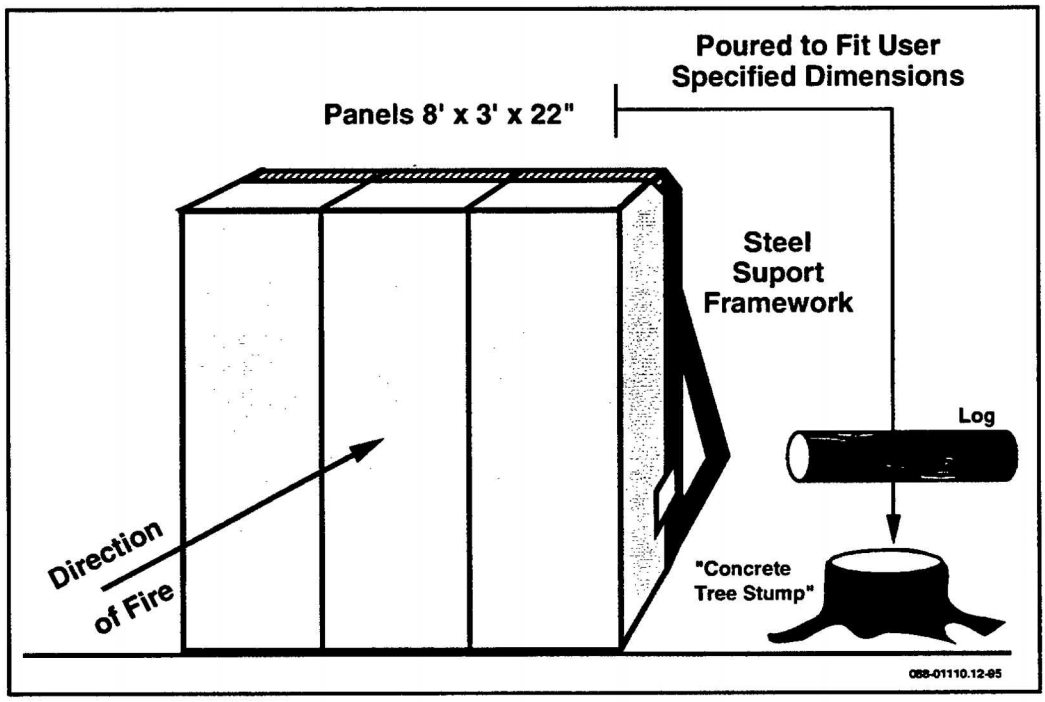

Ammunition: Up to 7.62 mm.

Capacity: Estimated capacity of 10,000 before recycling.

Societa FRA.SA - Elasomeric Granular Screen

General Description: Loose rubber granules lie against a support structure back and a conveyor belt bottom. Bullets enter the granules, lose their velocity and stop. The conveyor belt operates daily to bring the granules and bullets to a sifting/ vacuum system. The vacuum dumps granules (minus the bullets) at the top of the granules pile. Bullets generally remain intact, making recycling relatively easy. Granules may require disposal as hazardous waste.

Ammunition: Up to 7.62 mm.

Capacity: The manufacturer claims 100,000 rounds before replacing the granules.

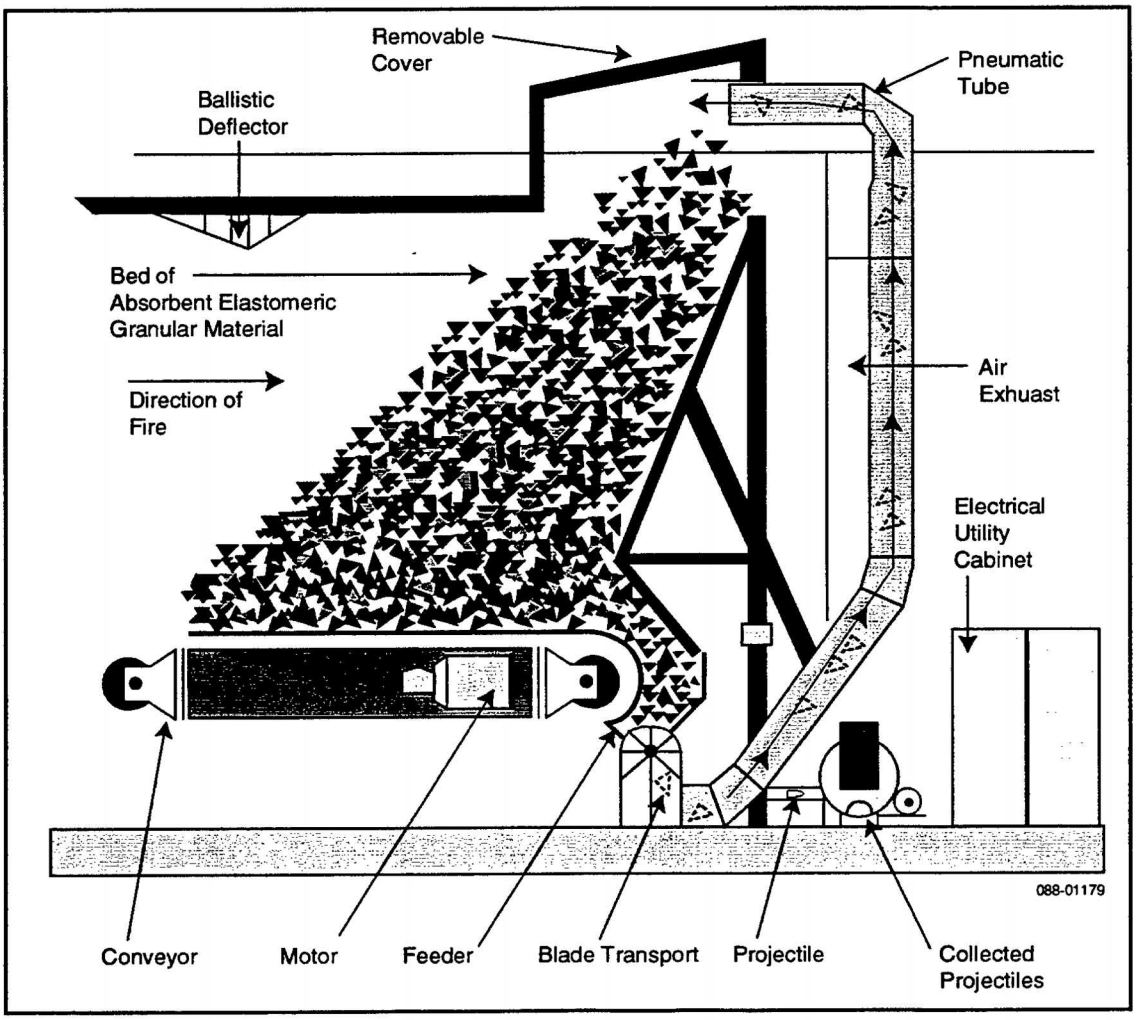

Deceleration

Action Target - Total Containment Trap (TCT)

General Description: This trap has steel plates on top and bottom set at an angle of 12 degrees from horizontal to deflect bullets into the trap. The bullets enter the trap, striking a series of angled impact plates oriented in a circular shape, to direct them into a collection chamber. Steel plates are bolted onto the deceleration chamber for easy removal and replacement. Traps sit on a level concrete base.

Ammunition: Up to 7.62 mm.

Capacity: The initial contact portion of the trap is anticipated to last for 250,000 rounds.

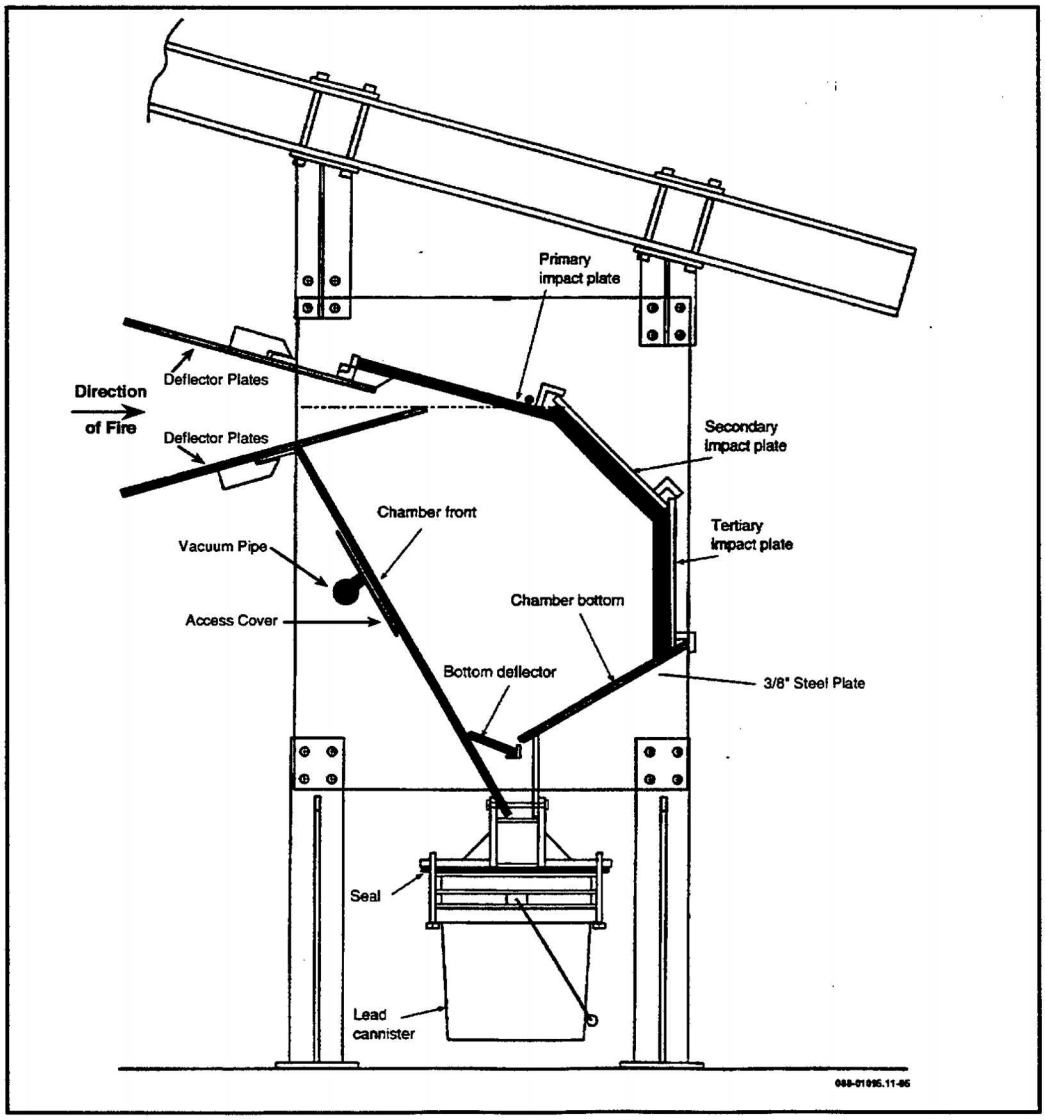

Savage Range Systems - Passive Bullet Trap OM96

General Description: This trap has steel plates on top and bottom set at an angle of 12 degrees from horizontal to deflect bullets into the trap. An injector introduces a fine spray of water and water-soluble oil at the point of entry into the deceleration chamber to coat the bullet. The bullet spins in a vertical plane around the deceleration chamber until it looses its velocity and slides backward to drop through a slot into a collection tray. The unused spray is recycled back into a reservoir. Steel plates are bolted onto the deceleration chamber for easy removal and replacement. Traps sit on a level concrete base.

Ammunition: Up to .50 cal.

Capacity: The initial contact portion of the trap is anticipated to last for at least 250,000 rounds. Up to 25,000 rounds between emptying of the collection tray can be handled before bullets begin backing up into the trap.

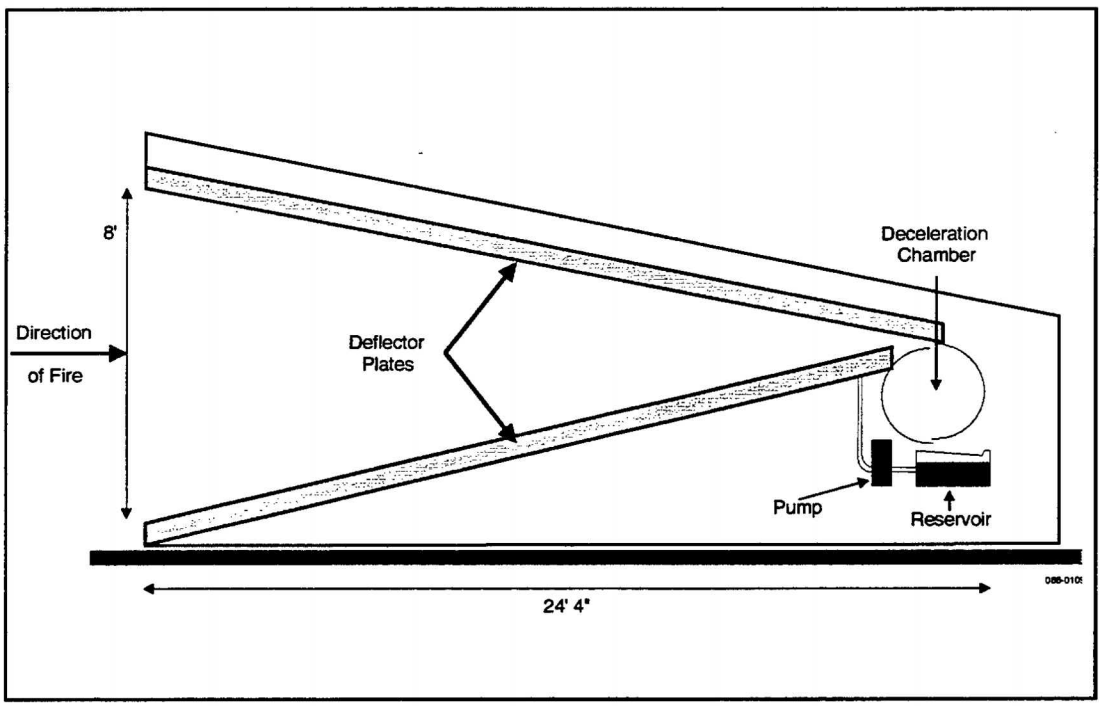

Shooting Ranges International - R493

General Description: This trap has four angled hardened steel plates per firing position to funnel bullets into a vertical aperture of a helical chamber. There, the bullets spin in a horizontal plane until they lose velocity and drop into a collection container. Traps sit on a level concrete base.

Ammunition: Up to 7.62 mm.

Capacity: The initial contact portion of the trap is anticipated to last for at least 500,000 rounds.

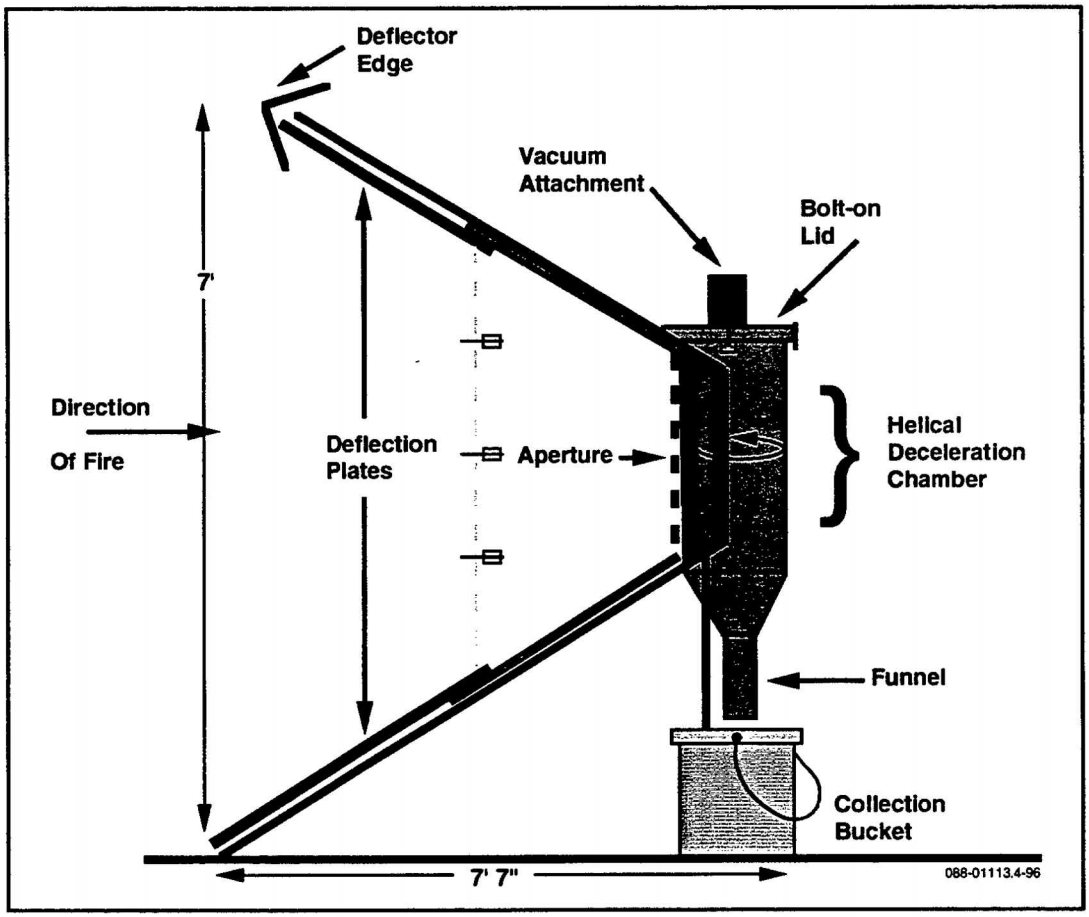

Impact

Action Target - Thunder Ranch

General Description: The Thunder Ranch trap consists of two 2 x 4 lumber legs which form the sides of a steel backed box at the top of the legs. The box which catches the bullets has a 1/4 inch armor plate on the back (30 in. wide by 48 in. high), held in place by lag screws. On the front of the box, a sheet of plywood with a sheet of Linatex attached (on the inside) is screwed into the lumber legs, and 2 x 4s which form the box's top and bottom. Linatex is a self sealing material. Targets are attached to the box front. Angle iron lies against the inside two sides of the box, so that as bullets fragment, they do not excessively wear the 2 x 4 legs. The bullet pierces the trap and hits the Linatex. The Linatex stretches until the bullet contacts the back armor plate and fragments. The Linatex then snaps back and seals, forming a barrier to the bullet fragments. The fragments fall to the bottom of the box for collection. It is believed that by replacing the 2 x 4 legs with 2 x 6's, the life of the Linatex barrier could be extended by up to 50 percent. Ammunition other than standard ball ammunition, such as hollowpoint, wadcutter, or frangible rounds, tends to cause accelerated wear of the Linatex.

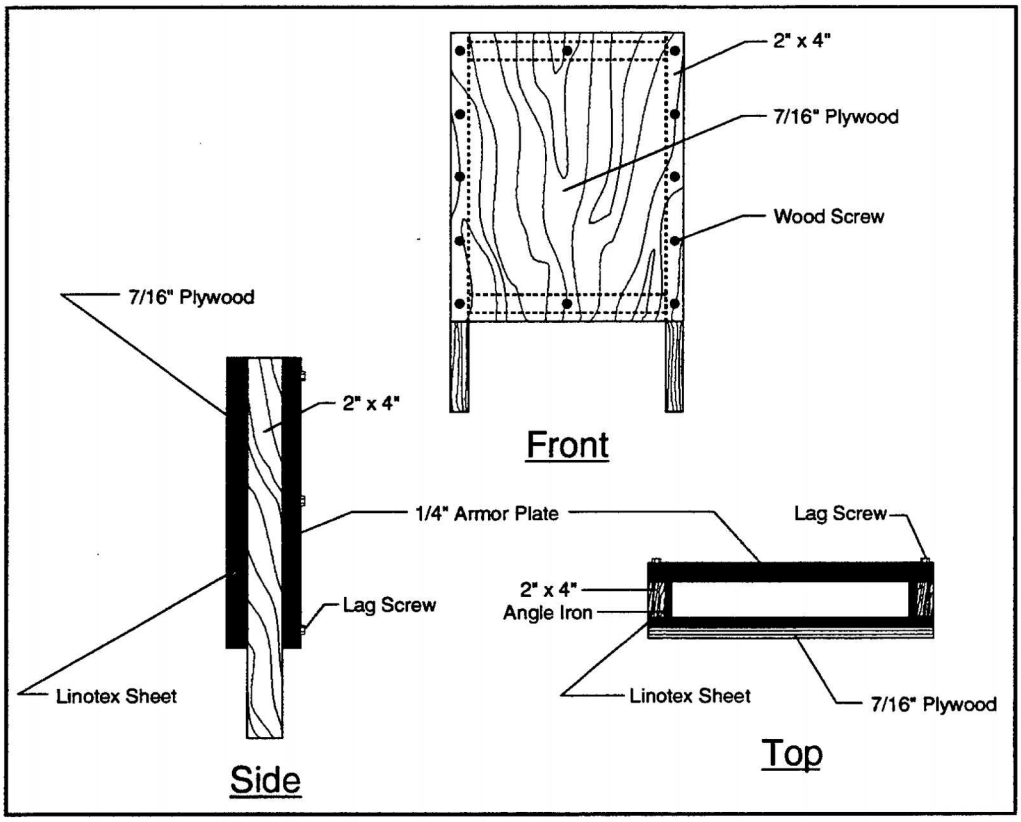

Ammunition: Handgun.

Capacity: Emptying of bullet fragments is recommended at approximately 3,000 rounds. Life of the Linatex barrier will depend on the type of ammunition used, but is expected to be at least 10,000 rounds.

COTS - Escalator Trap

General Description: This trap employs a steel plate angled away from the firing line to direct the bullet upward into another steel plate. At this plate the bullet rebounds or fragments, then slides down the face of the larger plate and into a collection tray. Although most fragments fall downwards onto the range floor for recovery later, the trap does not contain all of these fragments, reducing any potential environmental benefit derived from employing a bullet trap. Maintenance includes sieving/cleaning sand and/or disposal of the sand as hazardous waste.

Ammunition: Up to 7.62 mm.

Capacity: Approximately 250,000 rounds before steel plate replacement.

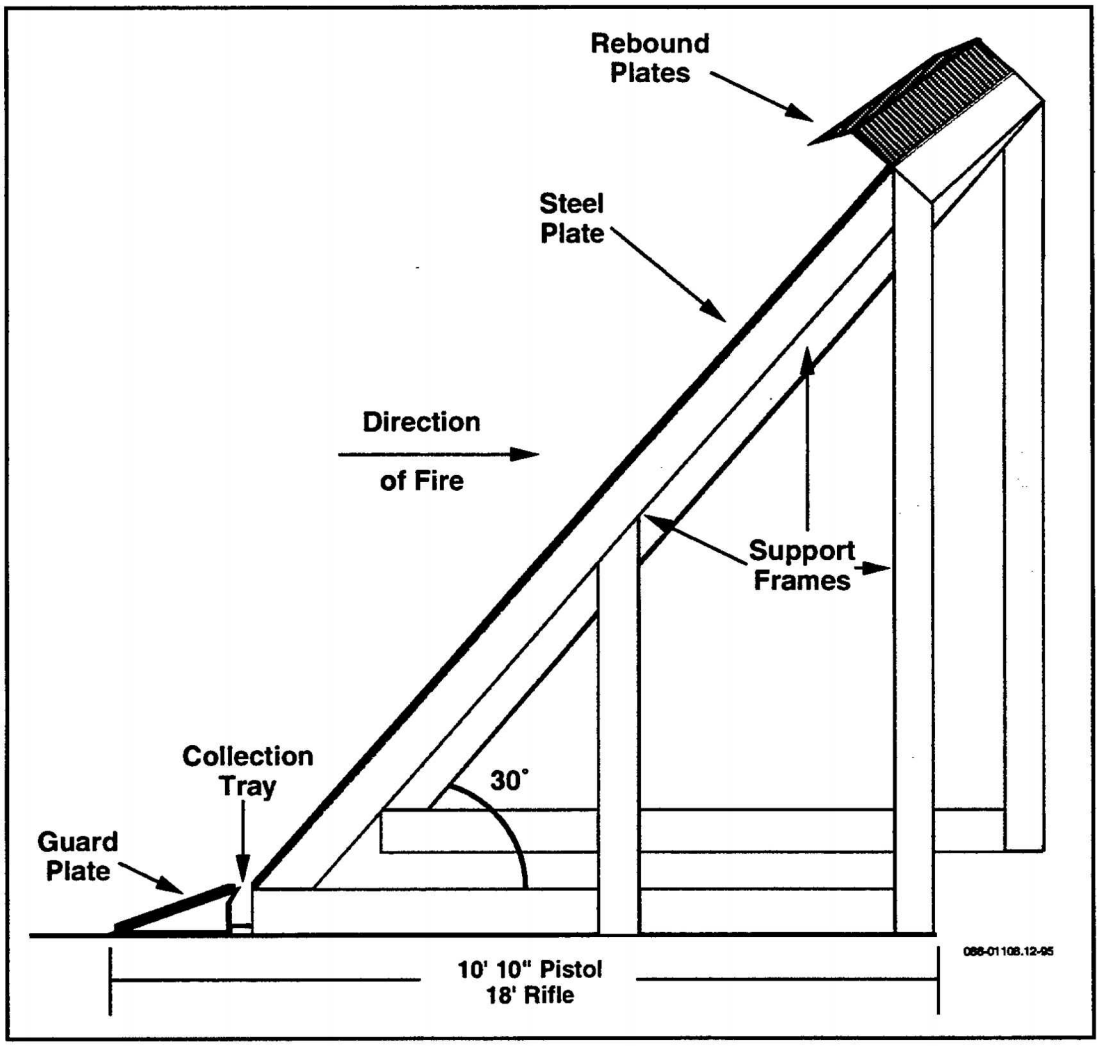

COTS - Sand Trap

General Description: A large steel plate equal to the width of the lane behind the targets is mounted at an angle, tilted forward so that bullets fragment upon impact and are deflected downward into a bed of sand or dirt. Although most fragments fall downward into the sand for recovery, some fragments may land beyond the sand. Maintenance includes sieving/cleaning sand and/or disposal of the sand as hazardous waste.

Ammunition: Up to 7.62 mm

Capacity: Approximately 250,000 rounds before steel plate replacement.

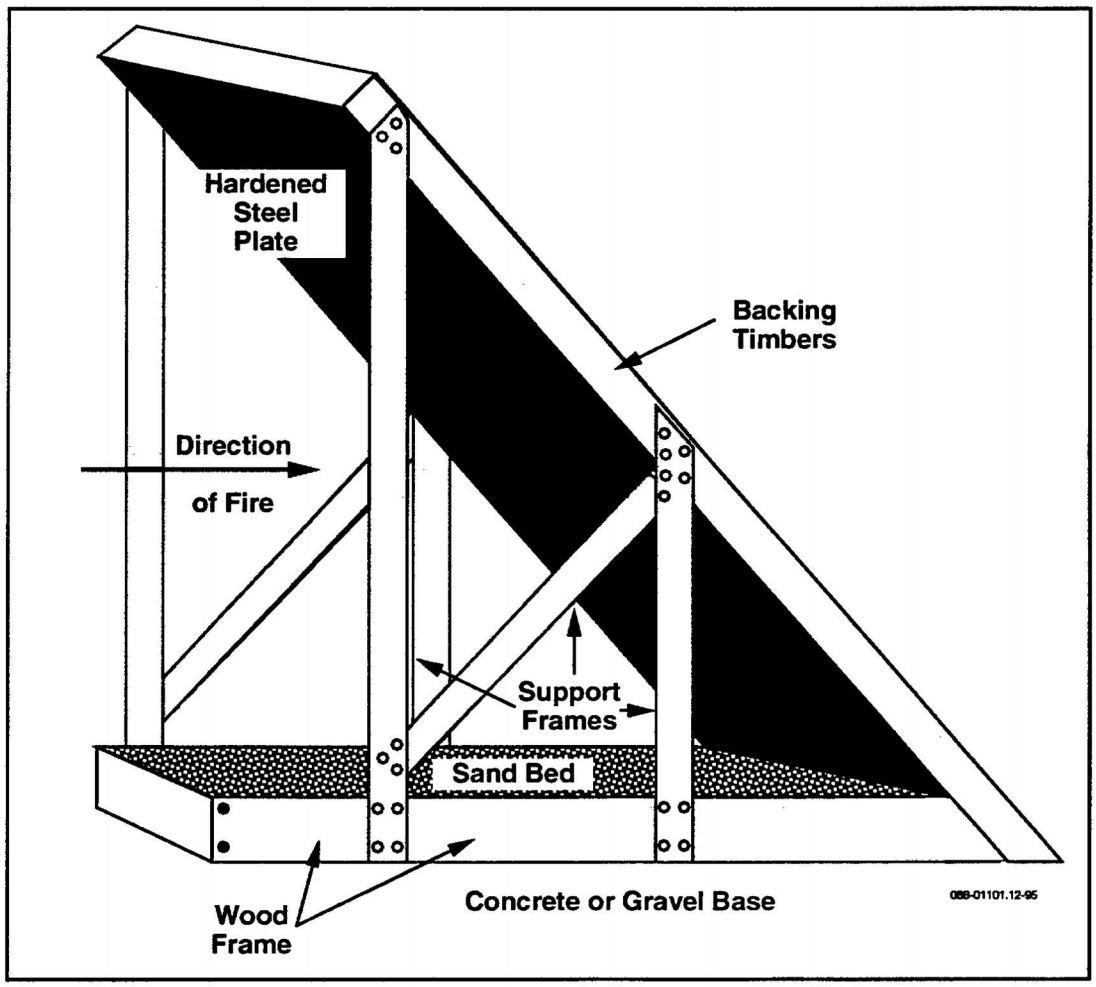

COTS - Steel Louvers with Sand Bed

General Description: This design consist of a series of steel louvers arranged in a vertical rack with each louver angled toward the firing line. The steel louvers are approximately 12" to 18" in width and are arranged to provide some overlap between plates when rounds are fired at angles that are approximately parallel to the floor of the range. This arrangement increases the amount of bullet fragments relative to the escalator or sand/water traps. Bullet fragments fall into a bed of sand beneath the louvers. Maintenance includes sieving/ cleaning sand and/or disposal of the sand as hazardous waste.

Ammunition: Up to 7.62 mm

Capacity: Approximately 250,000 rounds before steel plate replacement.

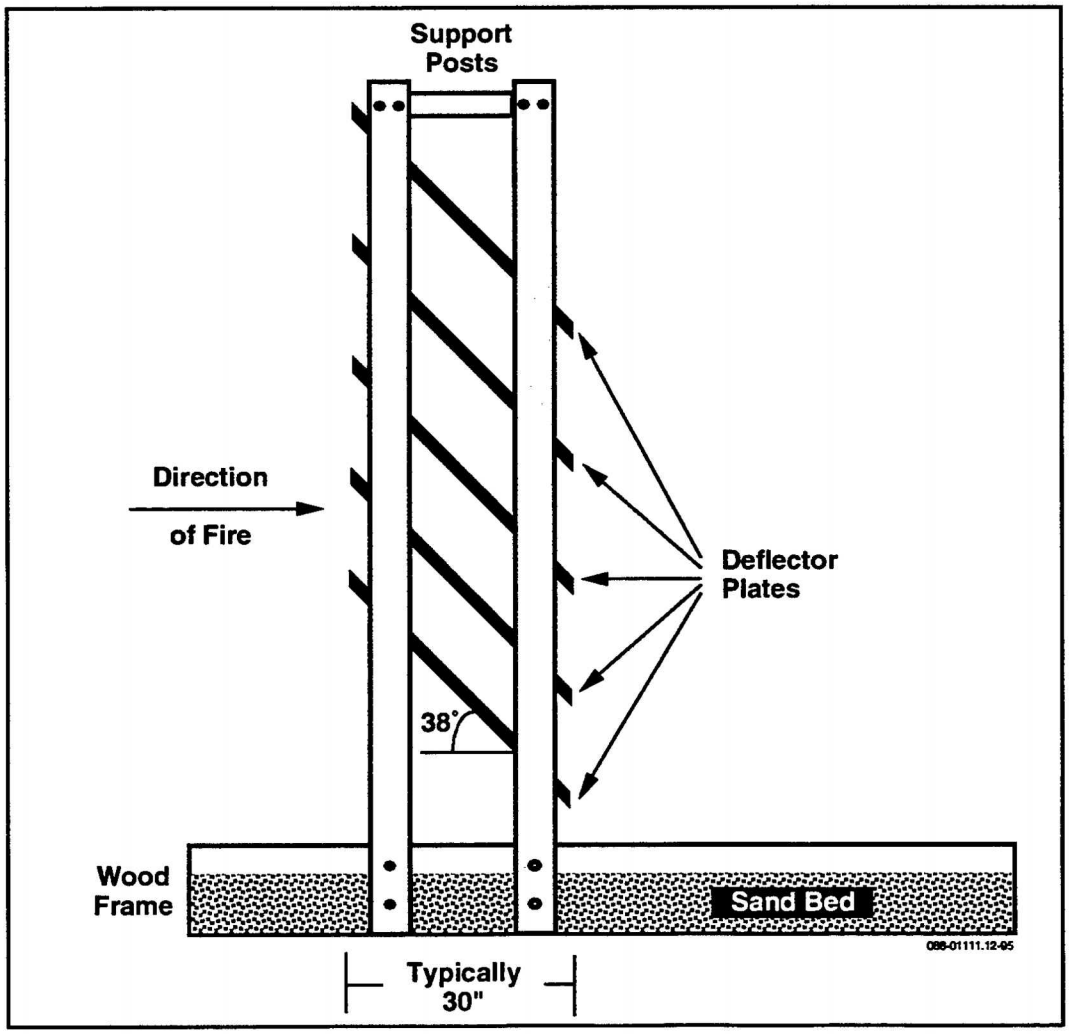

COTS - Water Trap

General Description: A large steel plate, the width of the lane, lies behind the target. It is mounted at an angle and tilted forward so that bullets fragment on impact and are then deflected downward into a container filled with water. Although most fragments fall downward into the water for recovery later, some fragments may land beyound the water. Maintenance includes removing the water by evaporating and recovering solid materials and/or disposal of the water with dissolved metals as hazardous waste.

Ammunition: Up to 7.62 mm

Capacity: Approximately 250,000 rounds before steel plate replacement.

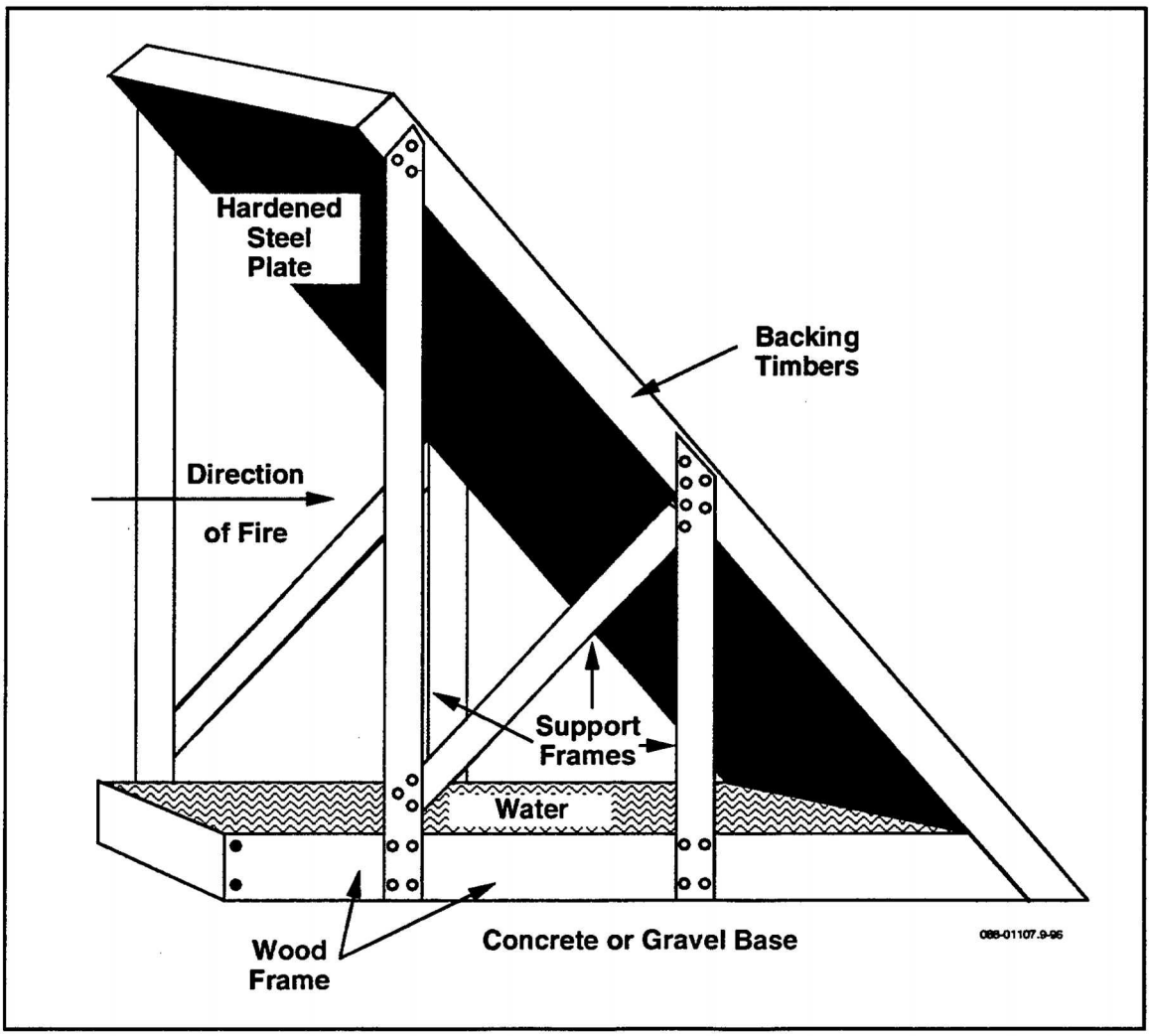

Trap Analysis

Now you have a sense of the available bullet traps and you want to know which trap types apply to your range. Table 1 lists the criteria this analysis uses to evaluate individual traps. It also establishes the acceptable values for some of the criteria. You should select a trap that best meets all of the criteria you establish for your range. Discussions with range managers indicated four general areas for trap evaluation: cost, throughput capacity, range operations, and environmental considerations. These areas of consideration were broken down into the specific criteria listed in Table 1.

Table 2 then applies relative evaluation values to all but the last three criteria listed in Table 1. The reason for applying relative values in this evaluation is that very little testing data exists for these bullet traps at outdoor ranges. Some of the traps have been used extensively for indoor applications, and therefore, cost and maintenance figures are known for these traps. We use relative values because we were not able to obtain the same level of information for all the traps. For example, the symbol $$$$ indicates highest relative cost and the symbol $ indicates lowest relative cost. Also, this analysis uses vendor claims for maintenance duration and not values taken by an independent evaluator.

Table 3 takes the range specific criteria (Masking, Potential Capture Rate, and Giving Away the Target Location), and groups the bullet traps into broad categories according to how they fit these criteria. The table then shows which groups of bullet traps apply at specific target distances. On each range, a bullet trap may or may not work at certain target distances due to masking or because the trap gives away the target location. Recommendations are provided in the comments column to help you better utilize the trap and avoid these problems. Figures 1 through 4 also illustrate why certain categories of traps will or will not work for specific distances, generally due to their ability/inability to let the firer see down range targets (i.e. masking - Table 3). A word of caution also regarding Potential Capture Rates used in this analysis; these are estimates of installation range managers, and not measured individual target hits. The analysis of Masking, or obscuring the firer's view of down range targets, assumes that all ranges are flat or horizontal. Therefore, consider the terrain on your range before assuming target visibility with various traps.

You will notice that Table 2, which displays the general evaluation criteria applied to bullet traps, also contains a summary column, to the far right, which indicates which trap types apply to each of the four ranges: 25 meter, Automated Field Fire, Automated Record Fire, and

Combat Pistol Qualification Course. You can see that all bullet traps do not apply to all small arms ranges. Keep in mind that sometimes an individual trap type will only apply to specific target distance on a specific range type (Table 3). Both Tables 2 and 3 also indicate, by shading, the traps which do not meet the minimum criteria (from Table 1). Those traps which fail the general criteria in Table 2 (don't contain metal fragments) are not further evaluated in Table 3.

25 Meter Range

If you have a 25 meter range, you can see that most of the unshaded traps listed in Table 2 apply to this range (except Burleburger and Action Target which handle handgun ammunition); these traps will functionally and operationally work on your range.

Camouflage & Masking: Camouflage and masking criteria do not apply to the 25 meter range (see Table 3 and Figure 1). Cost and maintenance (i.e. throughput or range down-time) then become the criteria you must use to choose a trap (see Table 2).

Capture Rate: The high potential capture rate for this range (low dispersion of fire -98%) does not influence the bullet trap choice or the layout of bullet traps.

High Target Receive Rate Range: If the range has a high target receive rate (targets which receive 100,000 rounds or more a year) and you will reach 10,000 rounds for a target in only a few months, then the block type friction traps (e.g. rubber, SACON, wood) will create an excessive cost and time burden for range maintenance. For ranges with these high target receive rates, the deceleration traps will create the least cost and maintenance burden.

Low Target Receive Rate Range: Since block friction traps require replacement after 10,000 rounds, only those ranges with low target receive rates (less than 10,000 rounds per target per year) should consider applying these traps.

Moderate Target Receive Rate Range: Venetian blind type friction traps may work for ranges with moderate target receive rates (10,000-100,000 rounds per target per year).

Automated Field Fire Range

All of the deceleration traps and most of the friction traps apply to the Automated Field Fire range.

Camouflage and Masking: These criteria do not apply to this range type.

Capture Rates: Although camouflage and masking do not apply to this range (Table 3) and the target distances (75m, 175m, and 300m) allow for all varieties/sizes of traps (friction and deceleration), the dispersion of fire shown in Figure 2 implies that block or box friction traps (low) will work best in front of target coffins and around/behind the 300 meter target. Laying these block traps out in a modular, or tile like format, may allow you to remove and replace blocks sequentially as they fill up (rotate in new, presized blocks), reducing both the cost and maintenance time.

High Target Receive Rate: Choose from amongst the friction and deceleration traps listed for the 75 meter and the 175 meter targets based upon the volume of fire (target receive rate) on your range. For targets with a receive rate of greater than 100,000 rounds per year deceleration traps will work best. The 175m target, receives twice as many rounds as the other targets (20/40 versus 10/40 per firer), and makes a good candidate for this type of bullet trap, reducing the amount of maintenance required (time and money) relative to the friction traps. For the 75 meters target, which lies closer to the firer, the shape or color of the trap might distract the firer.

Low Target Receive Rate: For targets which receive less than 10,000 rounds per year either friction or deceleration traps will work.

Moderate Target Receive Rate Range: For targets with a moderate to low overall receive rate (between 10,000 and 100,000 rounds annually) consider using the block or box traps for all the targets, although cost may become an issue for these traps given that annual rubber disposal costs may be high.

Automated Record Fire Range

Only some of the friction bullet traps apply to this range.

Camouflage and Masking: The Automated Record Fire Range requires small horizontal targets because the targets lie close to one another and tall traps mask down range targets (see Figure 3, and masking - Table 3). In addition to this masking requirement, the Automated Record Fire Range requires that the targets be hidden from view. Traps must, also blend in with the environment. Therefore, only block friction traps (rubber/wax/wood/plastic) and the granular rubber traps apply to this range.

Figure 3 shows a plan view and cross section view of one lane/ one firing point on an Automated Record Fire Range with bullet impact areas highlighted. You can see from this figure and the text in Table 3 that only camouflage compatible traps which lie low to the ground will work for this type of range. Other taller traps obstruct down range targets and/or will give away the target location. The box granular friction traps must be reconfigured to lie on their side, or belly up, using either colored rubber facing or replaceable camouflage netting over the traps. The rubber or concrete block friction traps or COTS block friction traps must also lie flush with the ground and utilize camouflage or embedded coloring.

Capture Rate: By increasing the size of these horizontal traps or laying them out like floor tiles to match the bullet impact areas or beaten zones you potentially increase the bullet capture rate per target. Utilizing a tile-like format may prove most useful and cost effective with regard to maintenance because this allows easier maintenance for those areas receiving the highest volume of fire. Blocks which "fill-up" first may be rotated out and replaced with preformed presized blocks.

Target Receive Rate (High, Low, Medium): This criteria does not appear to influence trap choice.

Combat Pistol Qualification Course

Most of the bullet traps, which meet minimum criteria, apply to the Combat Pistol Qualification Course.

Camouflage and Masking: The Combat Pistol Qualification Course requires small horizontal targets out to 16 meters because these targets lie close to one another. Taller traps will not allow the firer to see down range targets (see Figure 4, and Masking - Table 3). Therefore, only block friction traps (rubber/wax/wood/plastic/REGUPOL) and the granular rubber traps apply to the 10, 13 and 16 meters targets. These traps must lie close to the ground to avoid masking. The REGUPOL block trap can handle handgun ammunition and is added to the list of block traps used at the other three ranges.

The 17, 23 and 27 meter targets have a wider spread. A shortened version of a boxed granular trap or a venetian blind trap as well as the block friction traps (rubber/wax/wood/plastic/REGUPOL) applies to these target distances. The last target, at 31 meters, may use these same traps as well as a deceleration trap because no targets lie behind it.

The Action Target - Thunder Ranch trap is the only impact type trap which meets the minimum evaluation criteria from Table 2, and also applies to the Combat Pistol Qualification Course (handles handgun ammunition). Its physical size precludes it for the 10, 13 and 16 meter targets, but it applies from 17 out to 31 meters. These traps are easily maintained in place by removing the front plate with a screw driver and replacing with a preconstructed replacement panel. They also have the added benefit of inherent mobility, and therefore, the ability to rotate traps on and off the range for major maintenance (back plate replacement).

Capture Rates: For targets from 16 to 31 meters (capture rates of 75% and lower), you may lay out modular traps like floor tiles to match the bullet impact zones to increase the bullet capture rate per target. Utilizing a tile-like format may prove useful and cost effective with regard to maintenance. It allows easier maintenance for those areas receiving the highest volume of fire. Blocks which "fill up" first may be rotated out and replaced with preformed presized blocks.

Target Receive Rate (High, Low, Medium): This criteria may influence the variety of friction trap you choose (some have a higher number of rounds before replacement - see Table 2). Alternatively, this criteria may lead you to choose the Action Target trap (for the 17 to 31 meter targets) which is estimated to take 200,000 rounds before replacement.

Some General Issues which are Independent of Trap or Range Type

Personnel Protective Equipment: During the initial maintenance cycle and during initial recycling bullets from these traps, it is recommended that you monitor both the air and your personnel as well as choose the proper level of personal protective equipment. At a minimum, a mask and gloves are recommended. Check with the installation safety officer for OSHA requirements.

Disposal: Regardless of the trap type, you will need to find a lead recycler for the recovered rounds. This may produce funds to offset the cost of eventually disposing of rubber/plastic/wood/SACON when the material can no longer function properly. You must coordinate the recycle and/or disposal of hazardous material (lead) with the installation environmental staff to ensure compliance with Federal, State, and local regulations.

Ft. Drum, which has a venetian blind friction trap, tested the rubber material from the bullet trap. This material yielded an average Toxicity Characteristic Leaching Procedure (TCLP) reading of 2232 mg/L of lead and 9.9 mg/L for zinc. The maximum allowable limit for lead is 5 mg/L. They, therefore, were required to dispose of this material as hazardous waste.

Table 1 - Minimum Acceptable Levels for Evaluation Criteria

Areas	EVALUATION CRITERIA	ACCEPTABLE VALUES
C	Capital cost	No maximum values established
C	Maintenance cost	No maximum values established
E	Does it catch all rounds which enter?	Yes
E	Does it contain all metal fragments within the confines of the trap?	Yes
C,E	Does the trap require costly disposal of mixed trap material and lead rounds?	No value established, but influences maintenance cost
O	What is the maximum ammunition size the trap can handle?	25 M: 7.62 AFF: 7.62 ARF: 7.62 CPQC: handgun
T	How many rounds can the trap handle before major refurbishment (repair)?	25 M: 150,000 AFF: 100,000 ARF: 30,000 CPQC: 30,000
T	What is the duration of the annual (major) maintenance (down time for the range)?	max. 1 week
T	What is the duration of the monthly maintenance required to keep the trap in good working order (down time for the range)?	max. 1 day
O	Does the trap mask (obscure the firer's view) down range targets?	25 M: Not applicable AFF: No masking ARF: No masking CPQC: No masking
E	Potential capture rate	25 M: Minimum 98% AFF: Minimum 80% ARF: Minimum 60% CPQC: Minimum 80%
O	Does the trap give away the target location?	25 M: Not applicable AFF: Not applicable ARF: May not give away location CPQC: Not applicable

Areas: Discussions with range managers indicated four general areas of consideration for applying bullet traps on small arms ranges (C=Cost, O=Operations, T=Throughput Capacity and E=Environmental).

Table 2 - Bullet Trap Evaluation by Individual Criteria

Trap Type	Cost		Performance				Maintenance			Applicable Range Type			
	Capital Cost	Mainten-ance Cost (per year)	Catch Rounds ?	Contain Metal Frag-ments?	Dispose Rubber/ Plastic/ Metal/ Wood?	Ammun. applicable (up to and including)	# Rounds to replacement or major refurbishment (per lane)	Duration of Annual Maintenance (for 20 firing points)	Duration of Monthly Maintenance (for 20 firing points)	25 m	AFF	ARF	CPQC
Deceleration:													
Action Target-TCT	$$$$	$$	Y	Y	N	7.62	250,000	1 day	2-3 hours	•	•		•
Savage-OM96	$$$$	$$	Y	Y	N	.50 cal.	250,000	1 day	2-3 hours	•	•		•
Shooting Rngs Int.- R493	$$$$	$$	Y	Y	N	7.62	500,000	1 day	2-3 hours	•	•		•
Impact:													
Action Target-Thunder Rch	$	$	Y	Y	N	handgun	10,000	1 day	1 hour				•
COTS-Escalator	$	$	Y	N	N	7.62	250,000	1 day	1 hour				
COTS-Sand	$	$$$	Y	N	Y	7.62	250,000	1 day	1 hour				
COTS-Steel Louver	$	$	Y	N	N	7.62	250,000	1 day	1 hour				
COTS-Water	$	$	Y	N	Y	7.62	250,000	1 day	1 hour				
Friction:													
Burleburger-REGUPOL	$$$	$$$	Y	Y	Y	handgun	10,000	2-3 days	2-3 hours				•
Capito-Granular Trap	$$$$	$$$	Y	Y	Y	.50 cal.	25,000	1 week	1 day	•	•	•	•
Caswell-Gran Trap	$$$$	$$$	Y	Y	Y	.50 cal.	50,000	1 week	1 day	•	•	•	•
Caswell-Lamella	$$$$	$$$	Y	Y	Y	.50 cal.	50,000	2-3 days	2-3 hours	•	•		•
COTS-Logs	$	$$$	Y	Y	Y	7.62	10,000	1 week	2-3 hours	•	•	•	•
COTS-Rubber Blocks	$	$$$	Y	Y	Y	7.62	10,000	1 week	2-3 hours	•	•	•	•
COTS-Tires	$	$$$	Y	Y	Y	7.62	10,000	1 week	2-3 hours	•			•
COTS-Wax/Plastic Blocks	$	$$$	Y	Y	Y	7.62	10,000	1 week	2-3 hours	•	•	•	•
Range Masters-TEC	$$$	$$$	Y	Y	Y	7.62	10,000	2-3 days	2-3 hours	•	•	•	•
WES-SACON	$$	$$	Y	Y	N	7.62	10,000	2-3 days	2-3 hours	•	•	•	•
Societa FRA-Eastomeric	$$$$	$$$	Y	Y	Y	7.62	100,000	1 week	1 day	•			

COTS=Commercial Off-the-Shelf Materials; $=lowest cost, $$$$=highest cost; Y=Yes; N=No; shaded= does not meet minimum criteria; bold=criteria not met

Table 3
Bullet Trap Evaluation Which Distinguish the Four Range Types

Range Type & Target Distances	Masking (Yes/No/ NA)	Potential Capture Rate (percent)	Give Away Trap Location (Yes/No/NA)	Comments
25m:				
Helical Deceleration (Action Target- TCT, Savage-OM96, Shooting Ranges Int.-R493) **	NA	98	NA	
Venetian Blind Friction (Caswell-Lamella)	NA	98	NA	
Rubber Block Friction (Range Masters-TEC)	NA	98	NA	
Concrete Block Friction (WES-SACON)	NA	98	NA	
Granular Rubber Friction (Capito-Granular Trap, Caswell-Gran Trap, Societa FRA-Elastom.)	NA	98	NA	
COTS Friction (Logs, R. Blck, Tires, Wx/Pl. Blck)	NA	98	NA	
Automat. Field Fire (AFF):				
Helical Deceleration (Action Target- TCT, Savage-OM96, Shooting Ranges Int.-R493)				
75m	No	70	NA	size to avoid masking
175m	No	60	NA	size to avoid masking
300m	No	30	NA	
Venetian Blind or Granular Friction (Caswell-Lamella, Capito-Granular Trap, Caswell-Gran Trap, Societa FRA-Elastom.)				
75m	No	>70	NA	size to avoid masking
175m	No	>60	NA	size to avoid masking
300m	No	>30	NA	
Rubber or concrete Block Friction (Range Masters-TEC, WES-SACON); and COTS Friction (Logs, R. Blck, Tires, Wx/Pl. Blck)				
75m	No	approx. 80	NA	utilize vertical and horizontal blocks
175m	No	approx. 80	NA	utilize vertical and horizontal blocks
300m	No	approx. 80	NA	utilize vertical and horizontal blocks
Automat. Record Fire (ARF):				
Helical Deceleration (Action Target- TCT, Savage-OM96, Shooting Ranges Int.-R493)				
50m	No	85	**Yes**	unlikely to camouflage
100m	No	75	**Yes**	unlikely to camouflage
150m	Yes	65	**Yes**	unlikely to camouflage
200m	Yes	50	**Yes**	unlikely to camouflage
250m	Yes	30	**Yes**	unlikely to camouflage
300m	No	30	**Yes**	unlikely to camouflage
Box Granular Friction (Capito-Granular Trap, Caswell-Gran Trap.)				
50m	No	85	No	lay flush with ground; camouflage
100m	No	75	No	lay flush with ground; camouflage
150m	No	65	No	lay flush with ground; camouflage
200m	No	50	No	lay flush with ground; camouflage
250m	No	30	No	lay flush with ground; camouflage
300m	No	30	No	lay flush with ground; camouflage

**Bullet trap manufacturers are grouped according their size/shape/modular nature and compatibility with camouflage.
Shaded=does not meet range specific criteria; Bold=criteria not met.

(Table 3 continued)

Range Type & Target Distances	Masking (Yes/No/ NA)	Potential Capture Rate (percent)	Give Away Trap Location (Yes/No/NA)	Comments
Venetian Blind or Open Granular Friction (Caswell Lamella, Societa FRA-Elastom.)				
50m	No	85	**Yes**	unlikely to camouflage
100m	No	75	**Yes**	unlikely to camouflage
150m	Yes	60	**Yes**	unlikely to camouflage
200m	Yes	50	**Yes**	unlikely to camouflage
250m	Yes	30	**Yes**	unlikely to camouflage
300m	No	30	**Yes**	unlikely to camouflage
Rubber or concrete Block Friction (Range Masters-TEC, WES-SACON); and COTS Friction (Logs, R. Blck, Tires, Wx/Pl. Blck)				
50m	No	>85	No	mold/color blocks to blend with env.; utilize vertical and horizontal blocks
100m	No	>75	No	mold/color blocks to blend with env.; utilize vertical and horizontal blocks
150m	No	>65	No	mold/color blocks to blend with env.; utilize vertical and horizontal blocks
200m	No	>50	No	mold/color blocks to blend with env.; utilize vertical and horizontal blocks
250m	No	>30	No	mold/color blocks to blend with env.; utilize vertical and horizontal blocks
300m	No	>30	No	mold/color blocks to blend with env.; utilize vertical and horizontal blocks
Combat Pistol Qual. Course:				
Helical Deceleration (Action Target- TCT, Savage-OM96, Shooting Ranges Int.-R493)				
10m	**Yes**	95	NA	will mask view of down-range targets
13m	**Yes**	90	NA	will mask view of down-range targets
16m	**Yes**	75	NA	will mask view of down-range targets
17m	**Yes**	75	NA	will mask view of down-range targets
23m	**Yes**	65	NA	will mask view of down-range targets
27m	**Yes**	65	NA	will mask view of down-range targets
31m	No	50	NA	
Box Granular Friction (Capito-Granular Trap, Caswell-Gran Trap.)				
10m	No	95	NA	lay near flush with ground
13m	No	90	NA	lay near flush with ground
16m	No	75	NA	lay near flush with ground
17m	No	75	NA	lay near flush with ground
23m	No	65	NA	lay near flush with ground
27m	No	65	NA	lay near flush with ground
31m	No	50	NA	lay near flush with ground

**Bullet trap manufacturers are grouped according their size/shape/modular nature and compatibility with camouflage.
Shaded=does not meet range specific criteria; Bold=criteria not met.

(Table 3 continued)

Range Type & Target Distances	Masking (Yes/No/ NA)	Potential Capture Rate (percent)	Give Away Trap Location (Yes/No/NA)	Comments
Venetian Blind (Caswell Lamella)				
10m	**Yes**	95	NA	size masks view of down-range targets
13m	**Yes**	90	NA	size masks view of down-range targets
16m	**Yes**	75	NA	size masks view of down-range targets
17m	No	75	NA	size to avoid masking
23m	No	65	NA	size to avoid masking
27m	No	65	NA	size to avoid masking
31m	No	50	NA	
Open Granular Friction (Societa FRA-Elastom.)				
10m	**Yes**	95	NA	size masks view of down-range targets
13m	**Yes**	90	NA	size masks view of down-range targets
16m	**Yes**	75	NA	size masks view of down-range targets
17m	**Yes**	75	NA	size masks view of down-range targets
23m	**Yes**	65	NA	size masks view of down-range targets
27m	**Yes**	65	NA	size masks view of down-range targets
31m	No	50	NA	
Rubber or concrete Block Friction (Range Masters-TEC, WES-SACON, Burleburger-REGUPOL)				
10m	No	95	NA	mold/color blocks to blend with env.; use horizontal blocks in-front of target
13m	No	90	NA	mold/color blocks to blend with env.; use horizontal blocks in-front of target
16m	No	75	NA	mold/color blocks to blend with env.; use horizontal blocks in-front of target
17m	No	75	NA	mold/color blocks to blend with env.; use horizontal blocks in-front of target
23m	No	65	NA	mold/color blocks to blend with env.; use horizontal blocks in-front of target
27m	No	65	NA	mold/color blocks to blend with env.; use horizontal blocks in-front of target
31m	No	50	NA	mold/color blocks to blend with env.; use horizontal blocks in-front of target
Steel-backed wooden box Impact (Action Target-Thunder Ranch)				
10m	**Yes**	95	NA	size masks view of down-range targets
13m	**Yes**	90	NA	size masks view of down-range targets
16m	**Yes**	75	NA	size masks view of down-range targets
17m	No	75	NA	size to avoid masking
23m	No	65	NA	size to avoid masking
27m	No	65	NA	size to avoid masking
31m	No	50	NA	size to avoid masking

**Bullet trap manufacturers are grouped according their size/shape/modular nature and compatibility with camouflage.
Shaded=does not meet range specific criteria; Bold=criteria not met.

Pointers for Potential Buyers

Here are some questions to ask when calling manufacturers:

- Can the trap be sized to my specifications ?
- For block traps, can they be manufactured in modular form ?
- Can the traps be colored (surface or full body) to blend-in with the environment ?
- Will you provide all the materials, manpower and equipment for installation ?
- Is installation included in your quoted price ?
- Do I need a concrete base for the trap and if so do I need any specific anchoring hardware within the concrete ?
- How much clearance space do I need around each trap for installation and maintenance ?
- Warrantee Information: Do you guarantee that the trap performs as specified (catch bullets up to the size claimed) and will you replace all or part of the trap at no extra charge if portions of the trap do not perform as specified ?
- When will you test the traps to determine that they meet performance specifications ?
- Are there any scheduling requirements that I should know about ? Tell me about curing times for block traps. Tell me about the order in which the site preparation and installation will take place (for example: base construction by the installation, frame construction by the manufacturer, trap installation, and trap testing).

Conclusions

This evaluation concludes that bullet traps provide an environmentally sound alternative to firing directly into the environment at small arms ranges. They have the potential to retain metal fragments and prevent erosion on ranges.

Applicable Bullet Traps

The following list, by range type summarizes the bullet traps which apply to these ranges at specific distances:

25 meter Range:

Deceleration traps will work best for high target receive rate ranges (>100,000 rounds per year per target) (Action Target - TCT; Savage - OM96; Shooting Ranges International - R493).

Friction traps will work for ranges with lower target receive rate, particularly those with less than 10,000 rounds per year per target (Capito - Granular Trap; Caswell - Gran Trap; Caswell - Lamella, COTS-Logs, Rubber Blocks, Wax, Plastic; Range Masters - TEC; WES SACON; Societa FRA - Elastomeric).

Automated Field Fire:

Deceleration traps will work best for high target receive rate ranges (>100,000 rounds per year per target) and particularly for the 175 meter target which generally receives the highest volume of fire per firing lane (Action Target - TCT; Savage - OM96; Shooting Ranges International - R493).

Friction traps will work for ranges with lower target receive rates, particularly those with less than 10,000 rounds per year, per target (Capito - Granular Trap; Caswell - Gran Trap; Caswell - Lamella, COTS-Logs, Rubber Blocks, Wax, Plastic; Range Masters - TEC; WES - SACON).

Automated Record Fire:

Friction traps will work for this range which requires camouflage and low traps to avoid masking. You may apply these traps in a modular format, like tiles, rotating out the parts which fill up first and replacing them with a presized, preformed modules (Capito - Granular Trap; Caswell - Gran Trap; COTS-Logs, Rubber Blocks, Wax, Plastic; Range Masters - TEC; WES - SACON).

Combat Pistol Qualification Course:

Deceleration traps will work only for the 31 meter target where masking is not an issue (Action Target - TCT; Savage - OM96; Shooting Ranges International - R493).

Friction traps will work for this range which requires horizontal traps, nearly flush with the ground, out to 16 meters (Capito - Granular Trap; Caswell - Gran Trap; COTS-Logs, Rubber Blocks, Wax, Plastic; Range Masters - TEC; WES SACON, and Burleburger - REGUPOL), and moderate height traps will work from 17 to 31 meters (no higher than the target) (same list plus Caswell - Lamella).

Impact traps will work from 17 to 31 meters if they are sized accordingly to avoid masking (Action Target - Thunder Ranch). These traps have the added benefits of easy maintenance in place, or because of their mobility, they are easily rotated with new traps, on and off the range, for major maintenance.

Recommendations

Given the lack of good cost and performance data for these traps on outdoor ranges, actual outdoor performance tests across the four range types would lend credibility to this analysis and allow potential buyers to base their decisions on actual performance figures rather than estimated relative values.

Test should verify: cost information (capital and lifecycle costs); installation and maintenance durations; personal protective equipment requirements; the number of rounds before monthly and major refurbishment; verify the disposal requirements and costs for the trap material; and that traps are compatible with masking and camouflage requirements on the ranges.

At a minimum, testing should include ranges in at least the three major climate areas, the Southeast, the Midwest or Northeast, and the Southwest. Each climate has its own set of challenges. The southeastern US has a hot, wet climate with sandy soil that requires care in the preparation of the bases upon which to install the traps. Accelerated rusting or mildew and mold may weaken portions of the trap structure, leading to failure or increased maintenance costs. The Northeast and Midwest have a broad range of temperatures, from very hot and humid to well below freezing. The extensive freeze-thaw cycles may cause problems

with trap components, bases, or performance. Traps may freeze to a point where they could shatter or cause ricochets. These areas also tend to have a clay soil, with attendant drainage problems. The Southwest is windy, hot, dry, and the soil tends to be sandy and rocky. Trap components may dry out and crack in this environment.

Appendix A - References

Heath, J.C., L. Karr, V. Novstrup, B. Nelson, S.K. Ong, P. Aggarwal, J. Means, S. Pomeroy, and S. Clark, 1991, Environmental Effects of Small Arms Firing Ranges, Naval Civil Engineering Laboratory Technical Note, Port Hueneme, CA, 57 pp.

U.S. Army, February 1992. *Training Ranges*, Department of the Army Training Circular 25-8.

U.S. Army Environmental Center, March 1996. *Bullet Trap Feasibility Assessment and Implementation Plan, Technology Identification Final Report,* SFIM-AEC-ET-96005.

U.S. Army Environmental Center, April 1996. *Bullet Trap Feasibility Assessment and Implementation Plan, Evaluation Criteria Report,* SFIM-AEC-ET-CR-96142.

Appendix B - Manufacturer Addresses and Phone Numbers

Action Target
P.O. Box 636
Provo, UT 84603
Phone: 801-377-8033; FAX: 801-377-8096

Ballistic Technology Inc. (SACON)
1041 Avenue Road, Suite 4
Toronto, Ontario M5N 2C5
Phone: 416-932-0208; Fax: 416-932-0460

Berleburger Schaumstoffwerk GMBH
P.O. Box 1180
5920 Bad Berleberg, Germany
US Distributor: Tennek, Inc.
972 Tapadevo Road
Bailey, CO 80421
Phone: 303-838-0922; FAX: 303-838-0924

Caswell International Corp.
1221 Marshall St. NE
Minneapolis, MN 55413
Phone: 612-379-2000; FAX: 612-379-2367

Capito & Assenmacher
44319 Dortmund Wichkede
44311 Dortmund
Germany
Phone: 0231 331012-0; FAX: 21925

Range Masters, Inc.
199 Coon Rapids Blvd.
Suite 304
Coon Rapids, MN 55433
Phone: 612-357-4104; FAX: 612-357-4105

Savage Range Systems, Inc.
100 Springdale Rd.
Westfield, MA 01085
Phone: 413-568-7001; FAX: 413-562-7764

Societa FRA.SA
Rome - Via del Giordano, 44
Italy
Phone: 59-25-560 or 59-11-936; FAX: 59-24-175

Shooting Ranges International, Inc.
3030 S. Valley View Blvd.
Las Vegas, NV 89102
Phone: 702-876-5444; FAX: 702-876-0327

U. S. Army Corps of Engineers
Waterways Experiment Station
Structures Laboratory, Attn: CEWES-SC-EM
3909 Halls Ferry Road
Vicksburg, MS 39180-6199
Attn: Dr. Philip Malone
601-634-3960