AUTOMATIC AND CONCEALABLE FIREARMS DESIGN BOOK, VOLUME III

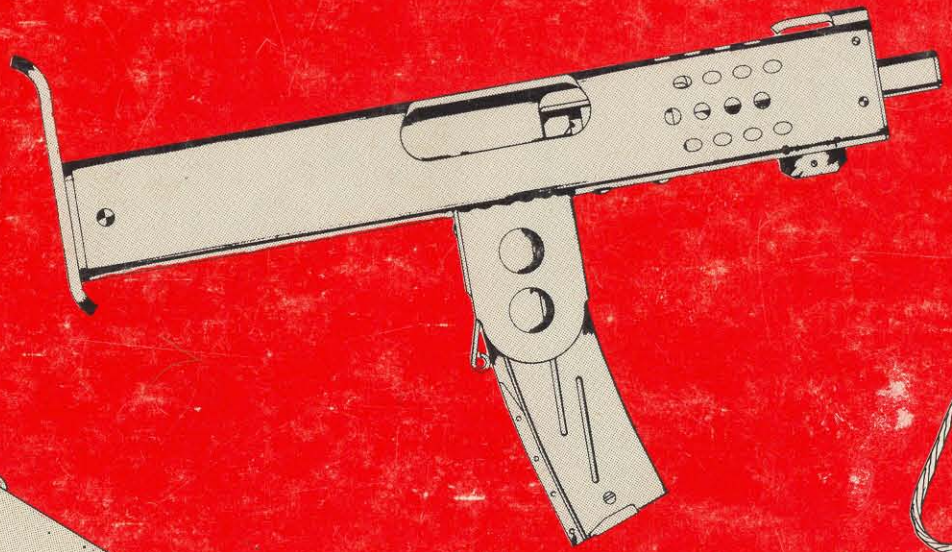

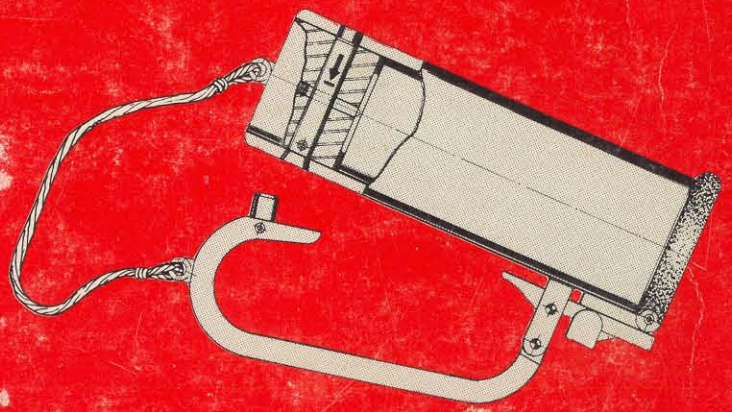

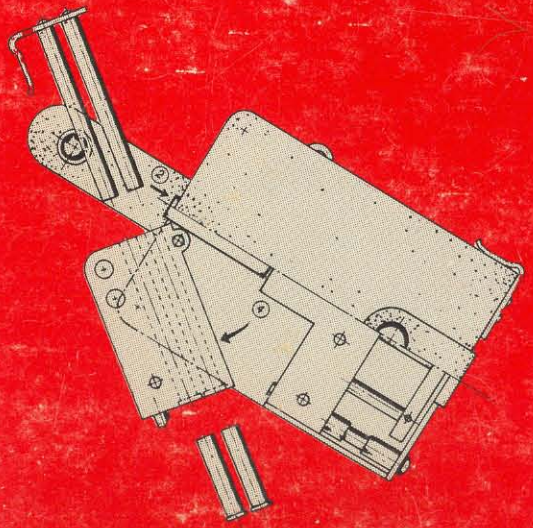

Published By
Paladin Press
Boulder, Colorado

WARNING

It is against the law to manufacture a firearm without an appropriate license from the federal government. There are also state and local laws prohibiting the possession of such weapons in many areas. Severe penalties are prescribed for violations of these laws. Be warned!

AUTOMATIC AND CONCEALABLE FIREARMS DESIGN BOOK, VOLUME III

Paladin Press
Boulder, Colorado

Paladin Press will not be responsible for the use or misuse of any information contained in this book. It is intended for historical and reference purposes only.

Automatic and Concealable Firearms Design Book, Volume III
Copyright 1982 by Paladin Press

All rights reserved. No portion of this book may be reproduced in any form without express written permission from the publisher.

ISBN 0-87364-224-4

Printed in the United States of America

WARNING

It is against the law to manufacture a restricted or prohibited firearm without an appropriate license from the federal government. There are also state and local laws prohibiting the possession of such devices in many areas. Severe penalties are prescribed for violations of these laws. Be warned!

CONTENTS

INTRODUCTION 1
WALLET GUN 3
XM-30 MACHINE PISTOL 9
BROWNING HI-POWER MACHINE PISTOL CONVERSION 21
.45 BULPUP SILENCED PISTOL 29
FUTURE ASSAULT SHOTGUN 41
TRIAD PROTECTION SYSTEM 49

WALLET GUN

SPECIFICATIONS:

CATEGORY ..... IMPROVISED-HANDMADE
CALIBER ..... 22 RIMFIRE
CAPACITY ..... TWO SHOTS

REMARKS: *THE SYSTEM, AS THE NAME IMPLIES, IS DESIGNED TO COUNTER A HOLDUP SITUATION THROUGH USE OF A GUN DISGUISED AS AN ORDINARY-LOOKING WALLET. THE WEAPON CAN BE MADE IN VARIOUS CALIBERS, BUT .22 RIMFIRE AMMUNITION WILL MORE EASILY ACHIEVE THE FLATNESS REQUIRED TO MAKE IT LOOK LIKE A MAN'S LEATHER WALLET. THE GUN FIRES BOTH CARTRIDGES AT THE SAME TIME FOR MAXIMUM STOPPING POWER AT CLOSE RANGES.*

SYSTEM OF OPERATION:

Model 1 is a hammer-type gun fired via double action by pressing the thumb-operated lever. The thumb lever in this particular model can be folded forward flush to frame level when not in use. In emergency situations, like holdups or robberies, simply pull the lever with your thumb to a vertical firing position while pulling your "wallet" out of your pocket and pretending to give it to your assailant. Since the robber will not be aware of the weapon inside, he will be caught in the instant of surprise, and will easily be outgunned. It will be too late for him to know what hit him.

The model 2 antiholdup wallet gun is more adaptable and more easily put into instant action than model 1. The manual extractor will also enhance its versatility as a survival-type weapon if reloading will be needed. In preparation for instant use, push the front end of the striker spring rod until it engages with the sear. Then pull the front flap of the leather around the front end of the striker rod and frame cover. This will act as your safety. The leather flap will prevent the forward motion of the striker spring guide.

your pocket and flick off the snap catch of the leather flap with your thumb. This will clear the leather strap from in front of the striker rod, readying it for firing. By pressing the protrusion of sear on top of the frame, the weapon will fire both cartridges. Refer to diagrams for complete details on manual operation and extraction of empty shells.

This weapon offers several applications for self-defense and personal protection. Besides being used as a wallet gun, it can be built into the side pocket of a woman's handbag as protection against muggers and rapists.

It can also be made to fit into the logbook that police officers carry to give them a last-ditch weapon that could save their lives in extreme situations. It can also be disguised as a cigarette box.

Think of a disguise for the antiholdup gun that will fit into your lifestyle. You may find that this weapon will not only save your cash, but may also save your life in time of need.

PARTS LIST: MODEL 1

1. *Frame—formed from 1/16-inch-thick steel*
2. *Thumb-operated lever for firing*
3. *Snap catch*
4. *Frame cover—1/16-inch steel secured to frame by two screws*
5. *Index bolt*
6. *Spring*
7. *Trip lever arm*
8. *Trip plunger spring*
9. *Trip plunger*
10. *Trip lever arm pivot pin—permanently brazed to frame*
11. *Trip lever arm spring*
12. *Trip lever arm spring base pin—permanently brazed to frame*
13. *Frame cover screw base rods—thread holes for two screws, permanently brazed to frame*
14. *Frame cover screw—front*
15. *Barrel axis pin—permanently brazed to frame*
16. *Trip pin*
17. *Trip*
18. *Thin, soft leather laminated to external surfaces of the frame*
19. *Frame cover screw—rear*
20. *Hammer*
21. *Hammer spring*
22. *Barrel—.22 magnum rimfire. Counterbore chambers to seat rim of cartridges.*
23. *Barrel lock bolt spring*
24. *Barrel lock bolt stop pin*
25. *Breech lock*
26. *Barrel lock bolt*
27. *Firing pin*
28. *Breechblock pins*
29. *Hammer pivot pin*
30. *Push-button release for barrel lock bolt*

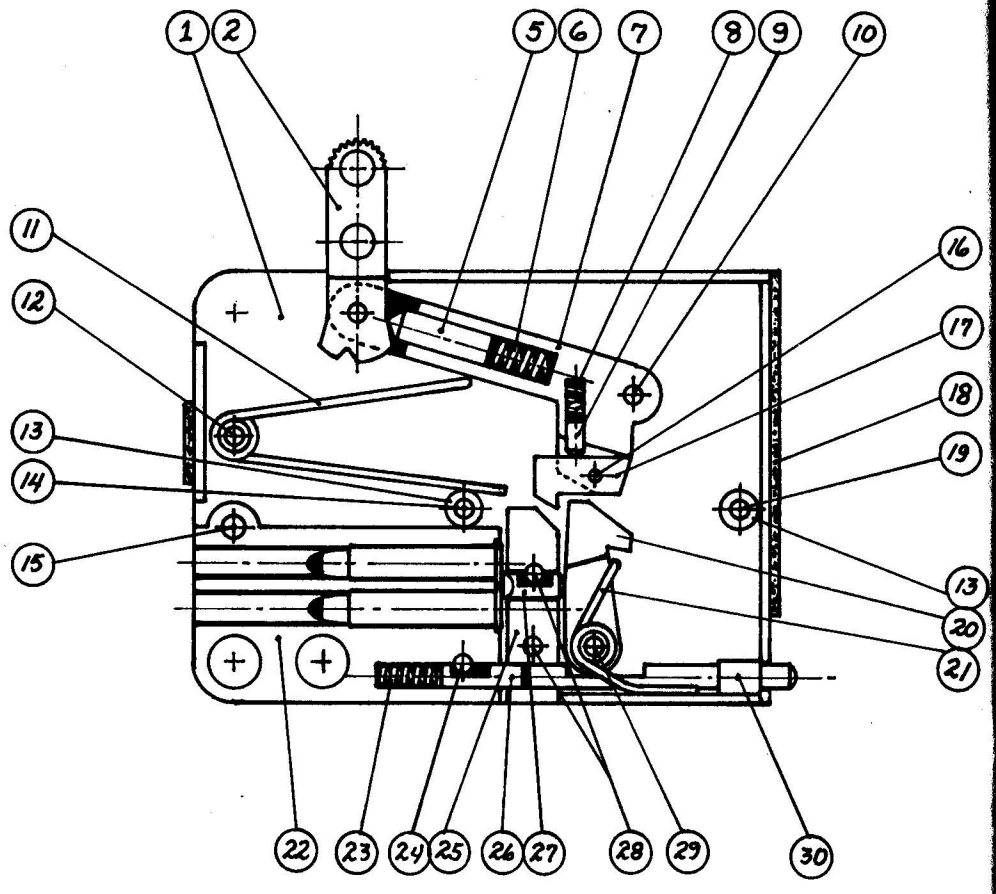

NOTE: DRAWING ON THIS PAGE 3/4 SCALE. ALL OTHER WALLET GUN DRAWINGS ARE FULL SCALE.

Copyright 1982 by Paladin Press

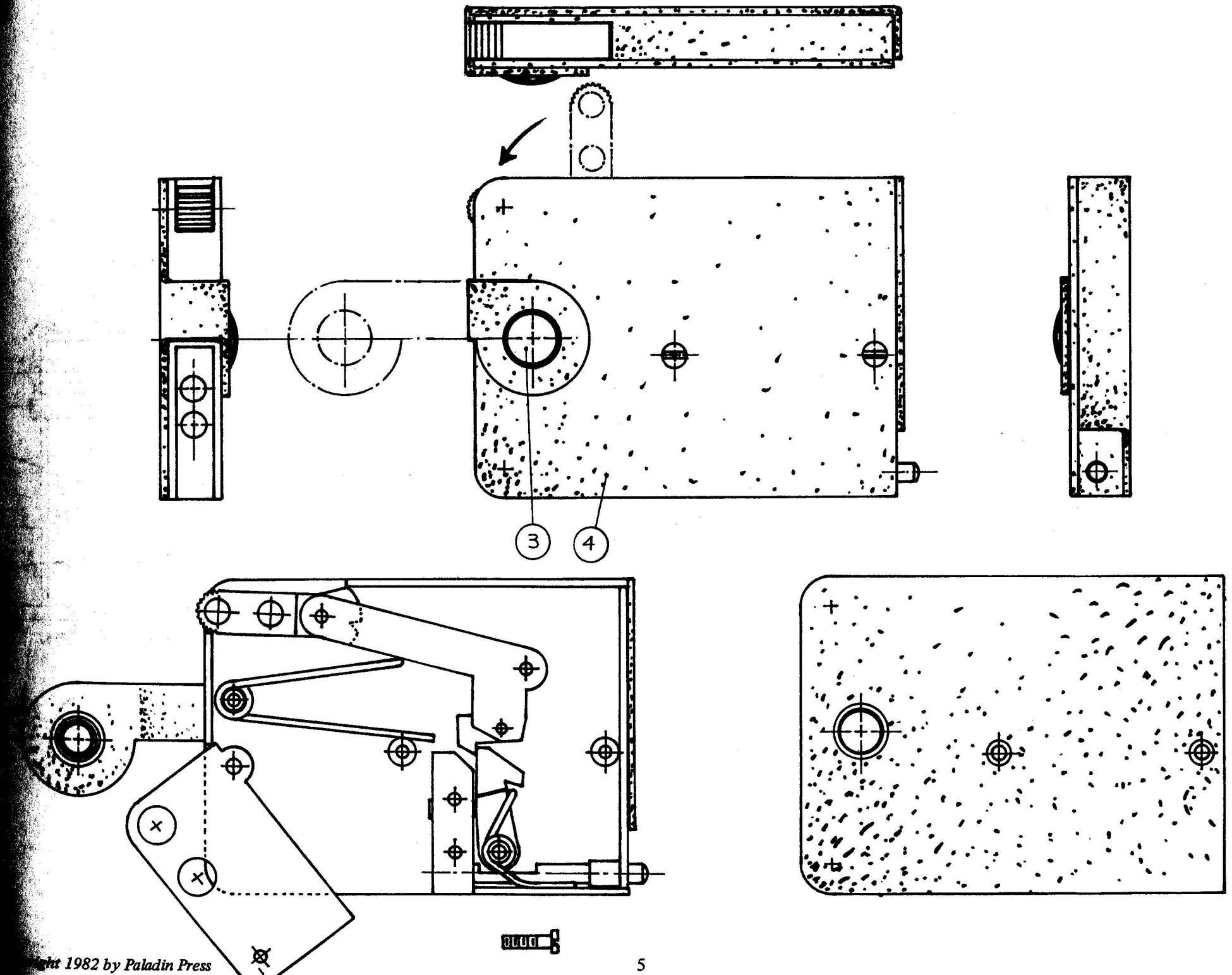

ght 1982 by Paladin Press

PARTS LIST: MODEL 2

1. *Sear*
2. *Sear axis pin—permanently brazed to frame*
3. *Sear spring*
4. *Striker spring—cut from M1 carbine recoil spring of similar coil-type hammer spring*
5. *Striker spring guide*
6. *Extractor—dual prong type (same diagram as cartridge case)*
7. *Extractor base—flat spring clip pressing against top surface of frame to prevent extractor unit from falling off the housing frame.*
8. *Frame cover screws—two positions*
9. *Breechblock—aluminum plate preferred for lightness*
10. *Firing pin base plate*
11. *Frame body—1/16-inch steel sheet formed like box compartment*
12. *Barrel axis pin—permanently brazed to frame*
13. *Barrel*
14. *Barrel lock bolt spring*
15. *Lock bolt stop pin*
16. *Lock bolt—drill rod hardened*
17. *Push button lock bolt release stop pin*
18. *Firing pin*
19. *Securing pin for firing pin*
20. *Push button lock bolt release*
21. *Leather flaps snap catch*
22. *Paper money clip rivets—to be riveted outside frame body*
23. *Paper money clip*
24. *Ultra-thin soft leather*
25. *Frame cover—1/16-inch steel sheet laminated with ultra-thin soft leather*

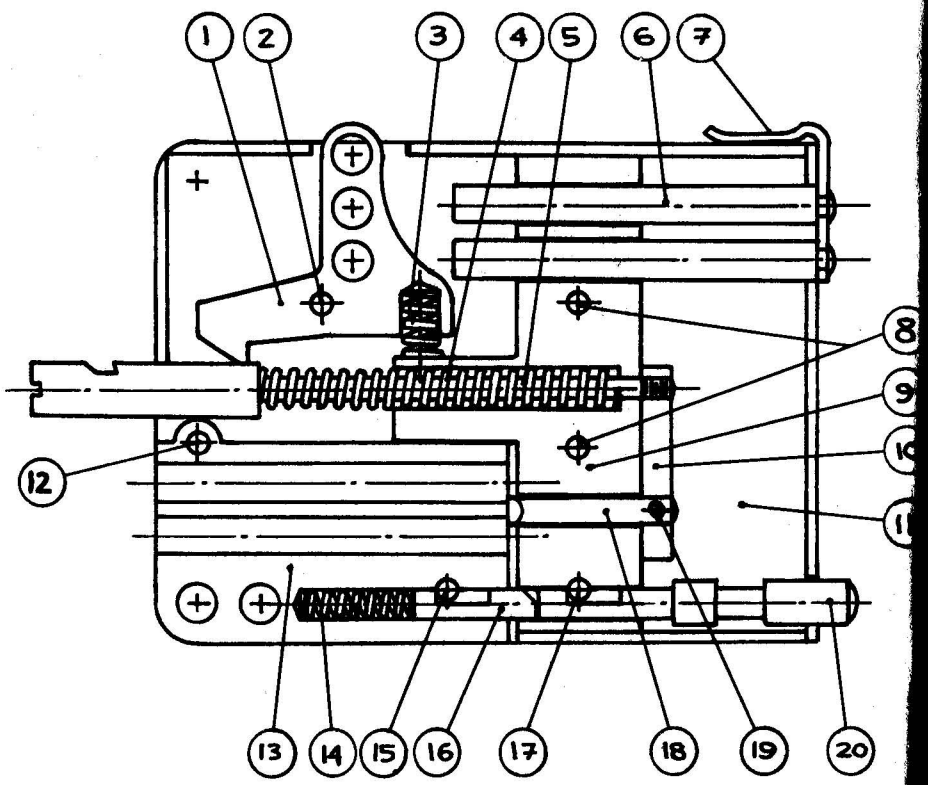

Copyright 1982 by Paladin Press

XM-30 MACHINE PISTOL

SPECIFICATIONS:

CATEGORY	IMPROVISED-HANDMADE
CALIBER	30
CAPACITY	15- OR 30-ROUND
OPERATION	AUTOMATIC

REMARKS: *THE XM-30 MACHINE PISTOL IS DESIGNED TO BE A VERY COMPACT, FAST-FIRING, CLOSE-QUARTERS WEAPON UTILIZING THE MORE POWERFUL M1 CARBINE .30-CALIBER CARTRIDGE FOR HIGHER VELOCITY AND PENETRATION.*

SYSTEM OF OPERATION:

The XM-30 machine pistol operates on the hesitation blowback principle using a bolt-retarding mechanism to slow down its breech opening. The retarder is necessary since the gun utilizes a more powerful cartridge than the pistol-type ammunition commonly employed in most submachine guns and automatic pistols.

When utilizing low-powered ammunition such as 45 ACP, 9mm, .380, etc. in this system or configuration, the retarder is not necessary since pistol-type ammunition will function safely on the blowback principle using a heavy bolt.

The basic configuration of the XM-30 is advantageous. The grip is placed exactly at its center of gravity and the butt plate line has a dual position index. The upper index position places the bore axis of the barrel well below it, completely eliminating muzzle climb in a full automatic. The butt plate can also be indexed to a lower-than-normal position if the shooter so desires.

The trigger mechanism has been kept to utmost simplicity: the sear doubles as the trigger and is operated by the thumb of the hand grasping the front portion of the receiver in a normal manner while the other hand grasps the grip which contains the magazine.

Both the 30-round and the 15-round clip of M1 carbines can be utilized. The side lug on the left side of the 30-round clip must be filed off so the magazine can be inserted freely into the magazine housing.

The weapon does not have a sight. Since it is designed as a spray-type weapon for close quarters, a sight is not necessary. However, a high-type sight similar to that used on the M16 rifle is adaptable.

Most of the components required to build this weapon are from the M1 carbine itself and are readily available from mail-order suppliers.

NOTE ON COCKING THE WEAPON BEFORE FIRING:

To cock the bolt, insert your finger at the front end of the ejection port. Pull the front shoulder of the bolt carrier to the rear until the sear engages with it, and hold the bolt assembly on the open position ready to fire. If the weapon is not to be fired, apply the safety to prevent the sear from accidentally releasing the bolt carrier, thus firing the weapon unintentionally.

IMPORTANT:

Some difficulty might be encountered in cocking the weapon due to the retarder hooking with the receiver tubing. Before pulling the bolt to cock it, simply push up the retarder with your finger, not cocking the weapon, while the butt plate is resting against your waist.

PARTS LIST:

1. *Butt plate—formed and shaped from 3/16-inch steel plate*
2. *Butt plate screw—hex-type head preferably flush with counterbore of the plate hole*
3. *Rear receiver block—some machining required*
4. *Receiver block retaining pin—hardened after cutting to dimension. It is retained and tightened by butt plate screw to prevent it from loosening during battery.*
5. *Recoil spring guides—two pairs—M1 carbine spring guides must be cut to length*
6. *Recoil springs—two pairs—standard size and length from M1 carbine*
7. *Receiver tubing—cut from seamless tubing*
8. *Barrel—bored, reamed, and rifled for M1 carbine cartridge. It is best to order barrel ready-made from a supplier.*
9. *Barrel-support base—some machining and threading needed*
10. *Push thumb-operated trigger—formed and cut from 1/8-inch steel sheet. It must be hardened after final cutting and polishing.*
11. *Sear/trigger spring—can be cut and improvised from M1 carbine ejector spring*
12. *Butt plate index plunger stop pin—made from drill rod material*
13. *Butt plate index plunger*
14. *Butt plate index plunger spring—cut from M1 carbine recoil spring*
15. *Retarder pin—cut from drill rod hardened after cutting*
16. *Firing pin protrusion control pin—hex slot headless type to be tightened by Allen wrench*
17. *Bolt—round-type M2 carbine complete with firing pin, extractor, and ejector assembly. Note that locking lugs are nonfunctional. Bolt must be fully assembled before mating it with the bolt carrier. If possible, bolt must be press-fitted to center hole of carrier and pinned with hardened roll pin.*
18. *Bolt retaining pin—roll pin preferred. If roll pin is unavailable, use drill rod of slightly larger diameter than the pin hole and peen both ends to prevent loosening.*
19. *Magazine catch screw*
20. *Magazine catch—form and file soft spring to flat shape before rehardening*
21. *Magazine housing—formed, cut, and shaped from 1/8-inch steel sheet. After final forming and cutting, spot-weld housing to receiver.*
22. *M2 carbine 30-round clip—file off the side lug mating with the side catch of M2 catch so that magazine may be inserted freely into the housing. The 15-round clip need not be modified.*
23. *Barrel-support base screws—two sets—hardened*
24. *Sear nose*
25. *Index balls—two pair—1/8-inch-diameter steel balls*
26. *Index ball spring—M1 carbine extractor spring adaptable*
27. *Safety block*
28. *Safety block connecting pin*
29. *Front barrel base support*
30. *Sear/trigger pin—pin must be peened on both ends to prevent loosening during assembly*
31. *Sear stop pin*
32. *Safety lever*
33. *Bolt carrier—machining required*
34. *Retarder lever—hardened after cutting and polishing*
35. *Retarder spring—cut from M1 carbine recoil spring*

Note: Bolt retarder mechanism is not necessary when using pistol-type ammunition such as the 45 ACP, 9mm Parabellum cartridge, .380, etc.

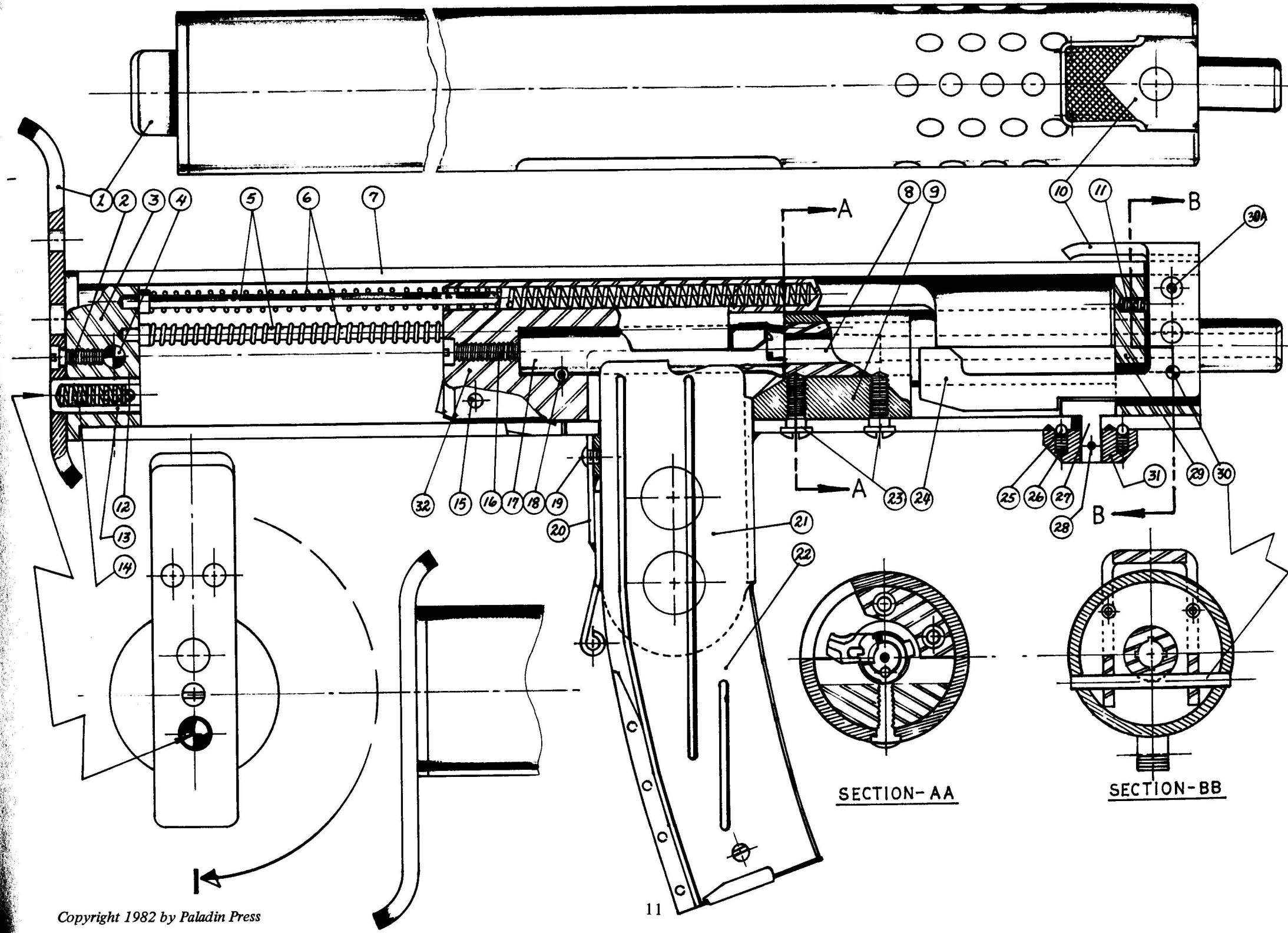

Copyright 1982 by Paladin Press

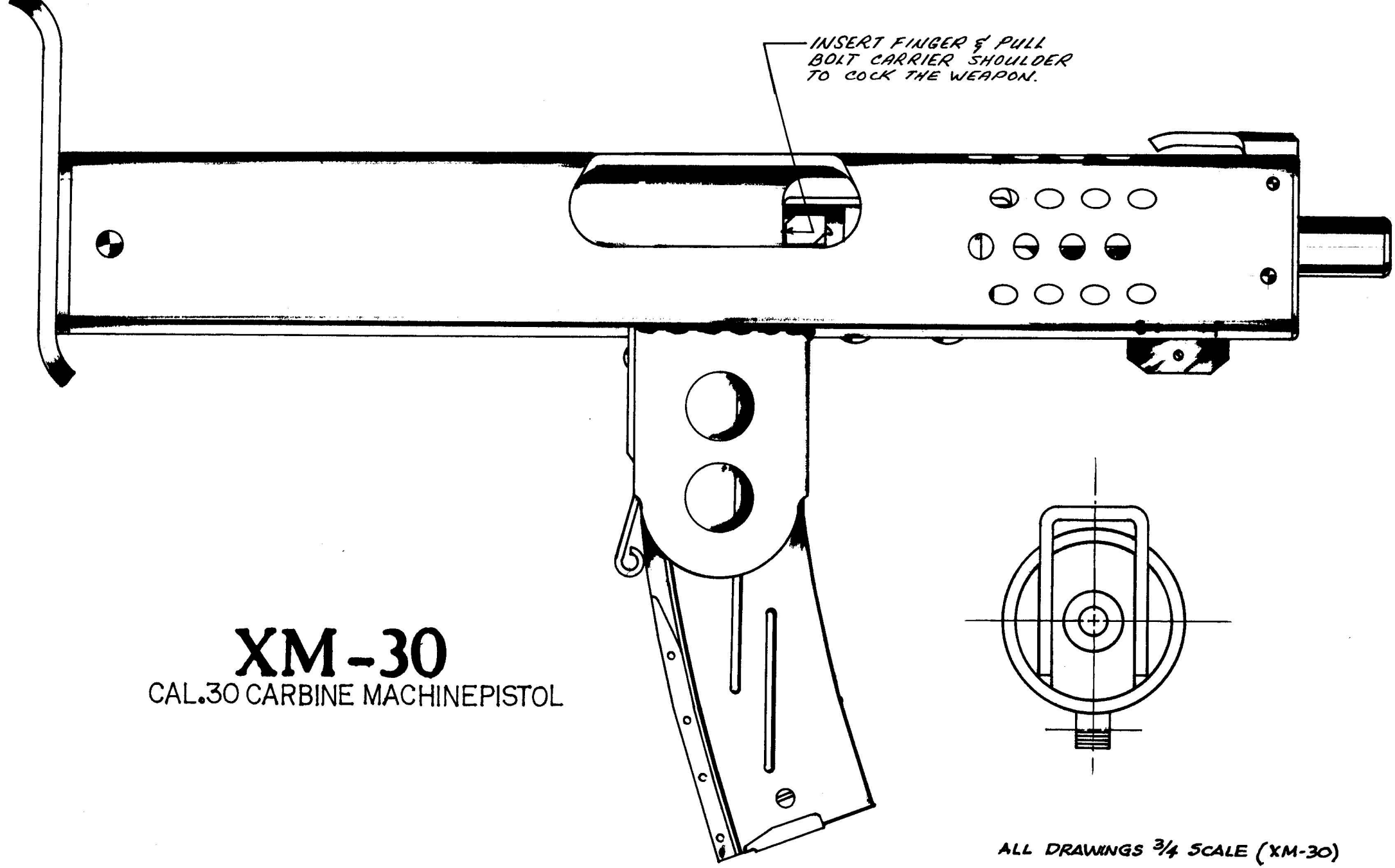

Copyright 1982 by Paladin Press

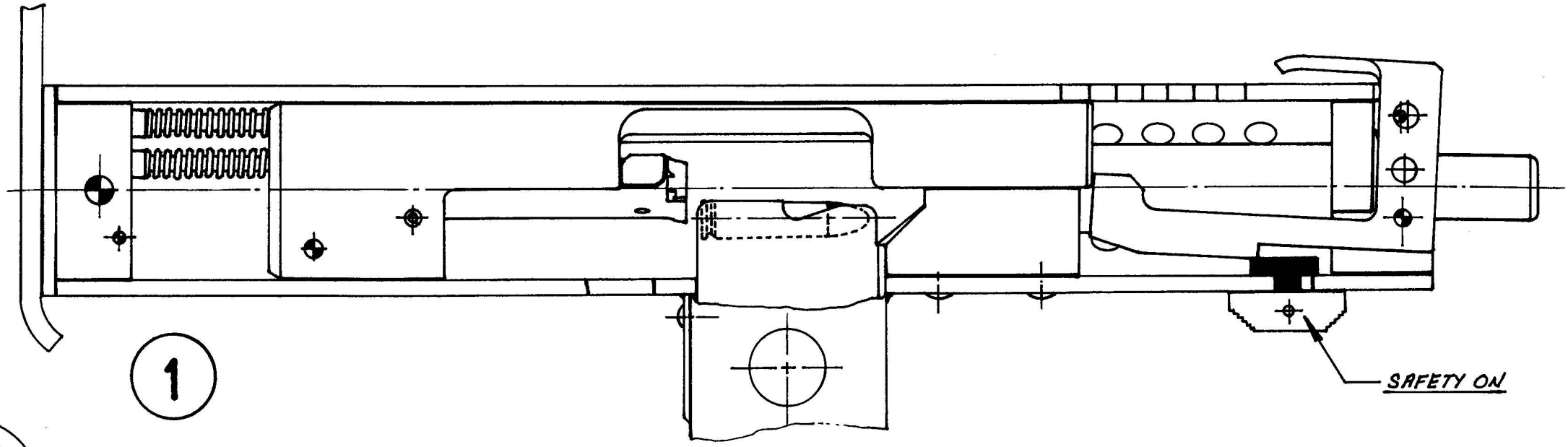

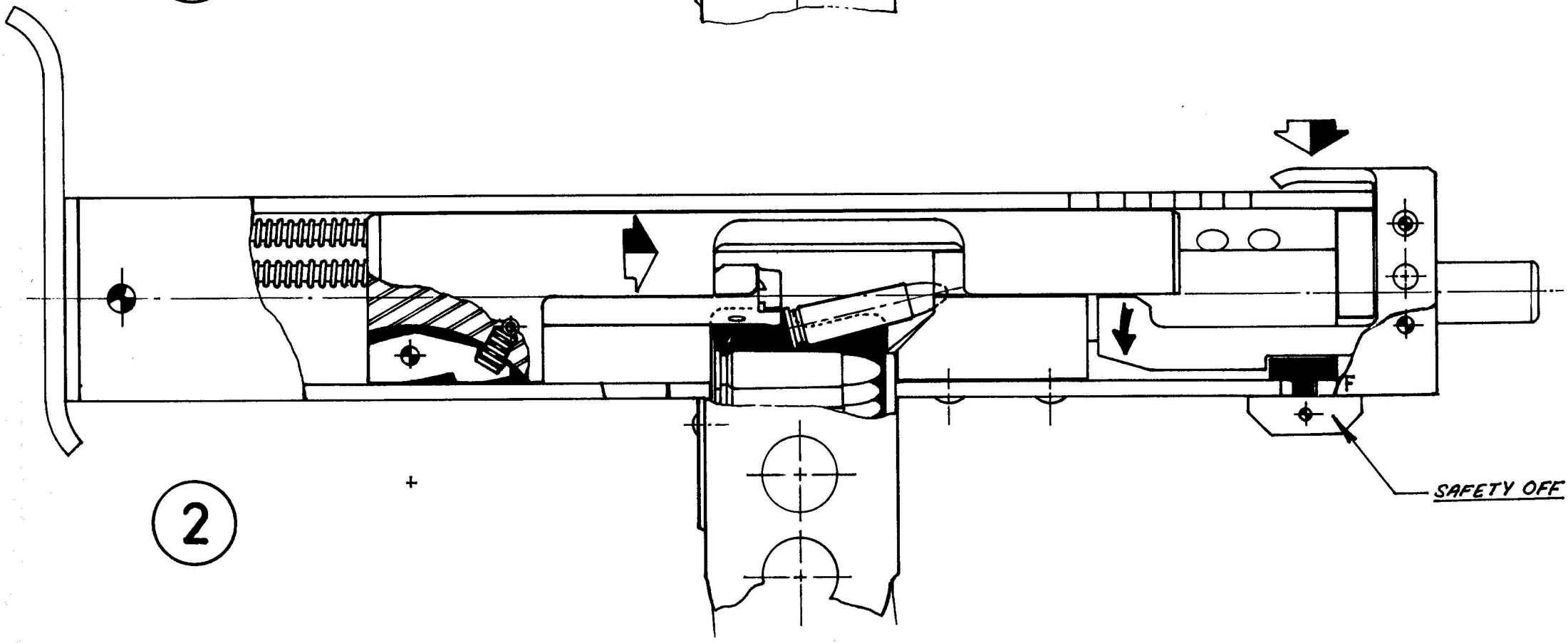

Copyright 1982 by Paladin Press

FIRING PIN PROTRUSION ADJUSTMENT SCREW.

FIXED FIRING PIN

S ← → F

33 34

WELD

3

15 SHOT CLIP

PRESS CARTRIDGE NOSE AGAINST BOLT LOCK TO DISENGAGE BUTT PLATE INDEX LOCKING. PLATE CAN NOW BE ROTATED TO LOWER POSITION AS DESIRED.

NOTE THE PROPER ASSEMBLY OF BOLT TO CARRIER FOR PROPER FEEDING & EXTRACTION

50°

RECOIL SPRINGS (M1.30 CARBINE).

EJECTION PORT

FIRING PIN-M1

BOLT CARRIER

EJECTOR-M1

EXTRACTOR-M1

BOLT BODY M2 "ROUND TYPE"

Copyright 1982 by Paladin Press

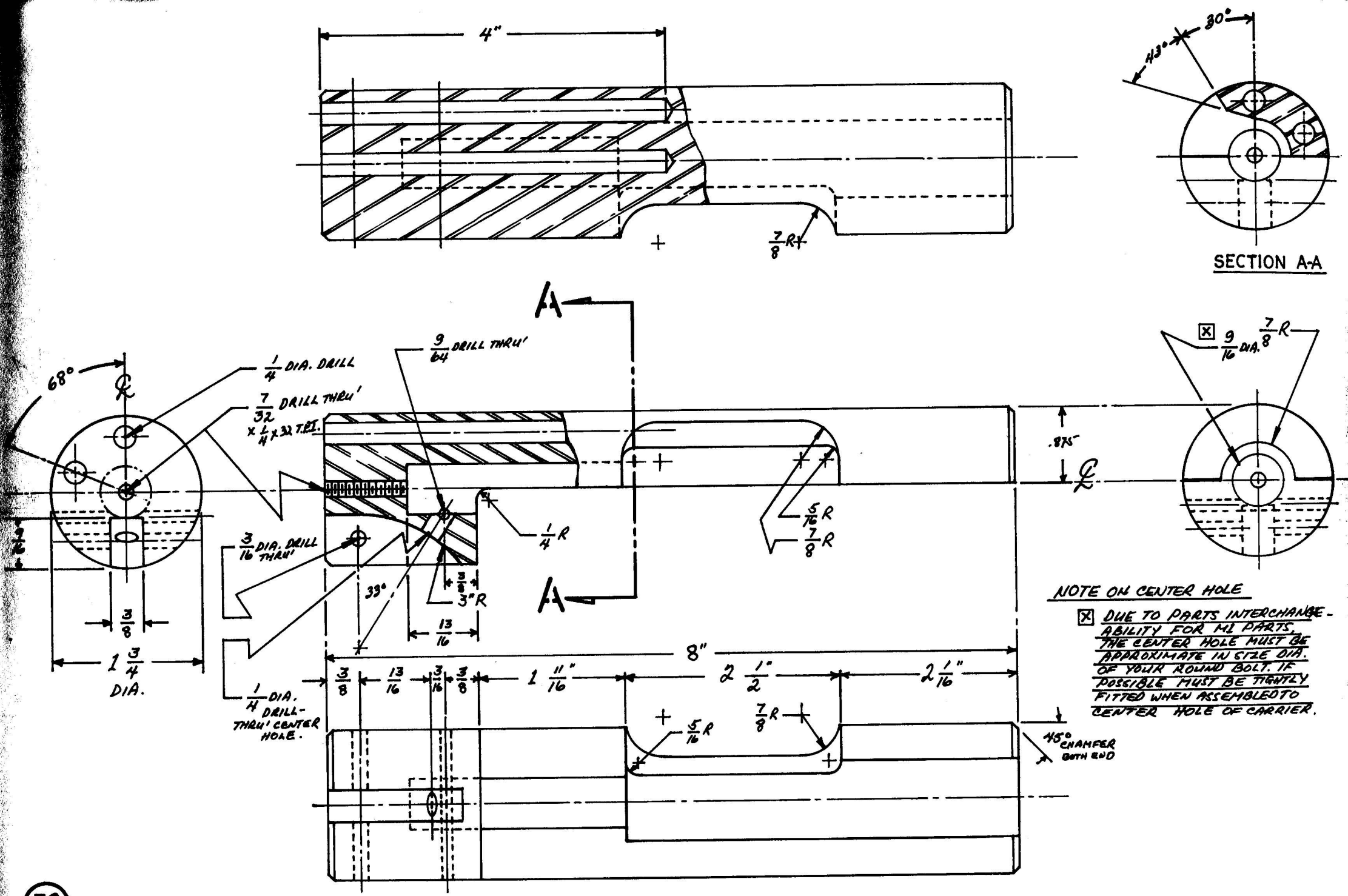

(32) BOLT CARRIER DETAIL

Copyright 1982 by Paladin Press

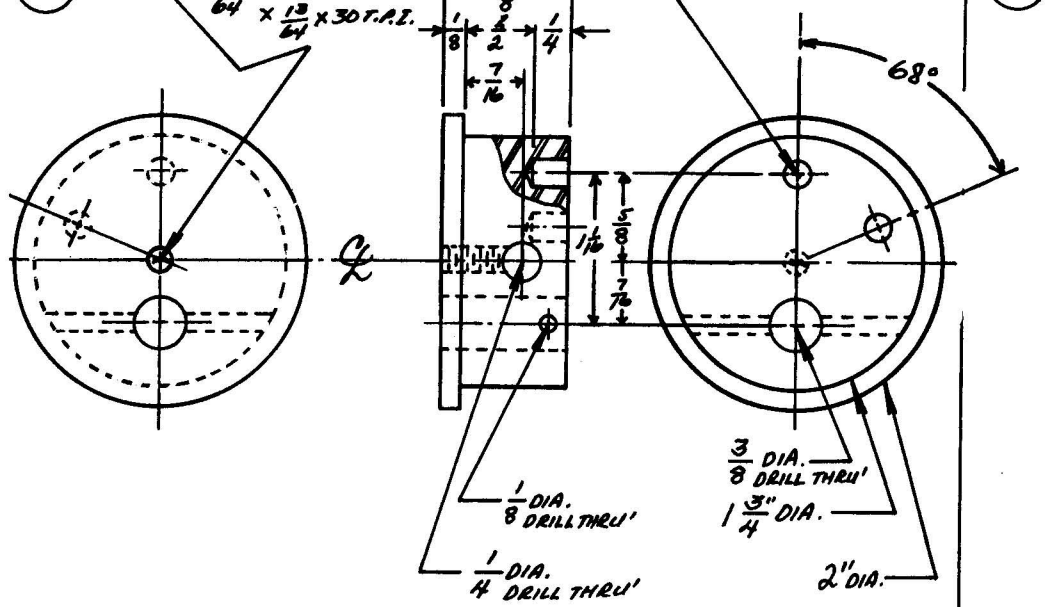

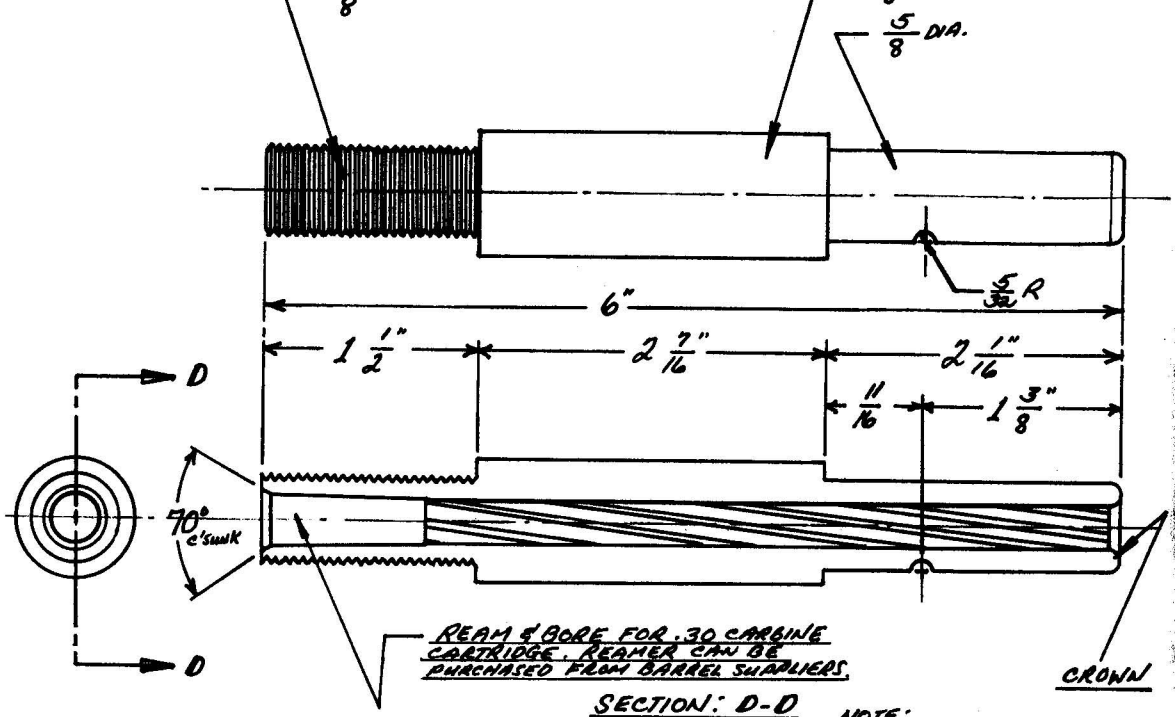

SECTION: D-D

NOTE: IF CUT DOWN M1 BARREL IS TO BE USED, REVISE DIMENSION.

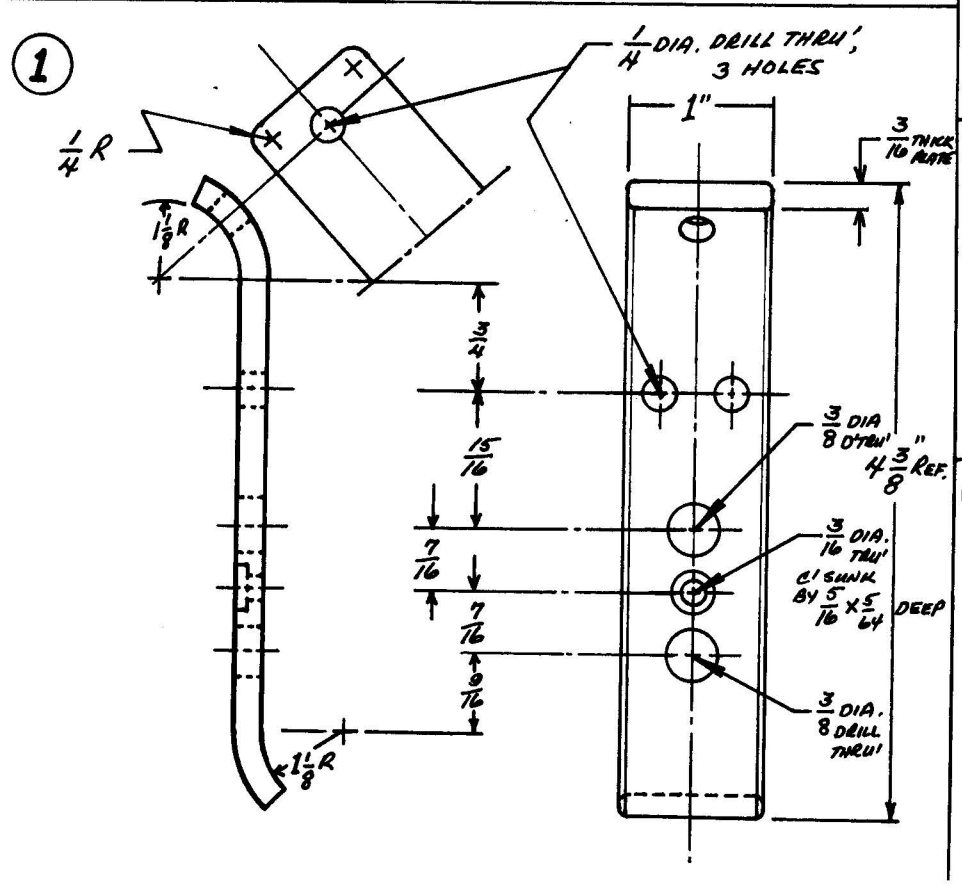

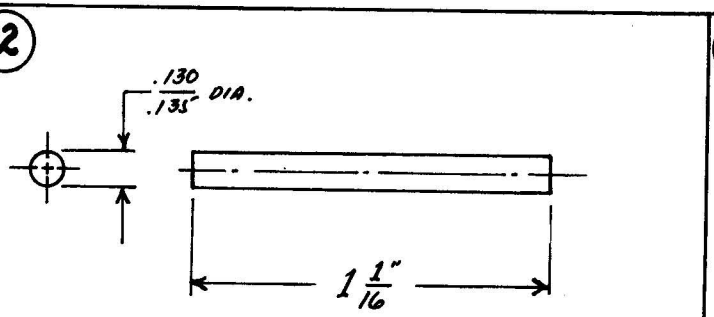

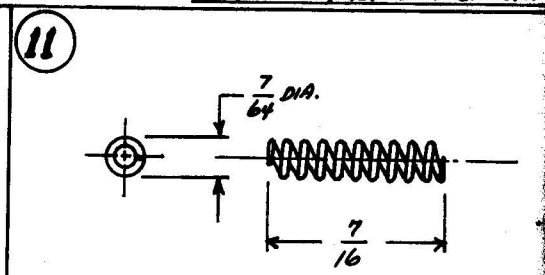

SPRING CAN BE CUT TO LENGHT FROM M1 CARBINE EJECTOR SPRING.

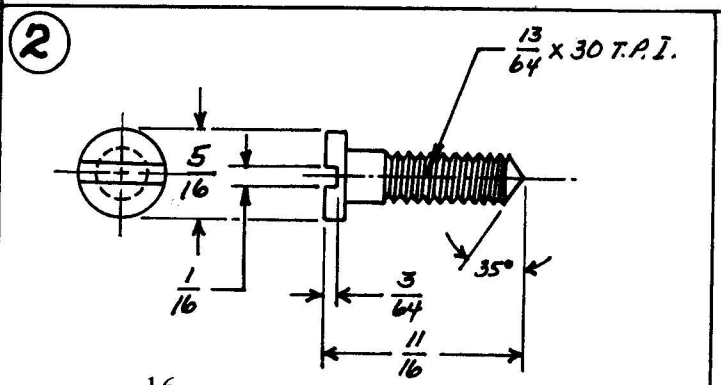

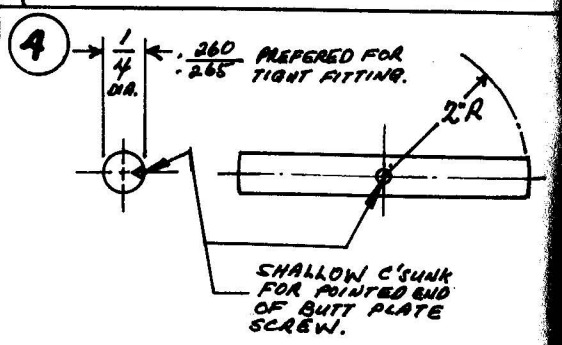

Copyright 1982 by Paladin Press

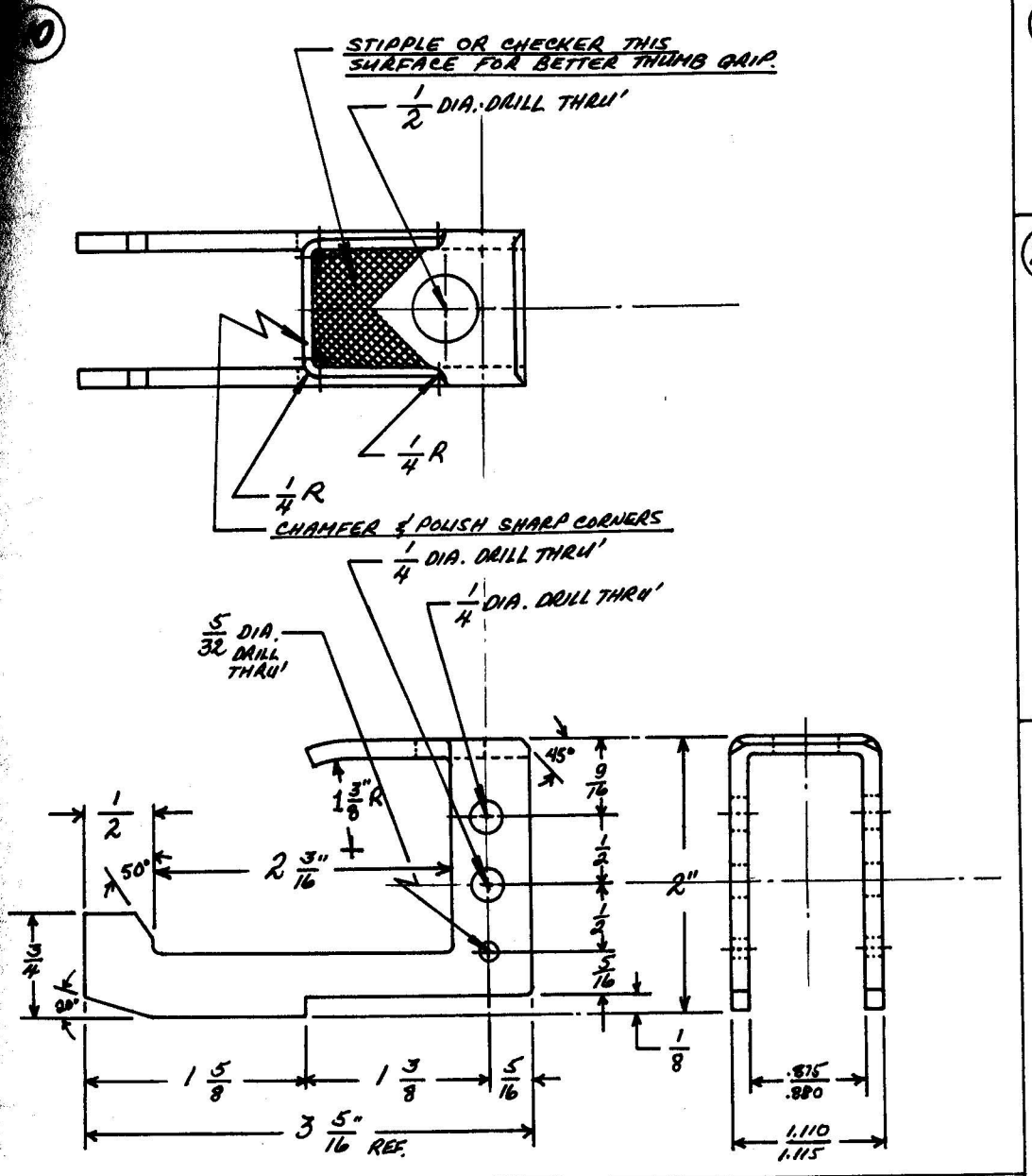
STIPPLE OR CHECKER THIS SURFACE FOR BETTER THUMB GRIP.
1/2 DIA. DRILL THRU'
1/4 R
1/4 R
CHAMFER & POLISH SHARP CORNERS
1/4 DIA. DRILL THRU'
1/4 DIA. DRILL THRU'
5/32 DIA. DRILL THRU'
1 3/8" R
45°
9/16
1/2
1/2
5/16
2"
1/2
50°
2 3/16"
3/4
90°
1/8
1 5/8
1 3/8
5/16
3 5/16" REF.
.875
.880
1.110
1.115

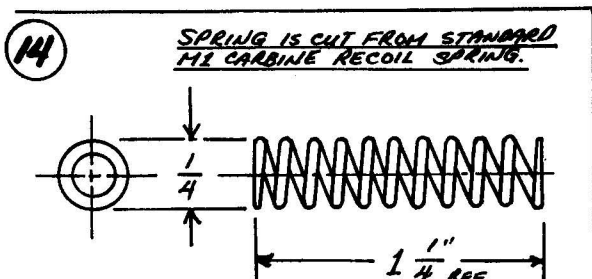
14
SPRING IS CUT FROM STANDARD M1 CARBINE RECOIL SPRING.
1/4
1 1/4" REF.

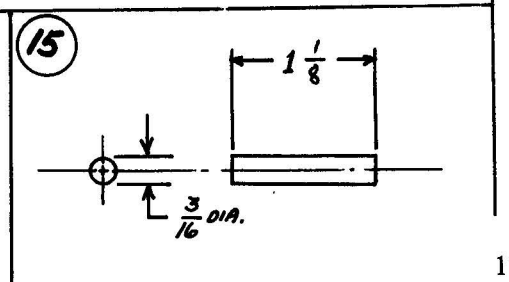
15
1 1/8
3/16 DIA.

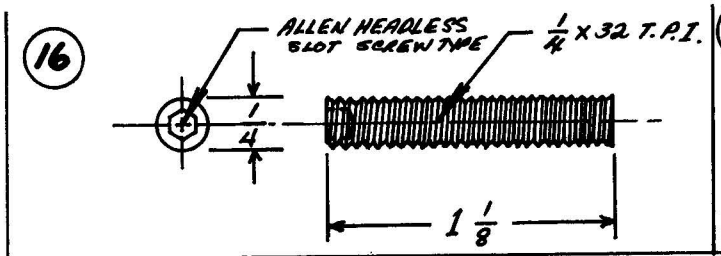
16
ALLEN HEADLESS SLOT SCREW TYPE
1/4 X 32 T.P.I.
1/4
1 1/8

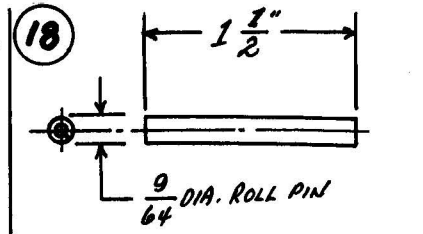
18
1 1/2"
9/64 DIA. ROLL PIN

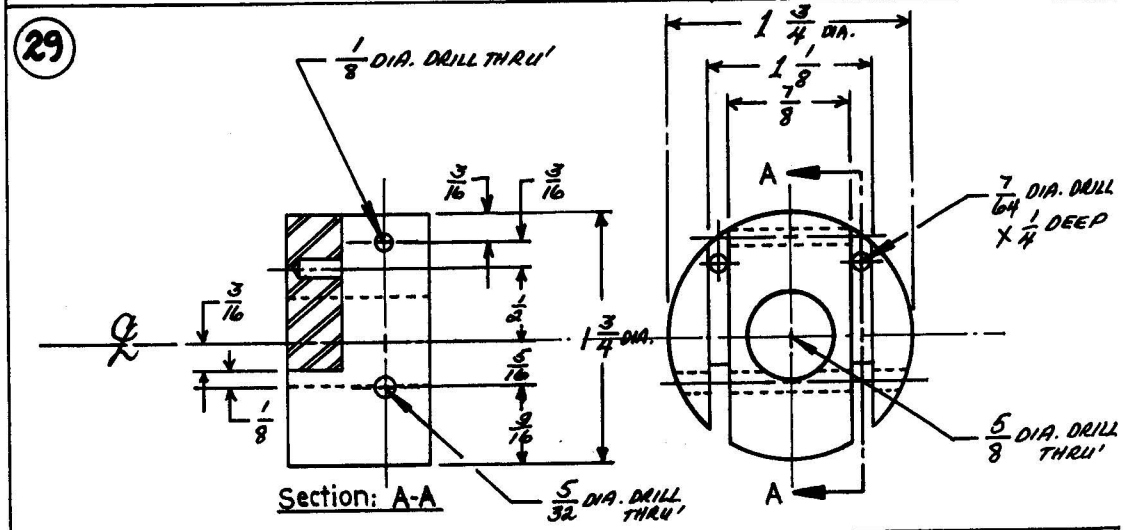
29
1/8 DIA. DRILL THRU'
3/16
3/16
3/16
1/2
5/16
9/16
1/8
1 3/4 DIA.
Section: A-A
5/32 DIA. DRILL THRU'
1 3/4 DIA.
1 1/8
7/8
A
A
7/64 DIA. DRILL X 1/4 DEEP
5/8 DIA. DRILL THRU'

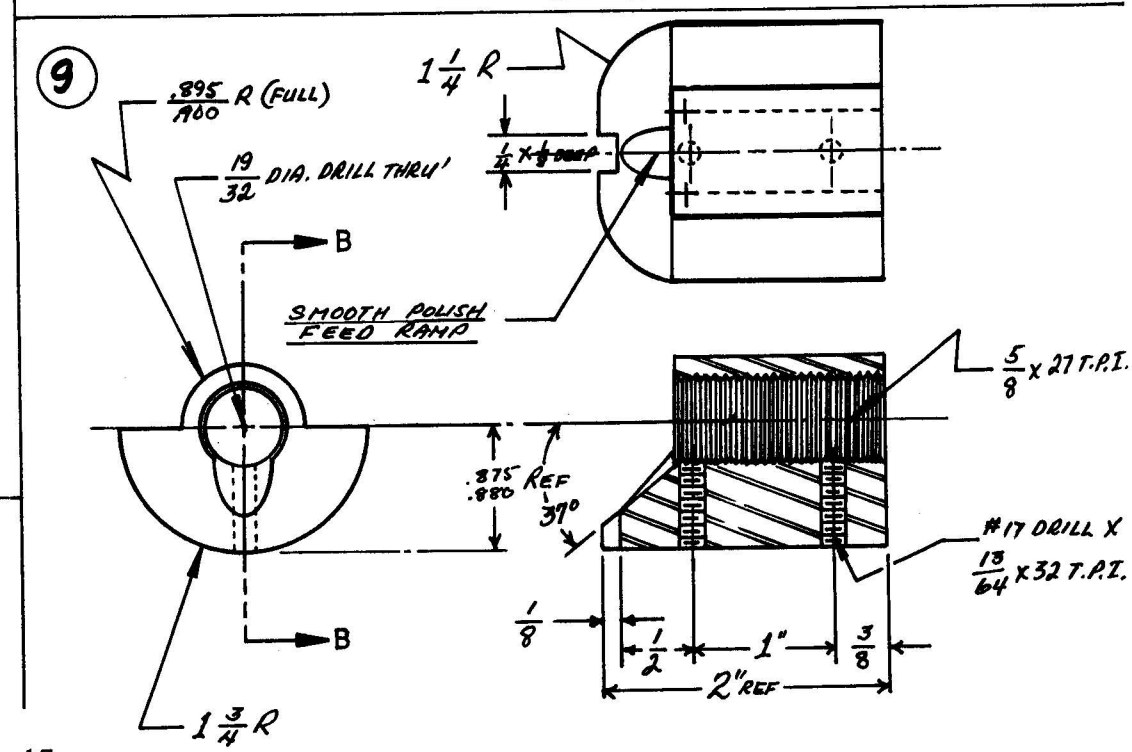
9
.895
.900 R (FULL)
19/32 DIA. DRILL THRU'
B
B
1 1/4 R
1/4 X 1/8 DEEP
SMOOTH POLISH FEED RAMP
5/8 X 27 T.P.I.
.875
.880 REF
39°
#17 DRILL X 13/64 X 32 T.P.I.
1/8
1/2
1"
3/8
2" REF
1 3/4 R

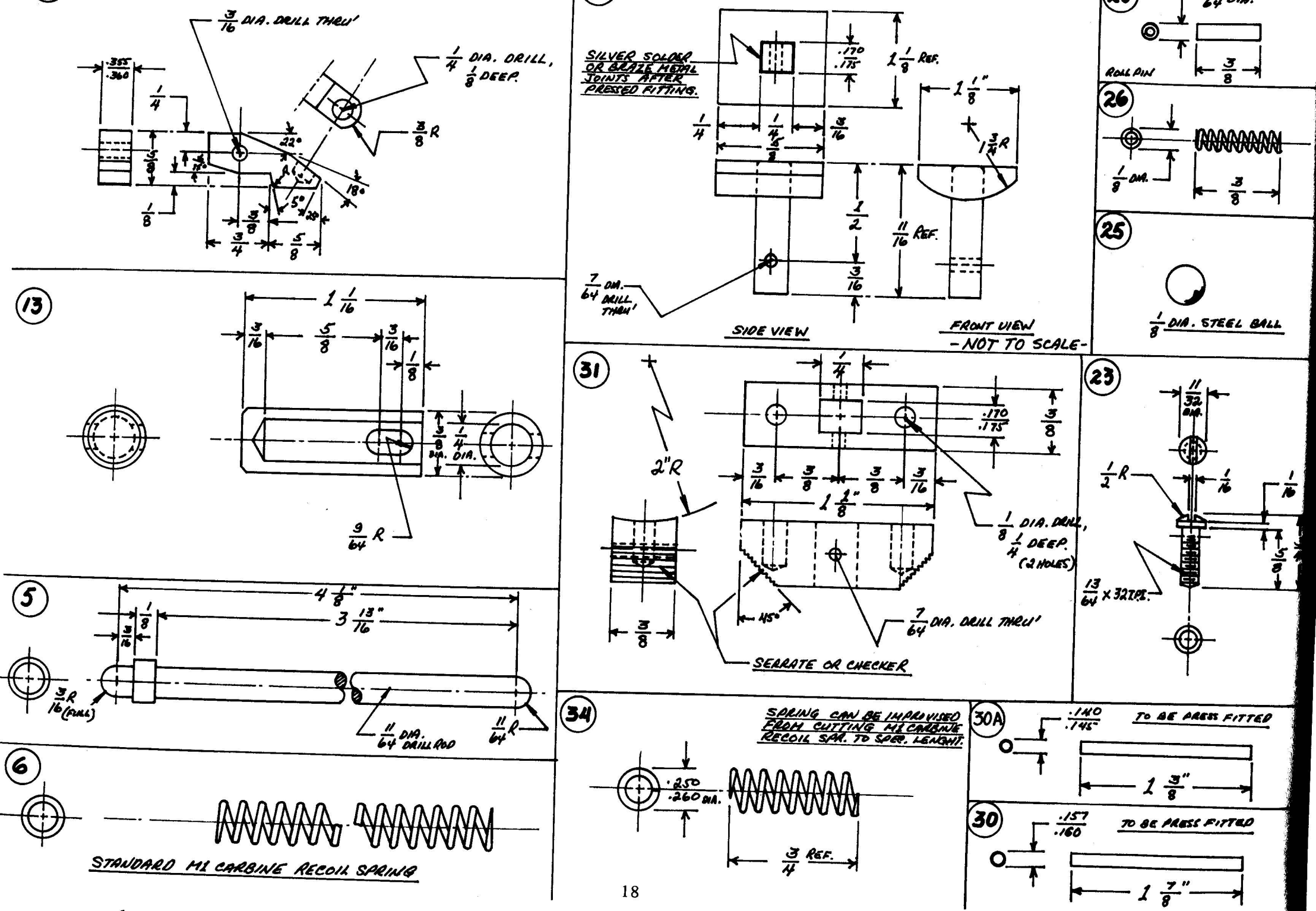

Copyright 1982 by Paladin Press

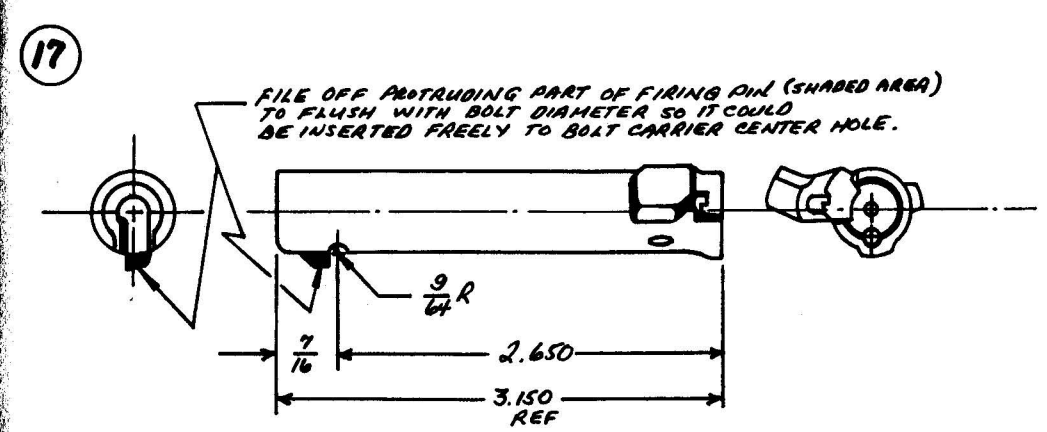

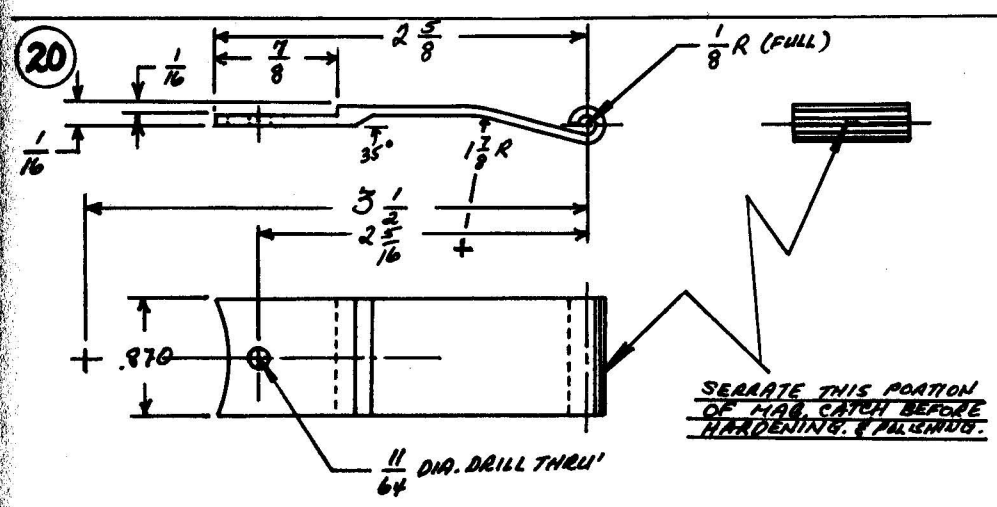

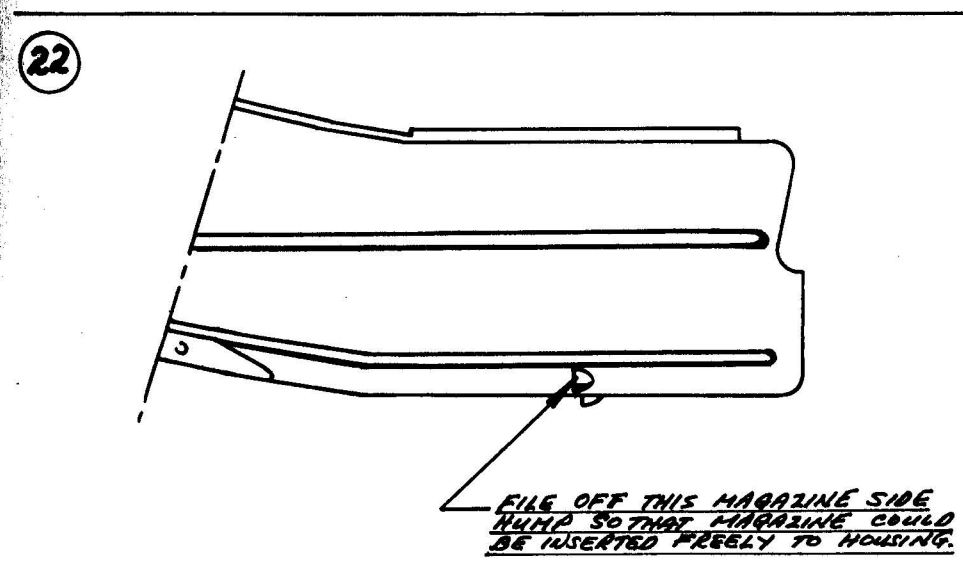

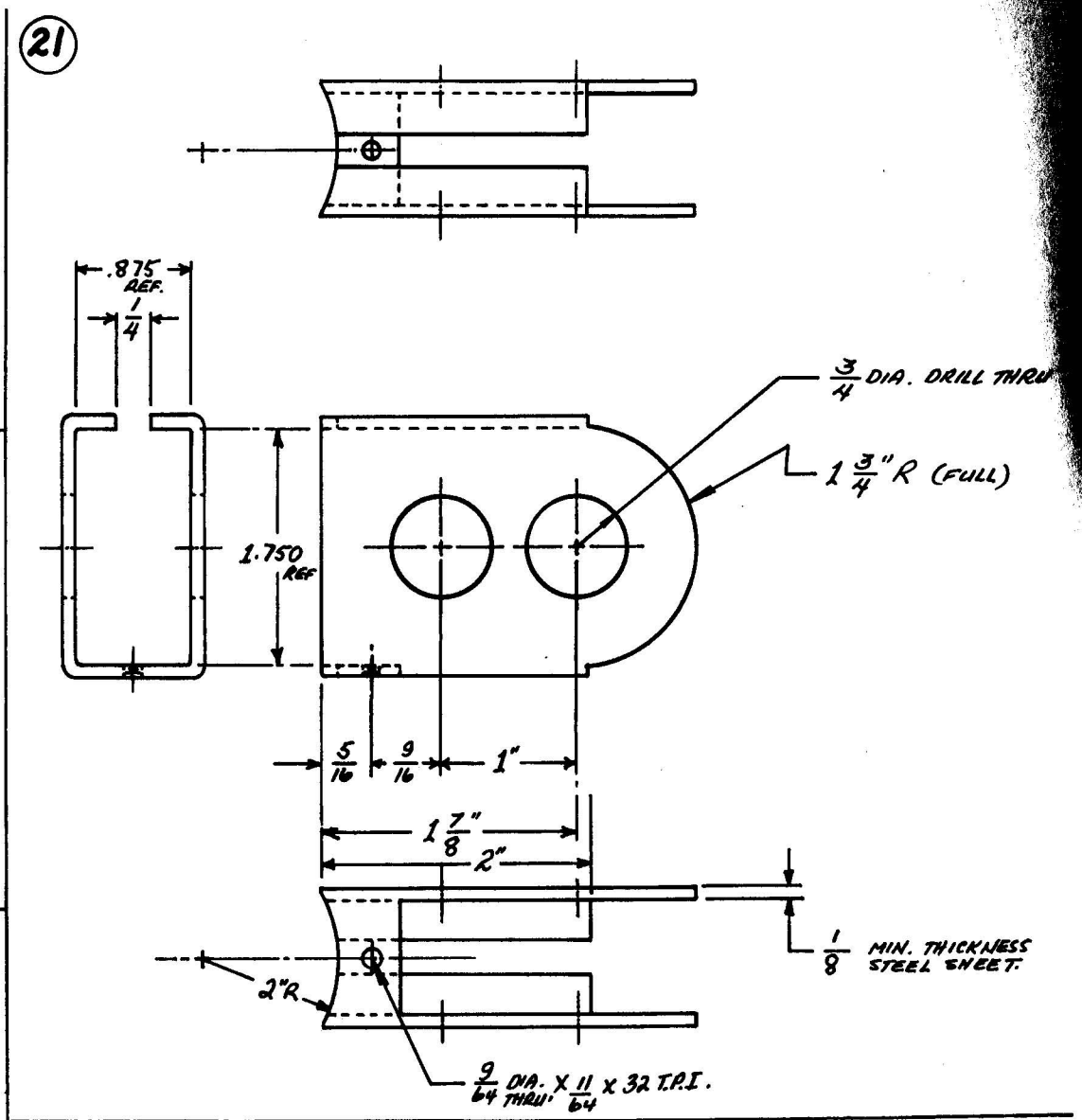

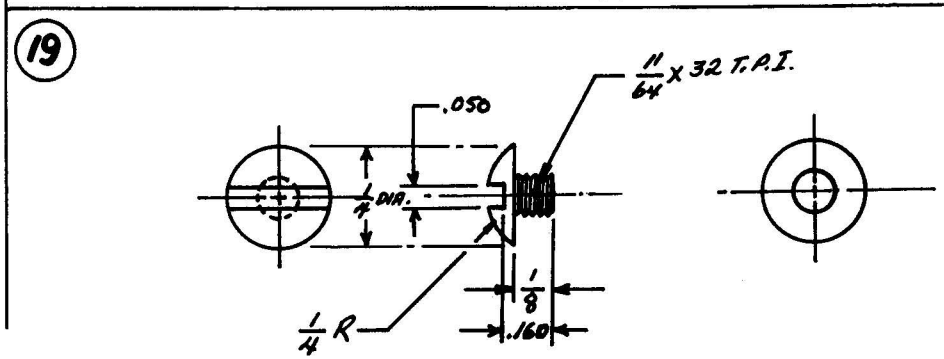

Copyright 1982 by Paladin Press

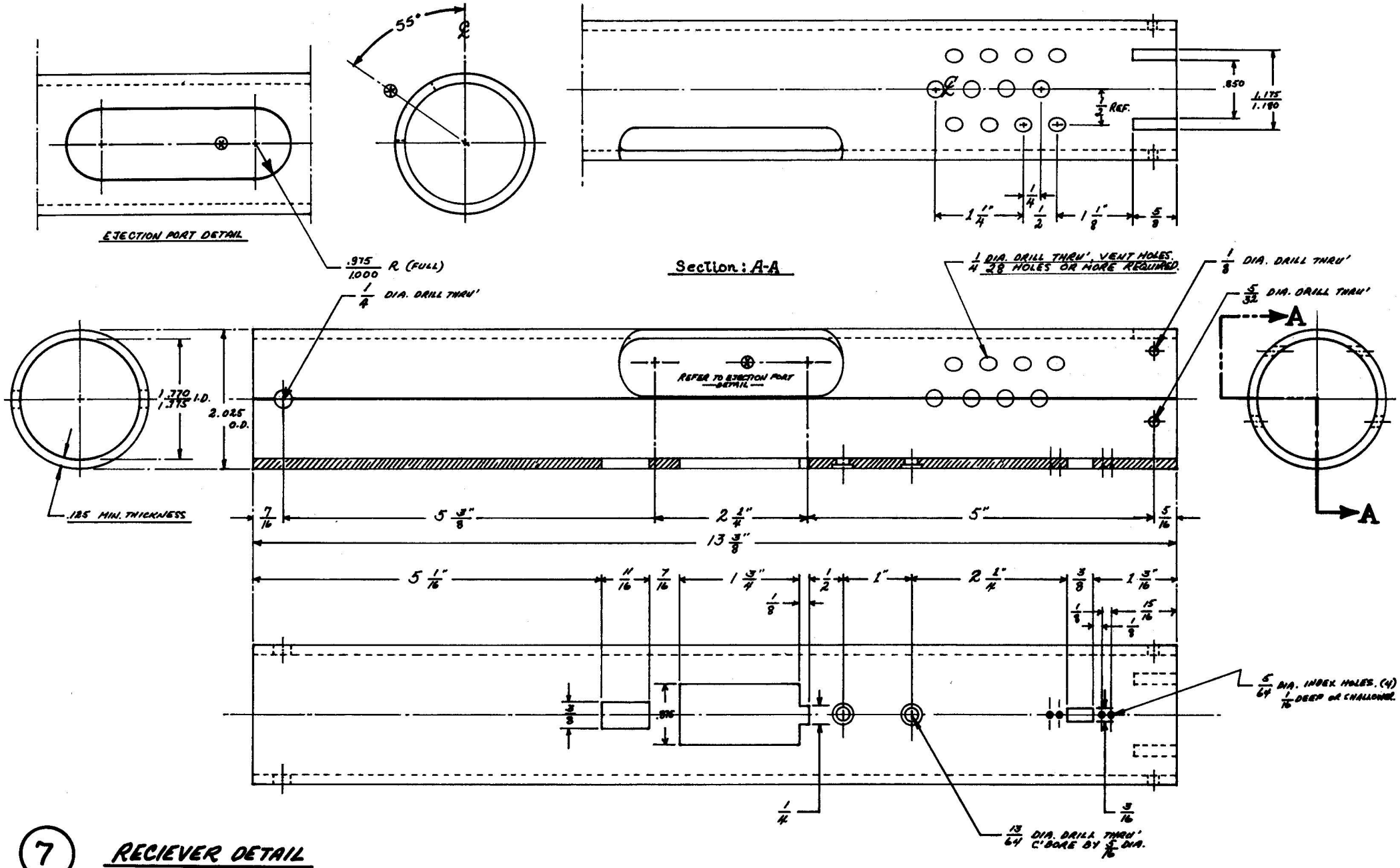

7 RECIEVER DETAIL

Copyright 1982 by Paladin Press

BROWNING HI-POWER MACHINE PISTOL CONVERSION

SPECIFICATIONS:

CATEGORY .... COMMERCIALLY MANUFACTURED
CALIBER ..... 9 MM PARABELLUM
TYPE OF FIRE ..... SELECTIVE: SEMI AND FULL AUTO
OPERATION ..... RECOIL–OPEN BOLT SYSTEM
MAGAZINE CAPACITY ..... 13-AND 25-ROUND MAGAZINES AVAILABLE
BARREL LENGTH 4-3/4- AND 7-INCH AVAILABLE

REMARKS: *THE PORTABILITY AND COMPACTNESS OF THIS WEAPON OFFERS A DEFINITE ADVANTAGE AS A POLICE OR MILITARY SPECIAL-PURPOSE WEAPON REQUIRING UNLIMITED FIREPOWER IN A SMALL PACKAGE. SOME MODELS HAVE TANGENT REAR SIGHTS GRADUATED UP TO 500 YARDS AND DETACHABLE SHOULDER STOCKS. THE ADDITION OF A SHOULDER STOCK, LONGER BARREL, AND AN IMPROVISED MUZZLE BRAKE SIMILAR TO THAT EMPLOYED IN MOST CONVENTIONAL SUBMACHINE GUNS (NOTABLY THE THOMPSON SMG) MAKES THE SYSTEM MORE EFFECTIVE AS A SMG. MAGNA-PORTING THE BARREL ALSO REDUCES THE MUZZLE CLIMB DURING AUTOMATIC FIRING.*

MOST MILITARY-ISSUE GUNS WITH TANGENT REAR SIGHTS HAVE A SLOT AT THE BACK OF THE GRIP FOR A SHOULDER STOCK ATTACHMENT AND ARE READILY CONVERTIBLE TO A VERY ACCURATE, LONG-RANGE PISTOL WITH THE STOCK ATTACHED. COMMERCIAL MODELS WITHOUT SLOTS CAN ALSO BE ADAPTED FOR A STOCK BY SIMPLY PATTERNING A SLOT ON A SMALL FIXTURE AND BRAZING OR SILVER-SOLDERING IT ONTO THE GRIP. A SKELETON-TYPE DETACHABLE STOCK IS MUCH EASIER TO BUILD THAN THE CONVENTIONAL WOODEN SHOULDER STOCK.

SYSTEM OF OPERATION:

Originally, the Hi-Power pistol was issued and designed as a semiautomatic pistol with variant shoulder stock models. To convert the weapon to selective fire functioning without altering the receiver, it is necessary to improvise a separate trigger mechanism. Since the weapon is impossible to control with only one hand when it is on full automatic fire, it is necessary to add a forward grip to help control the upward motion of the muzzle during its operation. The forward grip contains the auxiliary trigger mechanism necessary to operate the weapon on semi or full automatic mode.

In the full automatic mode, it is advantageous to employ the proven open bolt system to prevent the possibility of "cookoff" or ignition of the cartridge by excessive heat build-up. The system allows the barrel to cool between firing intervals, since there is no ammunition in the chamber when the bolt is held in open position by the auxiliary sear. This will allow continuous ventilation during shooting intervals.

The original sear and sear lever must be replaced to operate the new open bolt system. The new sear must have a projecting lug with enough protrusion to be pressed down by the sear lever hook during the last 1/16-inch of travel by the fully closing slide. This will insure that the slide is fully locked to the barrel lugs before the hammer hits the firing pin to activate the cartridge.

The sear lever must have enough clearance to bypass the protruding lug while fully closing, until it touches the lever hook which forces the sear protrusion down, releases the hammer from cocked position, and ignites the cartridge. This

clearance also insures that the hammer will not be released before the slide is fully locked, causing malfunction or misfire during operation.

CONSTRUCTION DETAILS OF CONVERSION PARTS:

The auxiliary trigger mechanism and trigger housing can be readily built with or without the aid of machining. The trigger housing is steel sheet about 1/16-inch thick. The internal dimension of the housing must conform with the thickness of the Hi-Power's trigger guard where the rear portion of the auxiliary housing is to be mounted.

The auxiliary trigger and sear must also conform with the housing's internal dimension in order to avoid looseness. Hardended hex screws are preferable for mounting the auxiliary trigger housing to the Hi-Power's receiver. The receiver must be threaded for mount screws.

The auxiliary safety-selector mechanism can be positioned either to the left or right and is retained by a snap ring. It contains the index ball and spring, as does the conventional-type selector, for type of fire.

The one-piece grip may be either wood or plastic. The grip contains the crossbolt nut that mates with the grip screw in securing the grip to the auxiliary housing. The crossbolt nut contains the trigger return plunger and spring.

CAUTION: NEVER RETRACT THE SLIDE TO LOAD THE CHAMBER IF THE AUXILIARY TRIGGER MECHANISM THAT HOLDS THE SLIDE OPEN IS NOT INSTALLED. THE WEAPON WILL FIRE ON FULL AUTOMATIC UNTIL THE MAGAZINE IS EMPTY EVEN WITHOUT THE TRIGGER BEING PRESSED. This warning applies only if the original sear and sear lever are replaced with the sear and sear lever for automatic functioning. Then the sear is tripped every time the bolt is closed by the sear lever hook.

Note on operating the triggers (front/auxiliary and rear/original): The auxiliary trigger mechanism controls all the functioning in the conversion mode. The original trigger mechanism does not operate after the conversion parts are installed. Pressing the factory-original trigger will not have an effect on the conversion parts since it is completely deactivated once the conversion parts are installed.

The original safety lever and auxiliary safety selector lever can be activated at the same time the slide is retracted on the hold-open position. This insures a double safety system. However, to put the weapon in firing position, both safeties must be disengaged.

BROWNING HI POWER
"MACHINEPISTOLE"

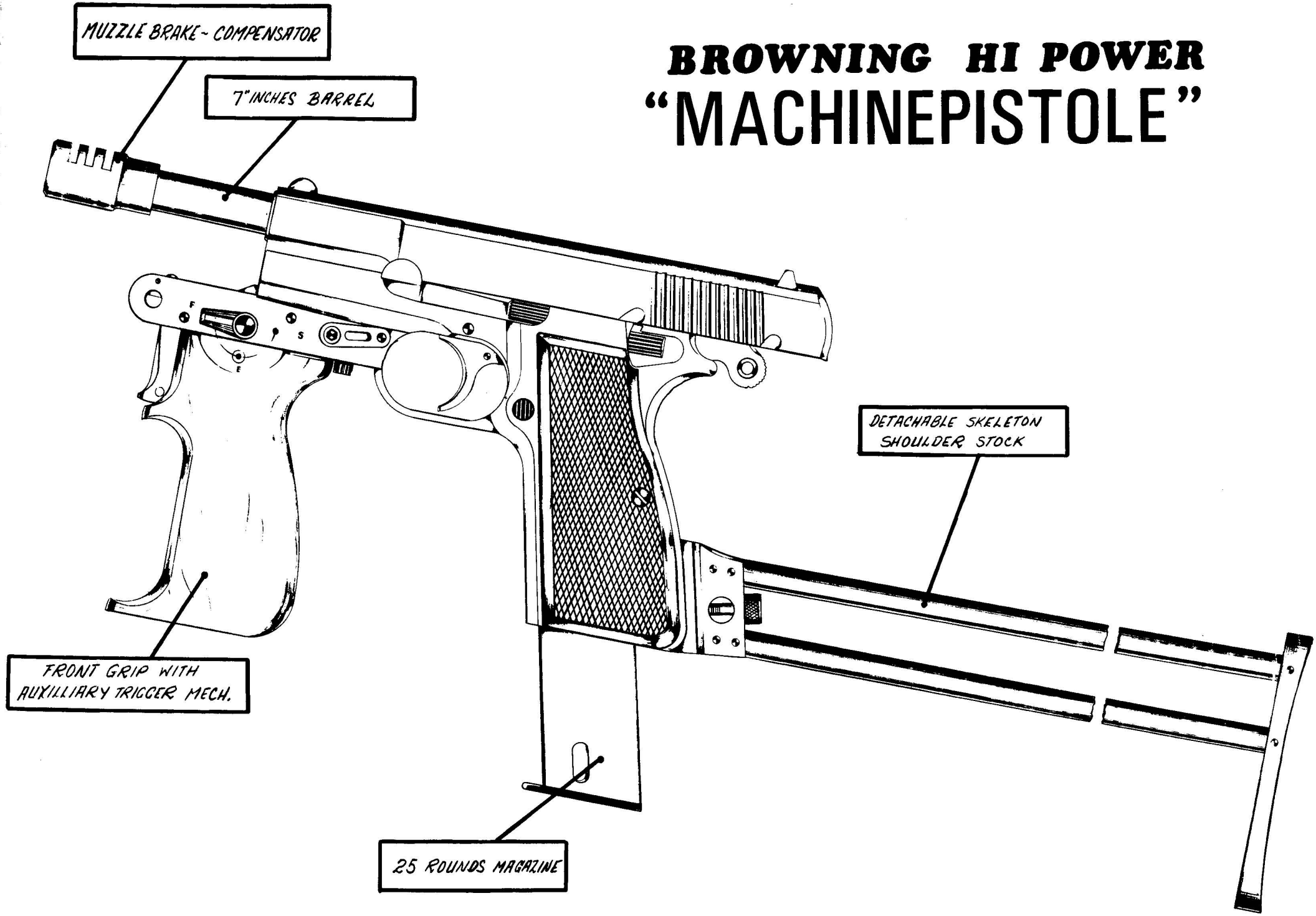

Copyright 1982 by Paladin Press

PARTS LIST:

1. *Selector lever pin*
2. *Auxilary sear stop pin*
3. *Auxilary trigger housing frame–formed sheet metal*
4. *Auxilary sear*
5. *Trip*
6. *Trip pin*
7. *Auxilary trigger pin*
8. *Trip spring plunger*
9. *Trip spring*
10. *Auxilary trigger*
11. *Trigger spring plunger*
12. *Trigger spring*
13. *Trigger spring and plunger assembly housing tube*
14. *One-piece wood front grip*
15. *Auxilary sear spring mount*
16. *Auxilary sear spring*
17. *Auxilary trigger housing connecting plate screw*
18. *Auxilary trigger housing assembly screws–two-piece hex type*
19. *Auxilary sear pin*
20. *Same as #4*
21. *Grip stock/plunger assembly housing tube retaining screw*
22. *Selector index stop notch shoulder–pressed-fitted milled metal rod*
23. *Connecting plate pin*
24. *Auxilary trigger housing plate insert*
25. *Replacement or modified original tripping shoulder–original sear lever*
26. *Replacement sear*
27. *Selector lever*
28. *C-clip–purchased*
29. *Selector index steel ball*
30. *Same as #27*
31. *Selector index ball spring*
32. *Selector lever/pin rivet*
33. *Auxilary trigger housing connecting plate*

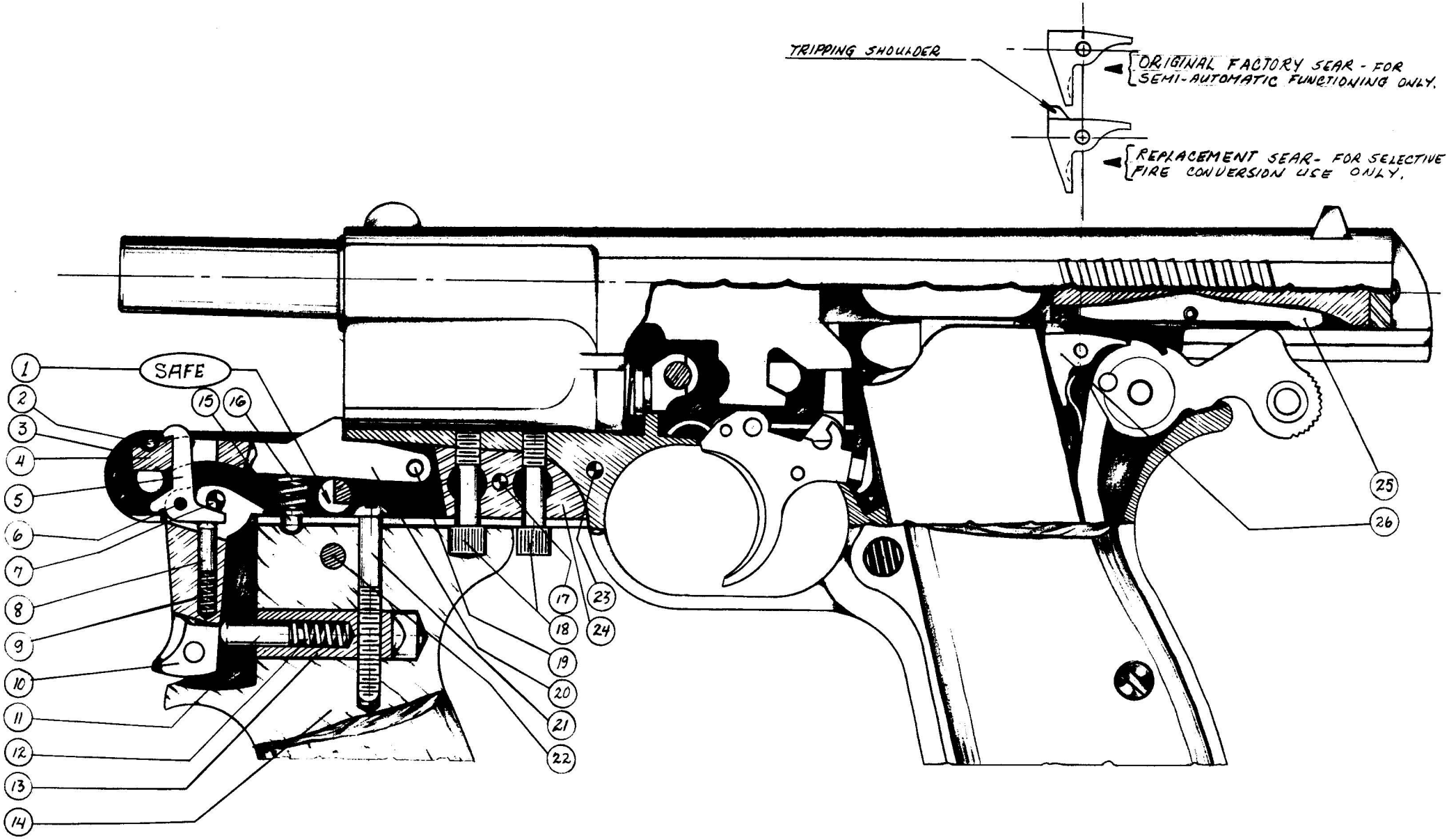

Copyright 1982 by Paladin Press

BROWNING HI POWER

.9mm Selective fire conversion

Copyright 1982 by Paladin Press

AUXILLARY TRIGGER MECHANISM
~ FOR SELECTIVE FIRE CONVERSION ~

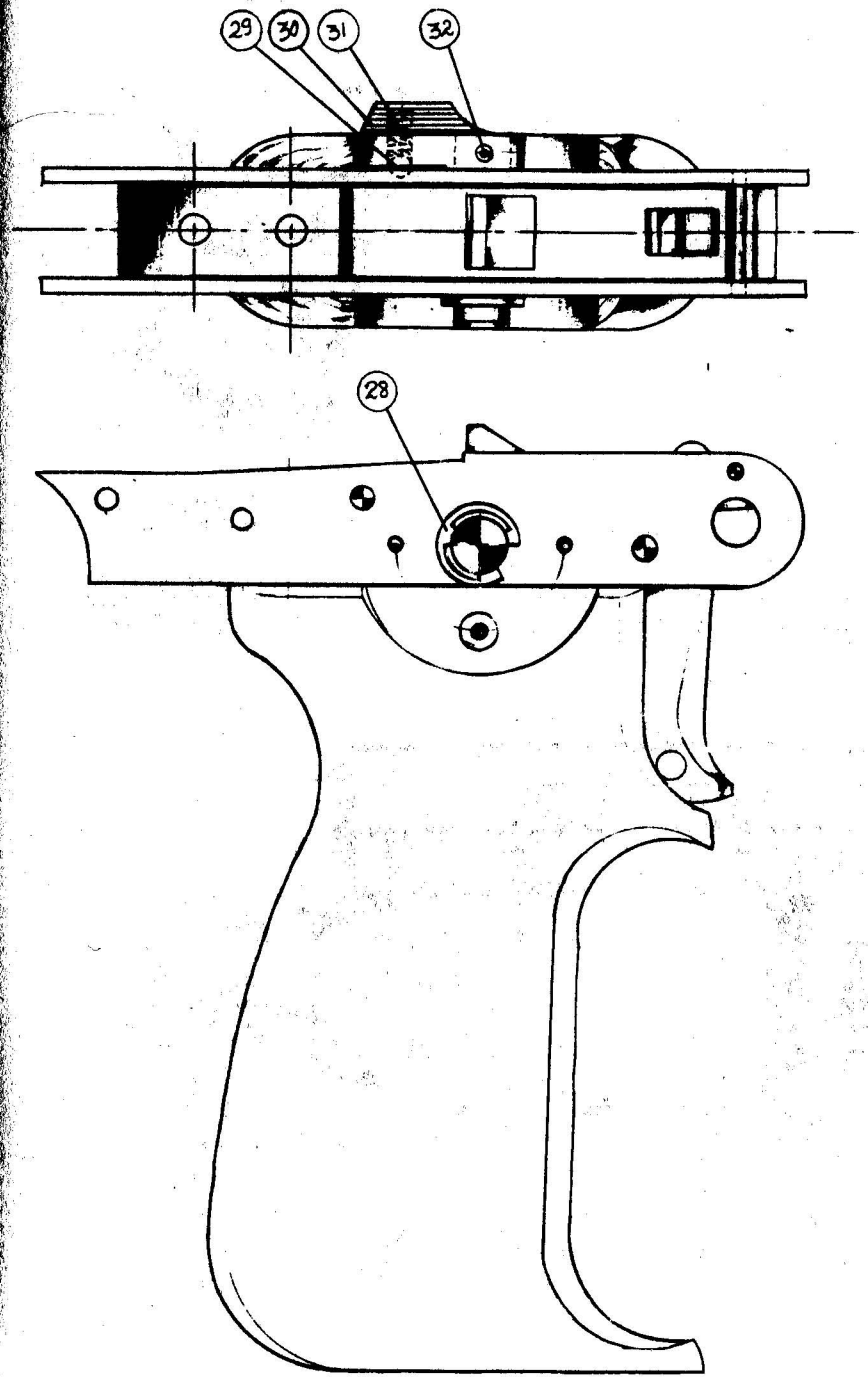

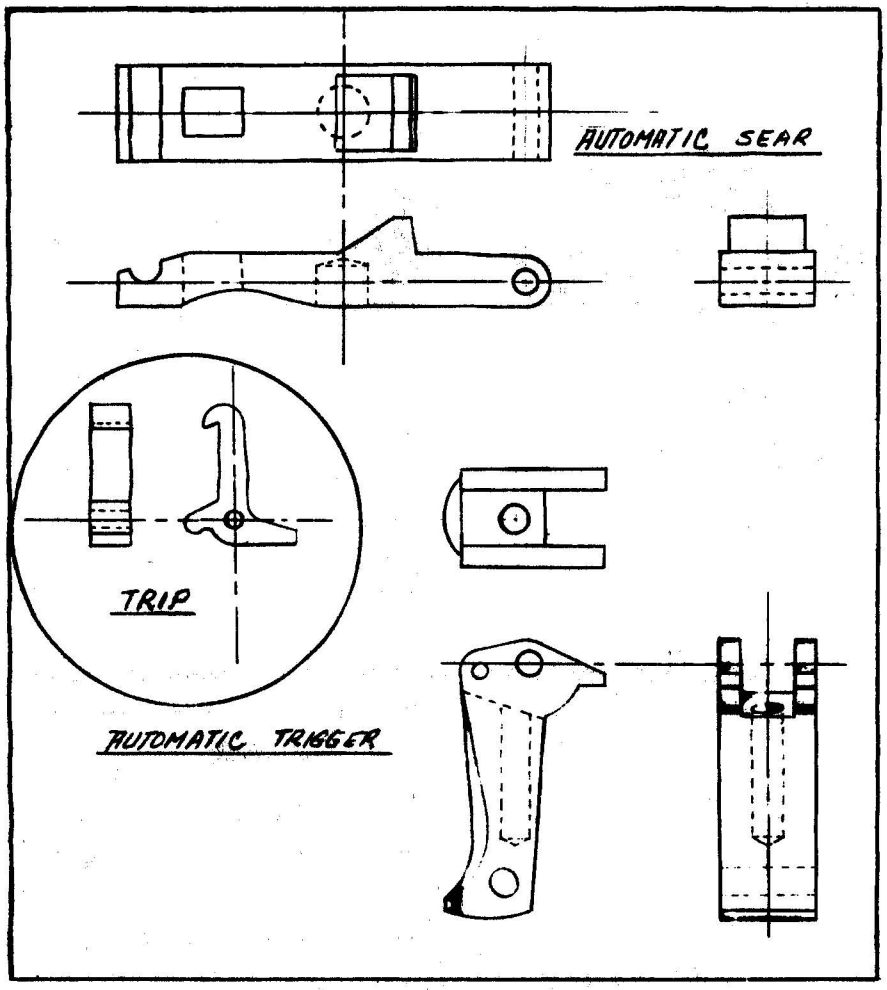

Copyright 1982 by Paladin Press

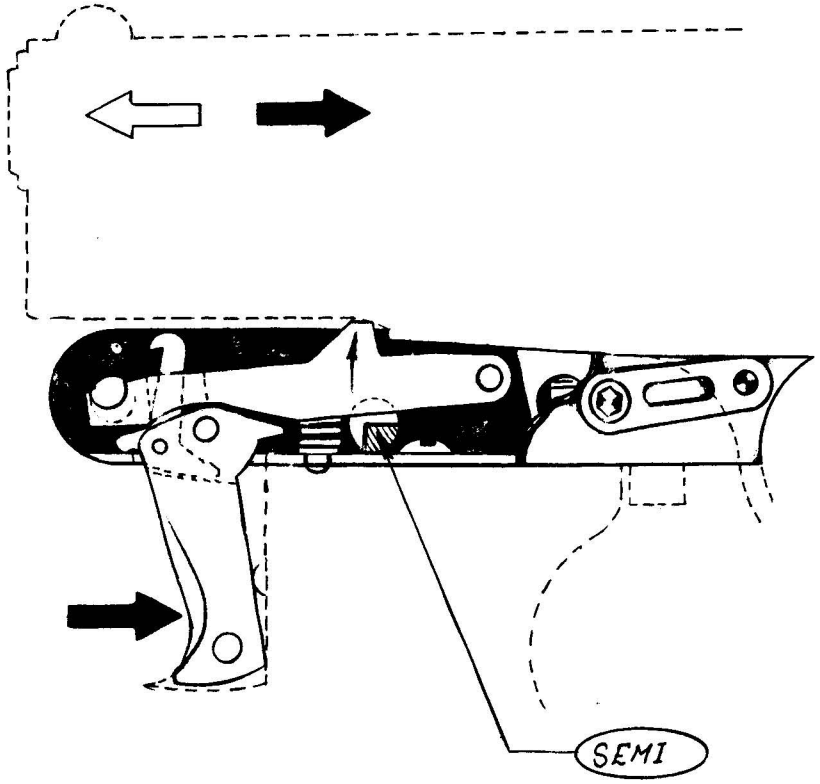

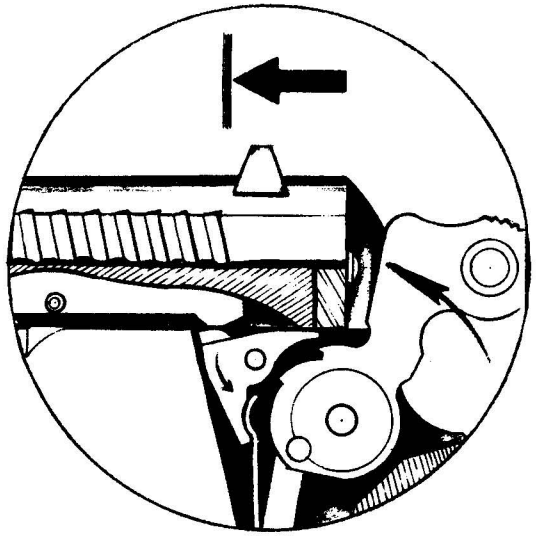

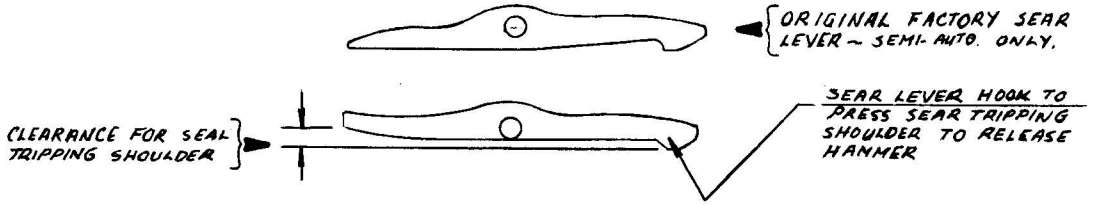

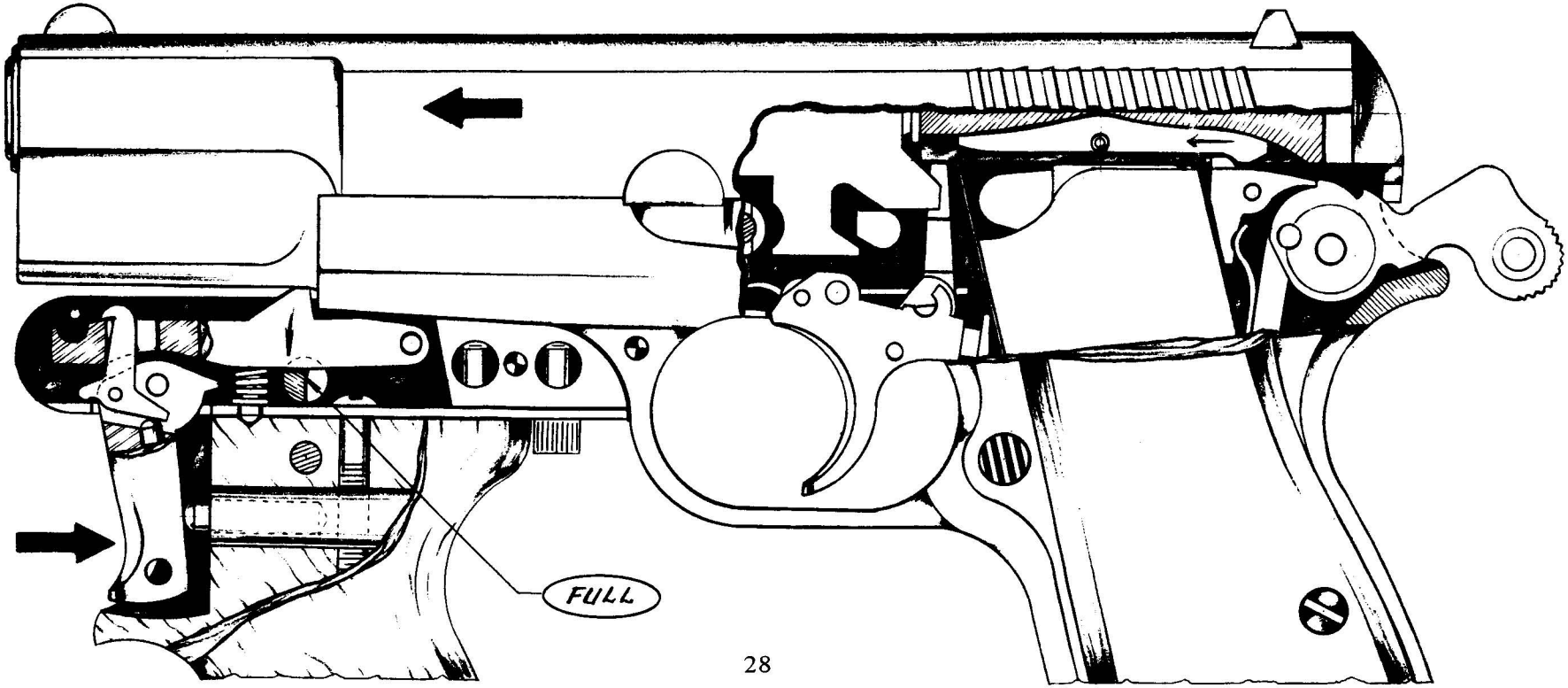

Copyright 1982 by Paladin Press

.45 BULPUP SILENCED PISTOL

SPECIFICATIONS:

CATEGORY	IMPROVISED-HANDMADE
CALIBER	45 ACP, .32, OR.25 ACP
TYPE OF FIRE	SINGLE ACTION
OPERATION	BLOWBACK ACTION

REMARKS: *THIS PISTOL DESIGN CONCEPT FULFILLS DUAL REQUIREMENTS THAT THE FAMOUS SLEEVE GUN DOES NOT INCORPORATE. THE WEAPON CAN BE FIRED WHILE CONCEALED UNDER THE OPERATOR'S COAT AND IS ALMOST UNDETECTABLE IN POOR LIGHT. SINCE A FIXED SIGHT IS INCORPORATED, IT ALSO OFFERS THE ADVANTAGE OF BEING ABLE TO BE ACCURATELY AIMED LIKE THE STANDARD WELROD PISTOLS. THE WEAPON SHOWN IS THE .45 CALIBER ACP VERSION ALTHOUGH A MUCH SMALLER VERSION FOR .32 CALIBER AND 25 ACP CHAMBERING IS MUCH MORE CONCEALABLE. THE 45 ROUND, HOWEVER, GIVES BETTER STOPPING POWER THAN THE FIRST TWO CALIBERS MENTIONED.*

CONSTRUCTION DETAIL:

The weapon can be constructed using primarily seamless tubing for its silencer casing. Its silencer system is simple, yet effective. The .45 Bulpup silenced pistol incorporates a single action hammer powered by a coil spring which can be manually cocked and lowered as in conventional single action revolvers or pistols. This feature offers more safety than a striker-operated system, since the striker cannot be lowered unless it is fired without a round in the chamber.

The pistol grip is simply formed from a 5/16-inch-diameter rod of milled steel, or 1/2-inch-thick plate, although 1/4-inch may be used. If the rod material is used, the trigger bar must be mounted offset. A small tube is brazed or soldered below the silencer casing to house the trigger bar. The skeletonized grip frame is also brazed or spot-welded to the silencer tubing.

The trigger housing is constructed from 1/16-inch-thick sheet metal using 3/8-inch-thick plate as a spacer on the rear part. This spacer is riveted or permanently brazed between the two sheet metal forms serving as the trigger housing frame.

The breechblock is a solid metal rod the same diameter as the inside diameter of the silencer tubing. The breechblock has a front face counterbore to accommodate the rim of the cartridge used. The metal block is spot-welded or permanently brazed to the front of the trigger housing frame. A spring-loaded extractor and ejector is assembled to the breechblock while the free-floating firing pin is secured in place by the breechblock connecting pin. The barrel can be either pinned or permanently brazed to the silencer tubing.

The barrel is ported and an expansion chamber surrounds it. The front portion of the barrel has a bleed hole on it to vent gasses to the front baffle channels while the pressure peak is still in the barrel. In the front of the barrel is the baffle channel where sets of metal spacers and a rubber disk are assembled. An extended false muzzle, which acts as an end cap, is screwed to the front end of the silencer casing.

To load the weapon, turn the trigger housing 35 degrees upward until the breechblock connecting pin clears the slot. Then pull it out from the silencer tubing. Load the barrel chamber then snap back the breechblock inside the silencer tubing until the connecting pin is parallel to its seat. Turn the trigger housing down 34 degrees so the connecting pin will seat on its locking slot to the silencer casing.

To fire the weapon, simply cock the hammer until it snaps with the sear. The sear and hammer are powered by a single spring. The hammer can be cocked and uncocked under the sleeve or inside a coat. The weapon is ideal for special operations and can be fired either concealed or as an accurate, short-range, silenced pistol.

Paladin Press

BULPUP SILENCED PISTOL CAL. 45 A.C.P.

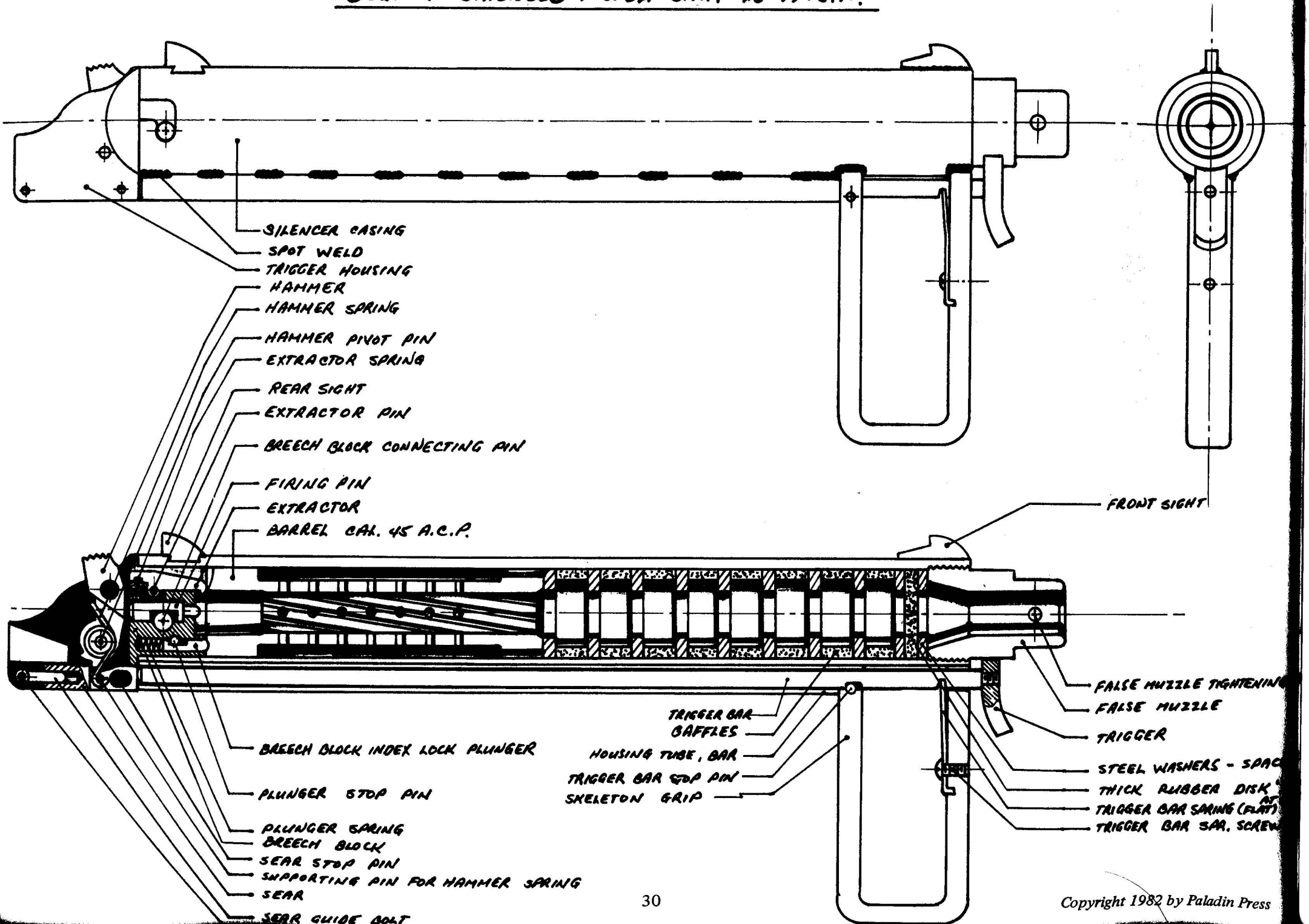

Copyright 1982 by Paladin Press

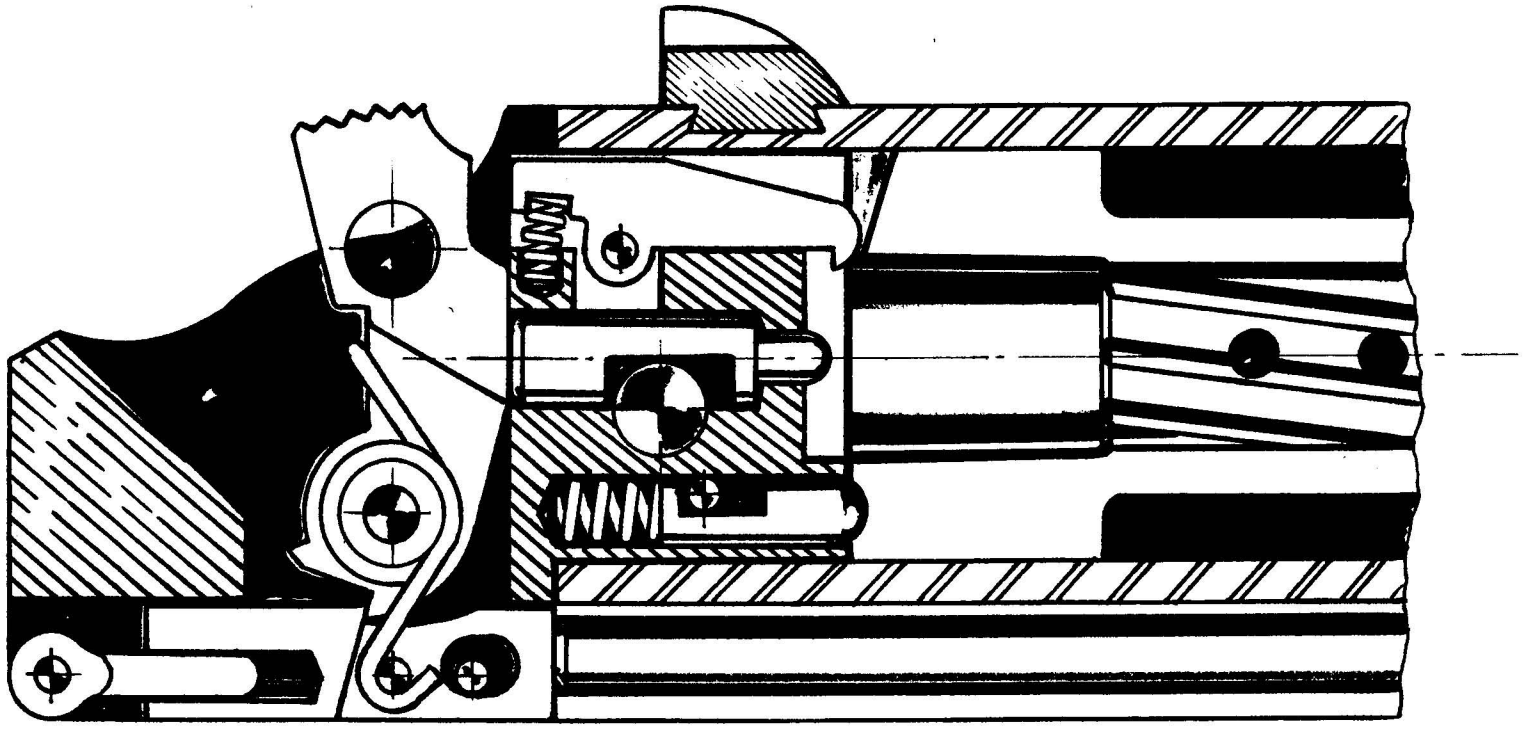

Detail: TRIGGER MECHANISM

pyright 1982 by Paladin Press

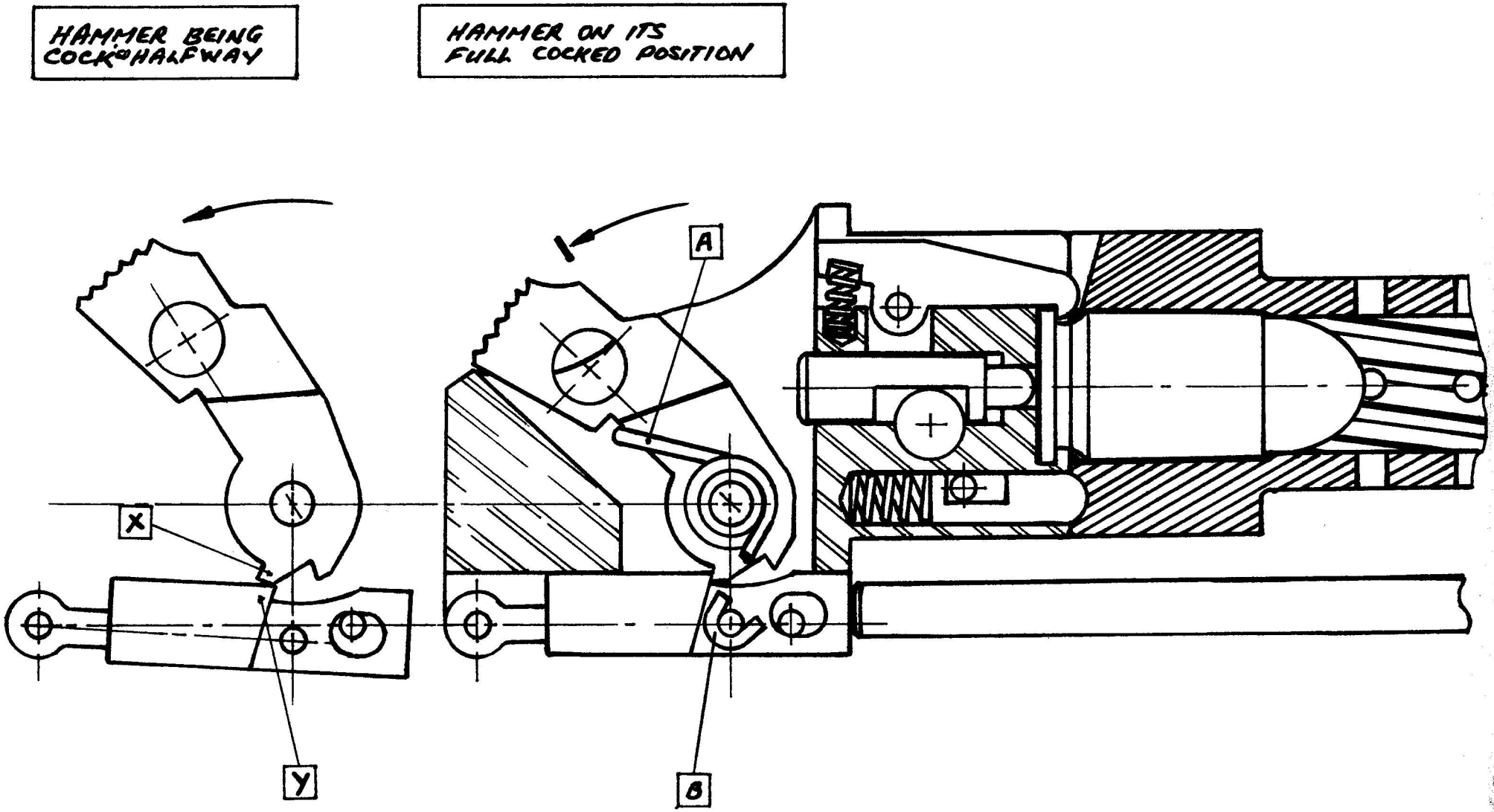

NOTES:

1. PART X OF HAMMER PUSHES PART Y OF SEAR WHILE HAMMER IS BEING COCKED TO ENGAGE WITH SEAR.
2. PART A OF HAMMER SPRING TENSION IS OPPOSED TO PART B TENSION OPERATING SEAR.

Copyright 1982 by Paladin Press

HAMMER

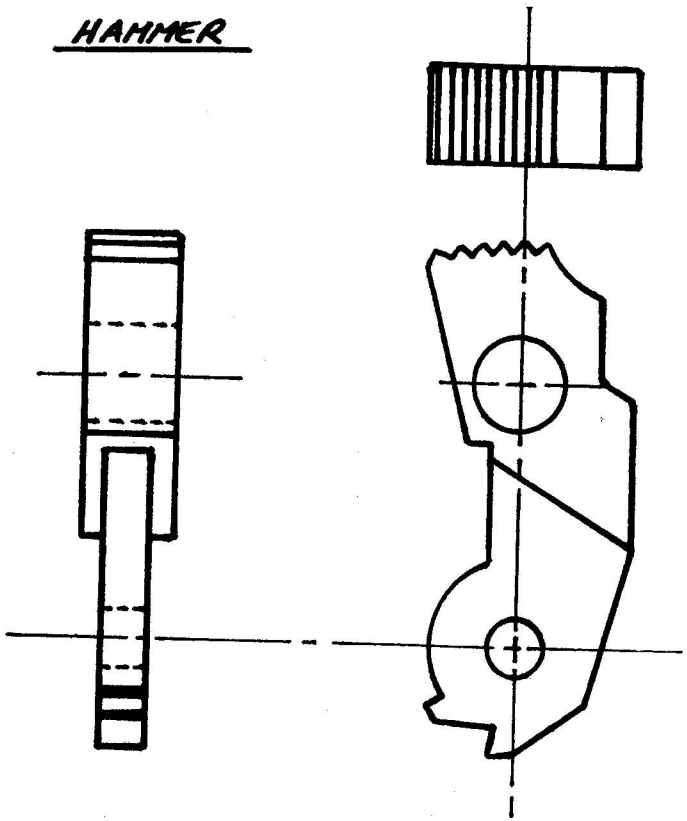

HAMMER SPRING

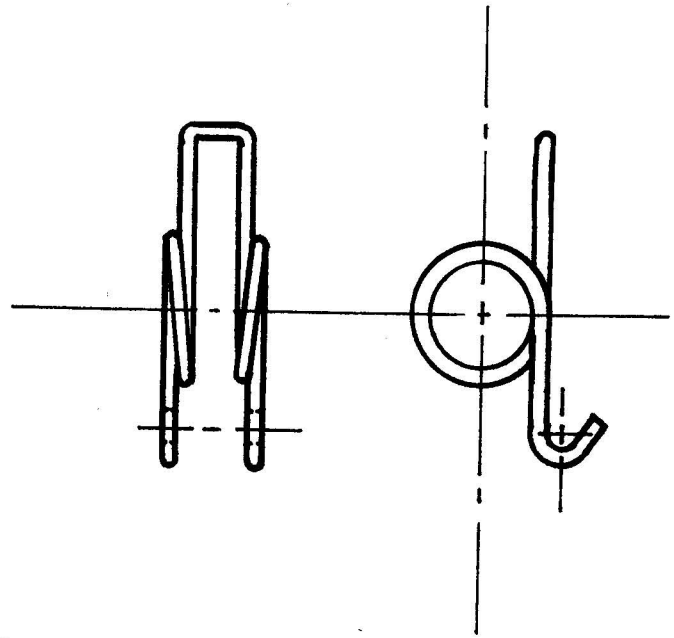

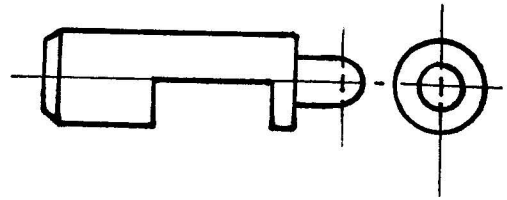

FIRING PIN

SEAR GUIDE ROD

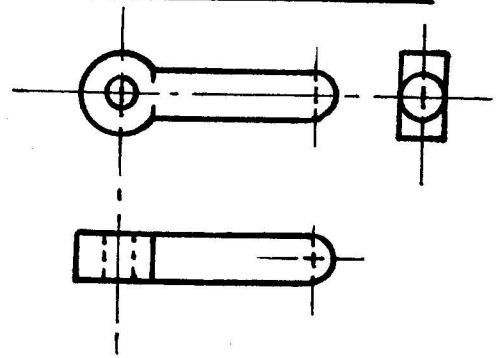

EXTRACTOR SPRING

SEAR

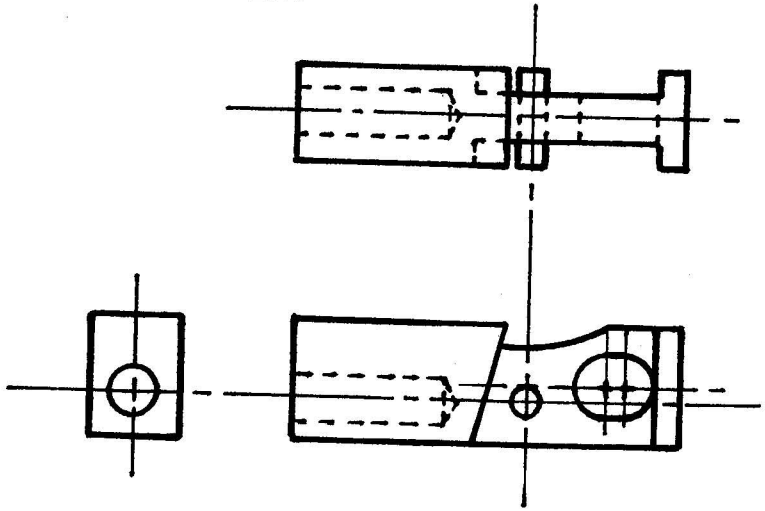

EXTRACTOR

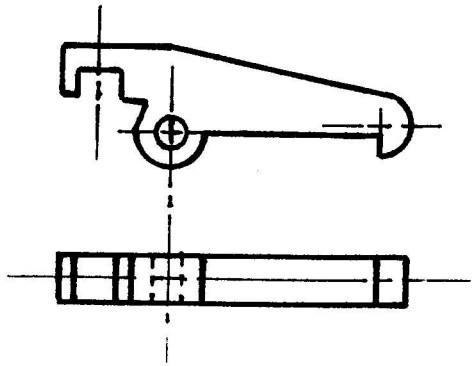

LOCKING BOLT INDEXER

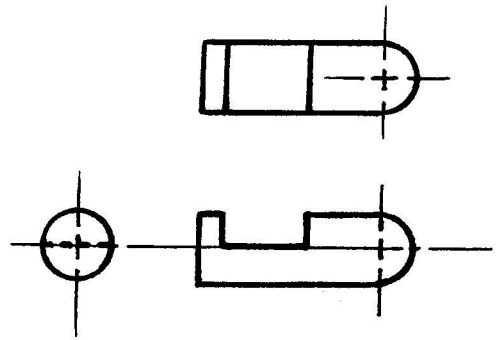

Scales: 2X

Copyright 1982 by Paladin Press

EXTRACTION DETAIL

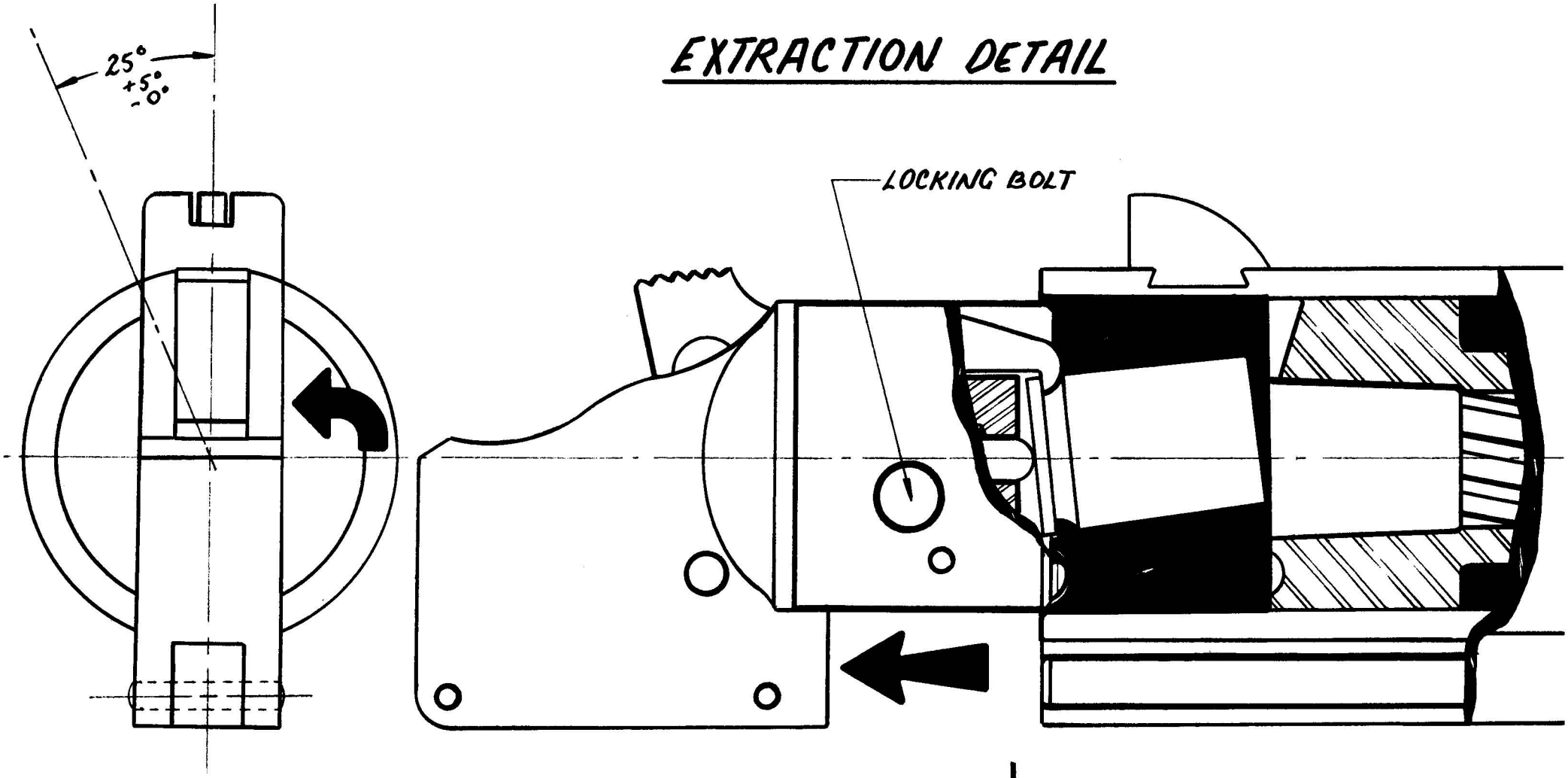

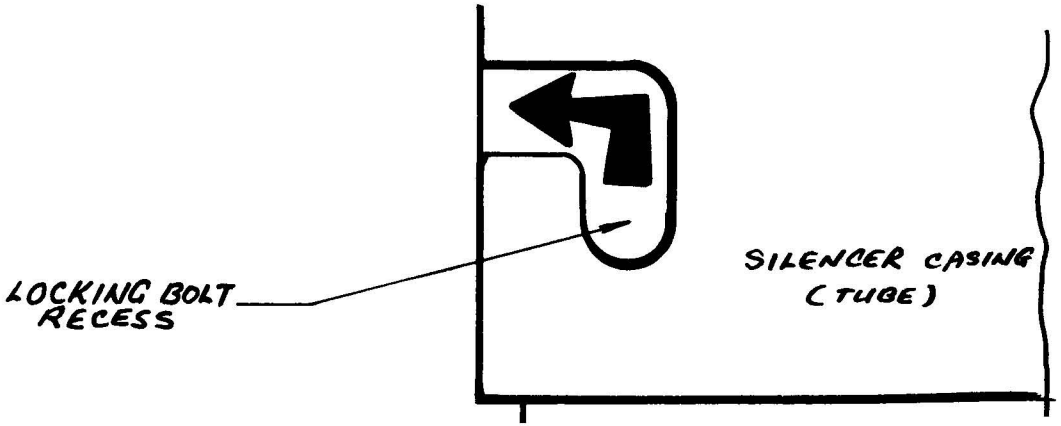

INSTRUCTIONS FOR EXTRATION

1. ROTATE TRIGGER HOUSING TO LEFT UNTIL THE LOCKING BOLT CLEARS ITS RECESS ON SILENCER CASING.
2. PULL TRIGGER HOUSING TO REAR ONCE BOLT CLEARS RECESS TO EXTRACT EMPTY SHELL. SHELL WILL FALL OF FROM EXTRACTOR GRIP ONCE HOUSING CLEARS THE HOUSING TUBING.

Copyright 1982 by Paladin Press

Detail: BREECH BLOCK-TRIGGER HOUSING

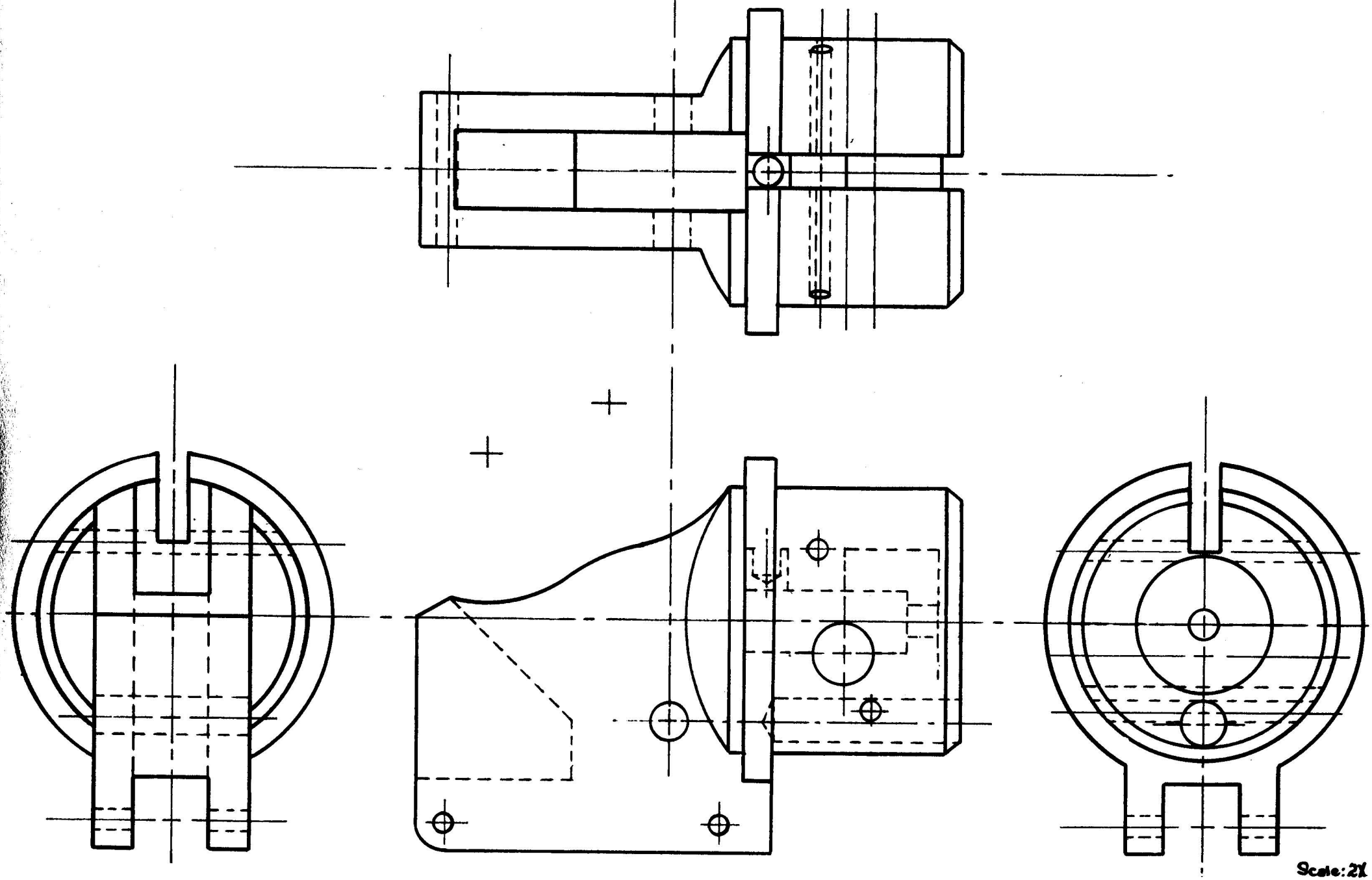

Copyright 1982 by Paladin Press

DETAIL : BARREL .45 ACP

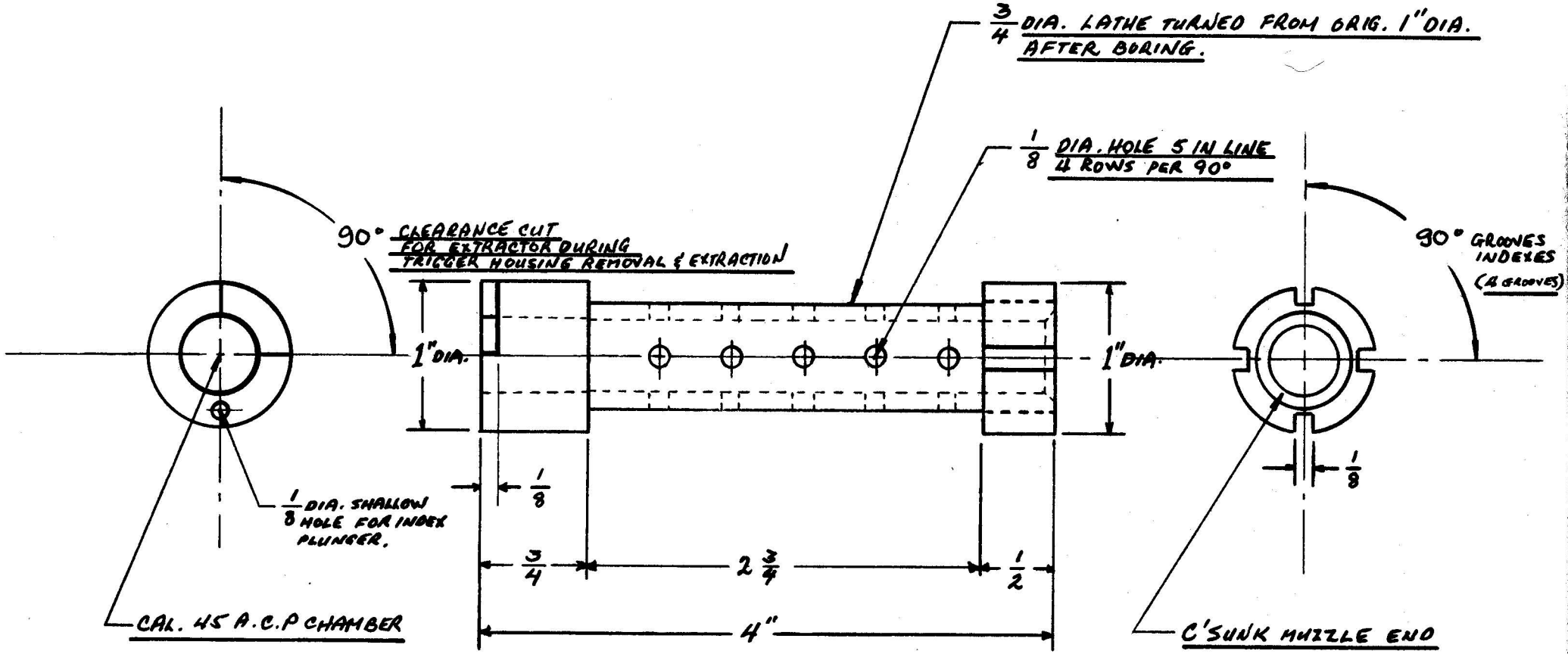

NOTES:

1. BARREL IS TO BE ASSEMBLED TO SILENCER TUBE BY PRESSED FITTING METHOD. THE REAR CHAMBER AREA MATED WITH TUBING IS TO BE BRAZED AROUND BARREL DIA. TO PREVENT GAS ESCAPE.
2. THE SILENCING & TRIGGER SYSTEM ARRANGEMENT IS ADOPTABLE TO CALS. 45 ACP, 380 ACP., 32 ACP & .25 A.C.P. PISTOL AMMUNITIONS.

Copyright 1982 by Paladin Press

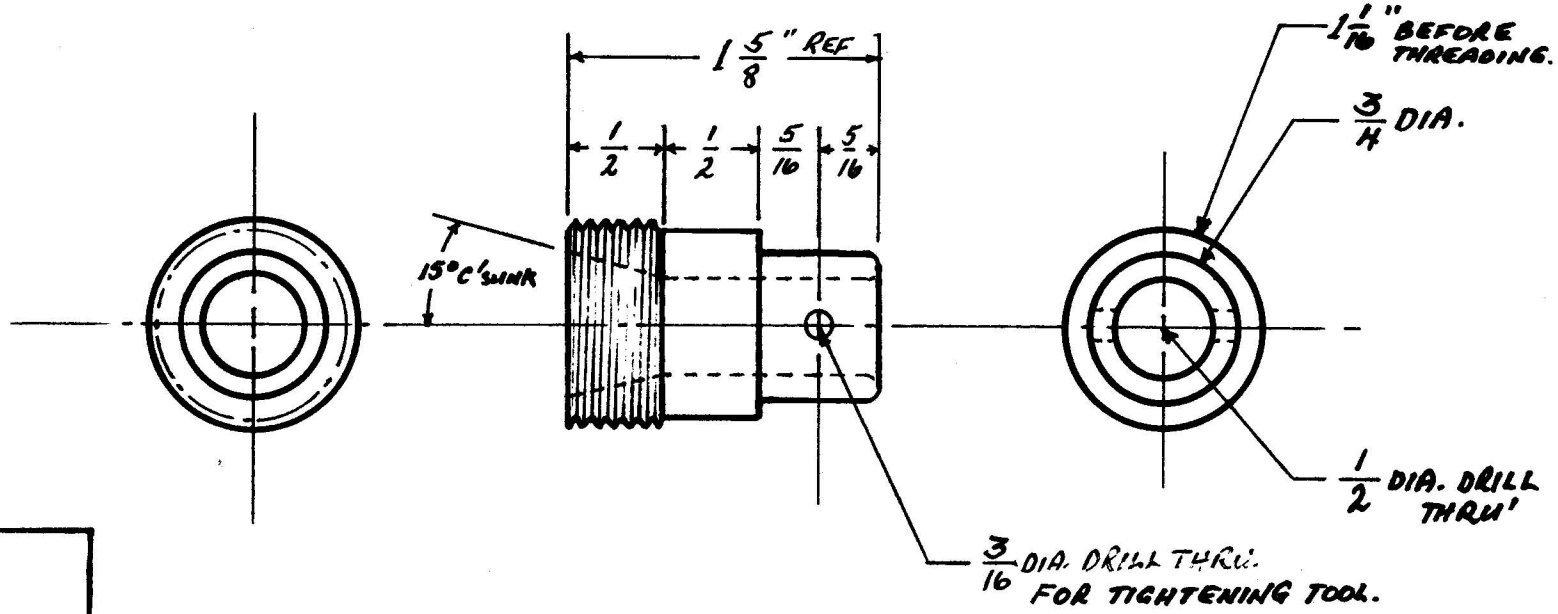

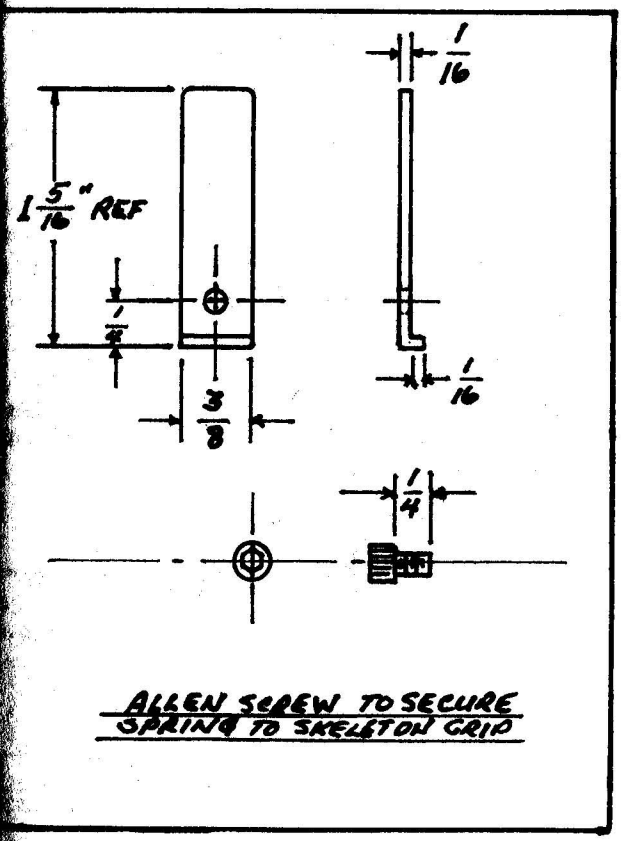

PART NAME	Scale:
FALSE MUZZLE & TRIGGER ROD SPRING & SCREW	FULL

Copyright 1982 by Paladin Press

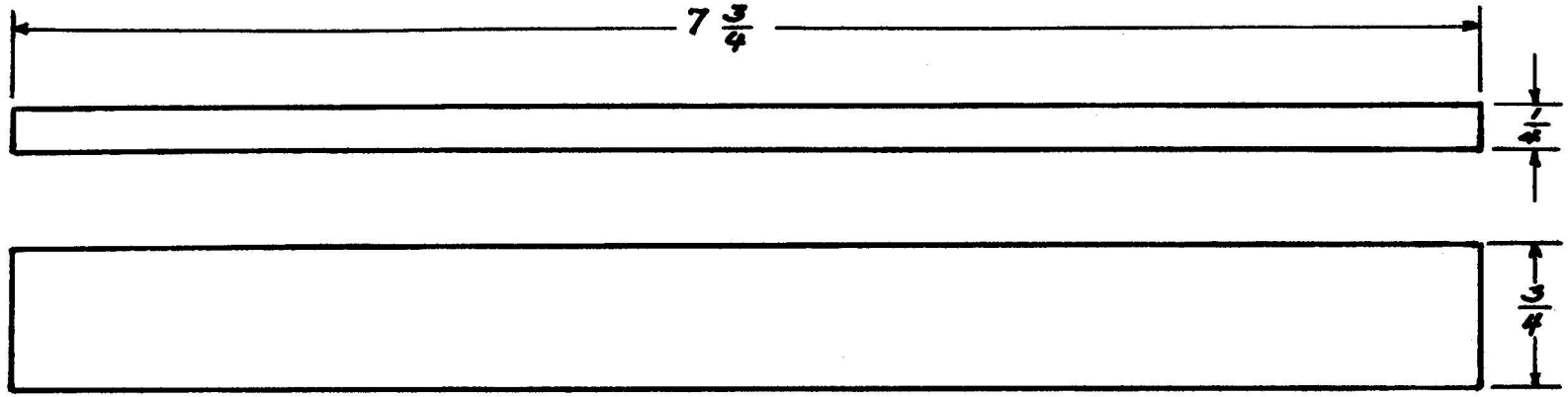

SPECIFICATION - "SKELETON GRIP."

1. PRE CUT SOFT STEEL PLATE PRIOR TO FORMING.
2. FORK ENDS TO BE WELDED TO SILENCER TUBE.

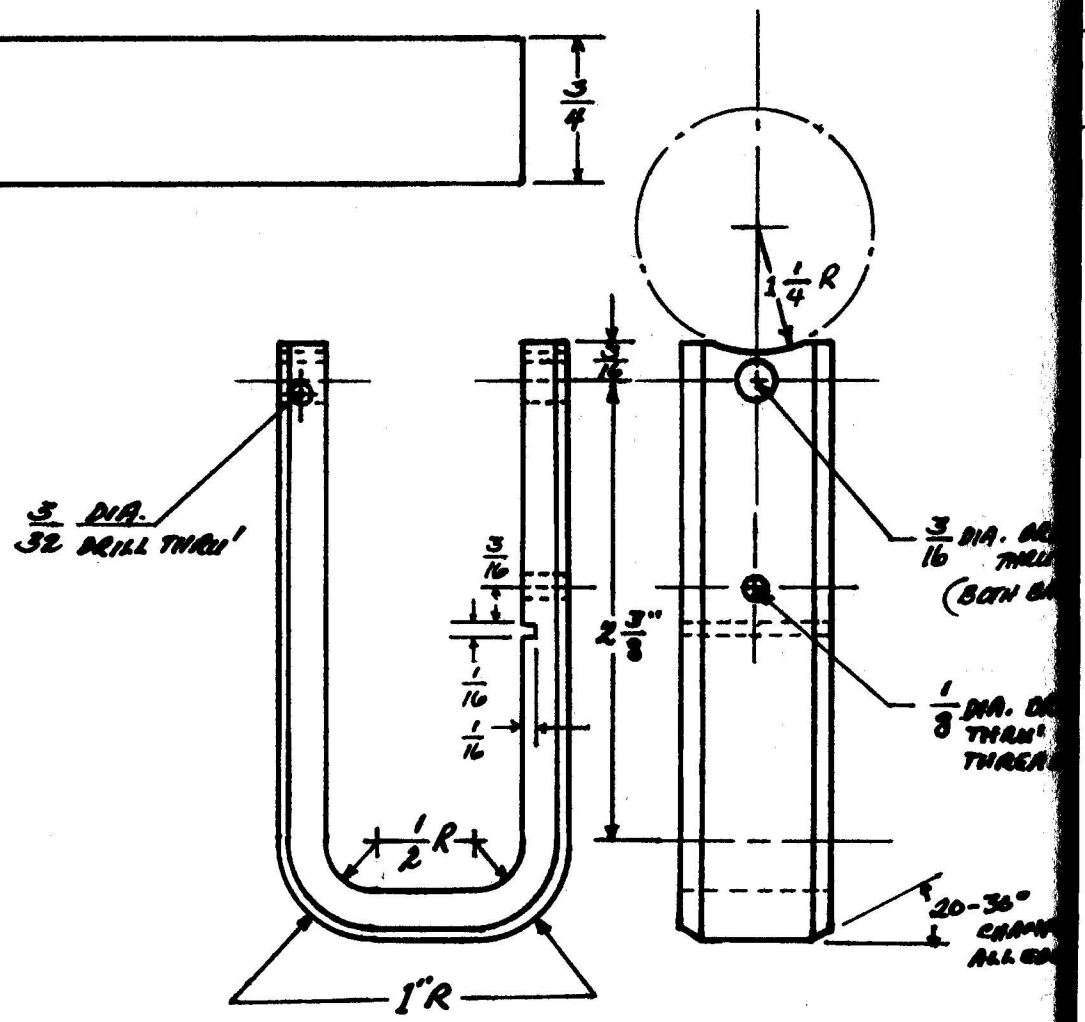

PART NAME	Scale:
SKELETON TYPE GRIP	FULL

Copyright 1982 by Paladin Press

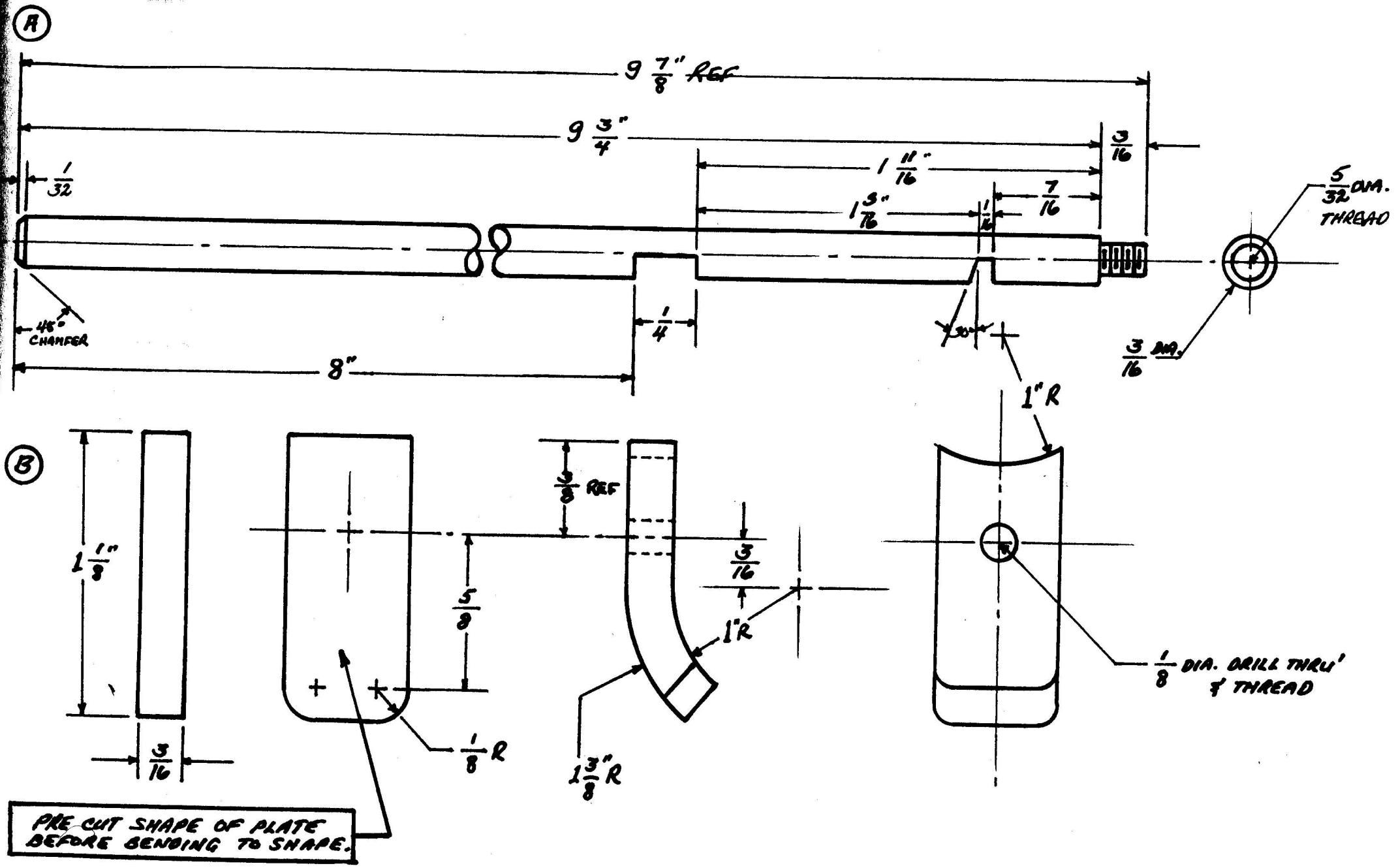

PART NAME	Scale:
A. TRIGGER BAR ROD & B. TRIGGER	2 X

Copyright 1982 by Paladin Press

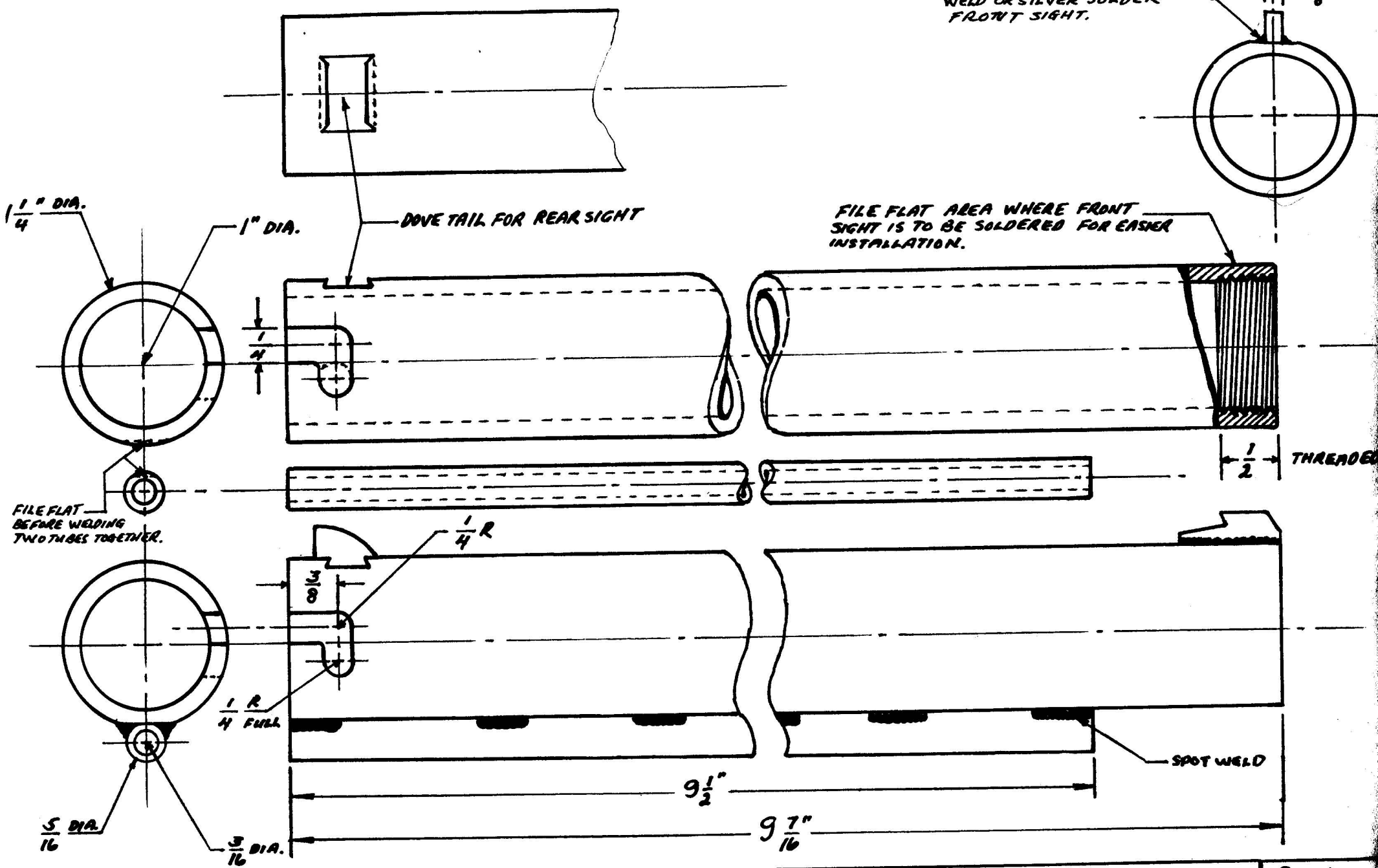

PART NAME	Scale:
SILENCER CASING & TRIGGER BAR HOUSING TUBE	FULL

Copyright 1982 by Paladin Press

FUTURE ASSAULT SHOTGUN

SPECIFICATIONS: K1

CATEGORY	IMPROVISED-HANDMADE
CALIBER	12 GAUGE, 2½-INCH SHELL MAX.
TYPE OF FIRE	SELECTIVE, SEMIFULL AUTO.
BARREL LENGTH	15-INCH WITHOUT MUZZLE BRAKE
OVERALL LENGTH	27-INCH WITHOUT MUZZLE BRAKE
OPERATION	DIRECT GAS
FEED	5, 10, 15-SHOT MAGAZINE

SPECIFICATIONS: K2

CATEGORY	IMPROVISED-HANDMADE
CALIBER	12 GAUGE, 2½-INCH SHELL MAX.
TYPE OF FIRE	FULL AUTO
BARREL LENGTH	8¾-INCH (9-INCH MAX.)
OVERALL LENGTH	20-INCH
OPERATION	DIRECT GAS
FEED	5, 10, 15-SHOT MAGAZINE

REMARKS: *THE CONCEPT OF THIS SYSTEM IS TO CREATE A FAST-FIRING COMPACT WEAPON THE SIZE OF A STANDARD SUBMACHINE GUN THAT USES CONVENTIONAL CARTRIDGES AND DELIVERS A VOLUME OF FIRE MANY TIMES GREATER THAN ANY FAST-FIRING SUBMACHINE GUN NOW IN EXISTENCE.*

THE BASIC ADVANTAGE CAN BE EMPLOYED IN CLOSE-QUARTERS ENCOUNTERS IN TRENCHES, AND SURPRISE ATTACKS WHEN A LARGE VOLUME OF INSTANT FIREPOWER IS REQUIRED. A CONVENTIONAL FAST-FIRING SUBMACHINE GUN OR A MACHINE PISTOL HAS A THEORETICAL FIRING RATE FROM 600 TO 1,200 ROUNDS PER MINUTE AS ON THE MAC M11. THE F.A.S. K1 OR K2 ASSAULT SHOTGUNS CAN DELIVER UP TO TWENTY TIMES MORE FIREPOWER WHEN LOADED WITH 00 BUCKSHOT.

SYSTEM OF OPERATION:

A modified Browning B.A.R. magazine can be used to take five 12-gauge, 2½-inch shells. The magazine is about three inches in loading length. The remaining one-half-inch in front of the magazine follower will act as the feed ramp. A long semicurved 10-15 shot, single row magazine can be manufactured if you can make a magazine-forming die.

The weapon fires from the open bolt position as do most conventional submachine guns. It does, however, use a simple locking system of direct gas to operate the locking plate. During the moment of discharge, the gasses from the shell are bled off to the gas port on top of the chamber area just past the front of the shell immediately after being released. The escaping gasses then push the locking plate upward onto the top slot of the barrel boss in line with the hump of the locking plate. This engagement of the locking plate to the top-slotted shoulder of the barrel boss by gas pressure prevents the bolt from rapid opening while pressure is at its peak.

The locking plate moves down under spring tension once pressure has dropped thus permitting the bolt to recoil, extract, eject, and reengage with the sear if the selector lever is set on semiautomatic (FAS-K1 model). The gun is then ready for the next shot.

The bolt face utilizes a fixed firing pin. The bolt is under heavy recoil spring tension necessary for positive stripping and loading of cartridges to chamber. The weapon fires as soon as the bolt fully closes on a round loaded in the chamber.

To keep at a minimum the weight of this somewhat bulky, but short weapon, sheet metal stamping is ideal for the receiver frame using light alloy inserts in areas of limited stress. The sight-base/carrying handle combination is aluminum casting.

The balance of the weapon is placed on center of gravity. The straight stock configuration of the butt is well-placed to the center of the bore axis and will insure a positive reduction of muzzle climb during full automatic firing. In addition to this feature, a solid-front grip is also incorporated for steady control on full auto or long-burst periods. The FAS-K1 uses a sophisticated muzzle brake for excellent handling that makes this weapon the ultimate fighting shotgun in its class.

PARTS LIST: FAS-K2 ASSAULT SHOTGUN

1. *Rear barrel pins*
2. *Cocking handle*
3. *Tubing insert*
4. *Front sight elevation screw—headless type*
5. *Front sight*
6. *Sight base/carrying handle front screw*
7. *Locking plate spring*
8. *Locking plate pin*
9. *Locking plate*
10. *Gas port*
11. *Tubing insert pin*
12. *Barrel for 12 gauge shotgun*
13. *Barrel pins—press-fitted and riveted to barrel boss and receiver frame*
14. *Carrying handle/sight base frame—aluminum cast or machined*
15. *Locking plate insert tubing*
16. *Tubing pins—to permanently secure tubing to bolt body*
17. *Carrying handle rear screw*
18. *Receiver frame—formed sheet metal*
19. *Magazine catch*
20. *Magazine catch pin*
21. *Magazine catch spring*
22. *Bolt catch—square plate press-fitted horizontally to bolt with sear on cocking*
23. *Recoil spring—heavy type*
24. *Recoil spring guide*
25. *Sear pin*
26. *Sear*
27. *Ejector*
28. *Buttstock pins*
29. *Buttstock plate*
30. *Recoil pad—rubber*
31. *Magazine catch spring base pins—riveted permanently to receiver frame*
32. *Lower receiver cover screw*
33. *Sear spring*
34. *Sear stop pin*
35. *Lower receiver body*
36. *Ejector sort*
37. *Extractor spring*
38. *Extractor pin*
39. *Safety lever pin*
40. *Trigger bar and linkage pins*
41. *Extractor*
42. *Linkage pivot pin*
43. *Linkage rear pin—pushing rear of sear down when lower part of linkage is pulled by trigger bar*
44. *Rear sling swivel retaining pin*
45. *Rear sling swivel pin*
46. *Front barrel support*
47. *Front grip—wood or plastic wrap-around type*
48. *Front grip screws*
49. *Trigger guard*
50. *Trigger*
51. *Trigger pin*
52. *Trigger bar link pin*
53. *Grip stock—two-piece wood or plastic*
54. *Grip frame—welded to receiver and lower support*
55. *Grip stock screws*
56. *Trigger bar link*
57. *Trigger bar link pin*
58. *Firing pin—fixed type*
59. *Firing pin retaining pin—roll pin preferred*
60. *Modified Browning B.A.R. magazine—four or five round capacity*

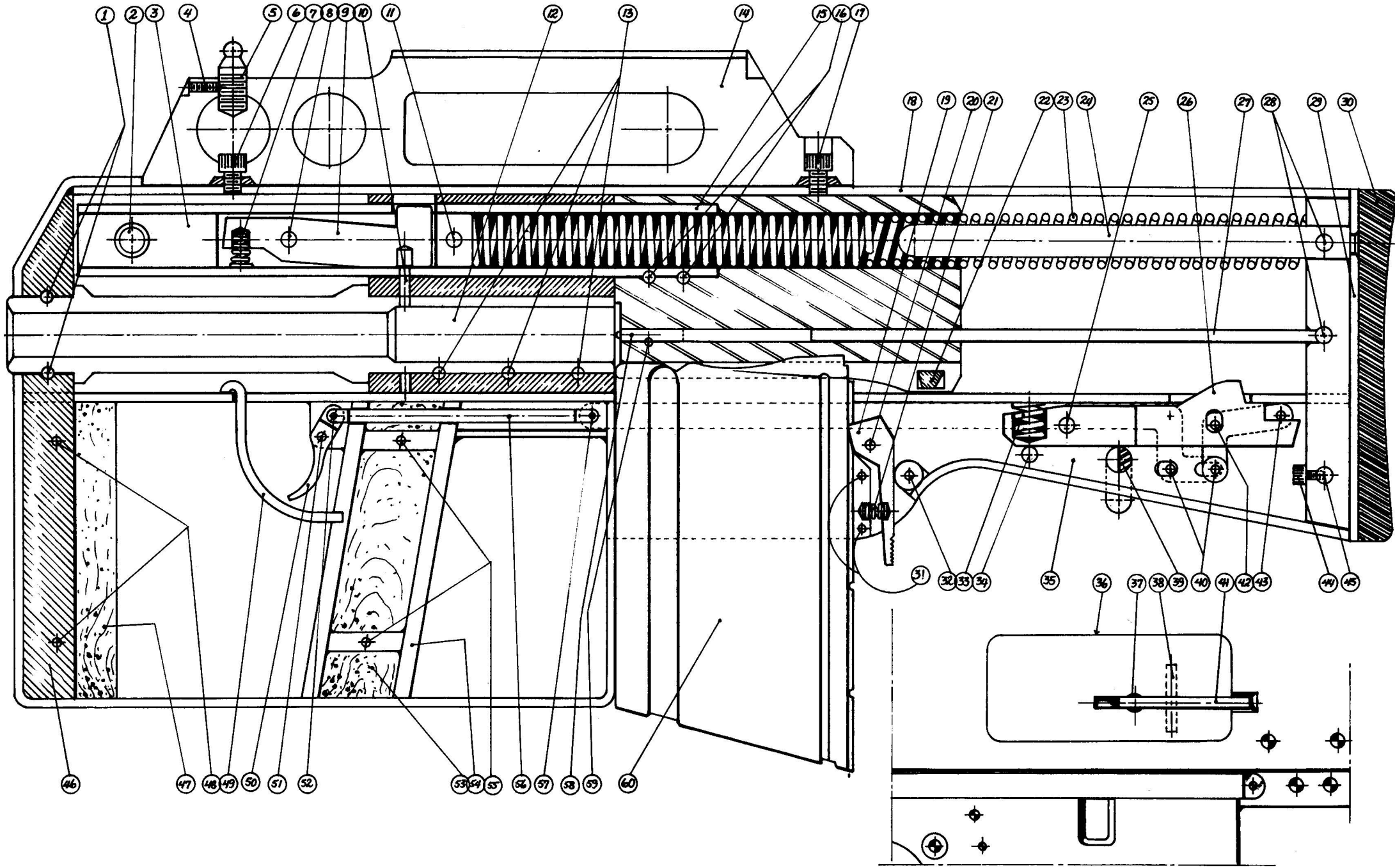

Copyright 1982 by Paladin Press

WEAPON COCKED-"READY TO FIRE"

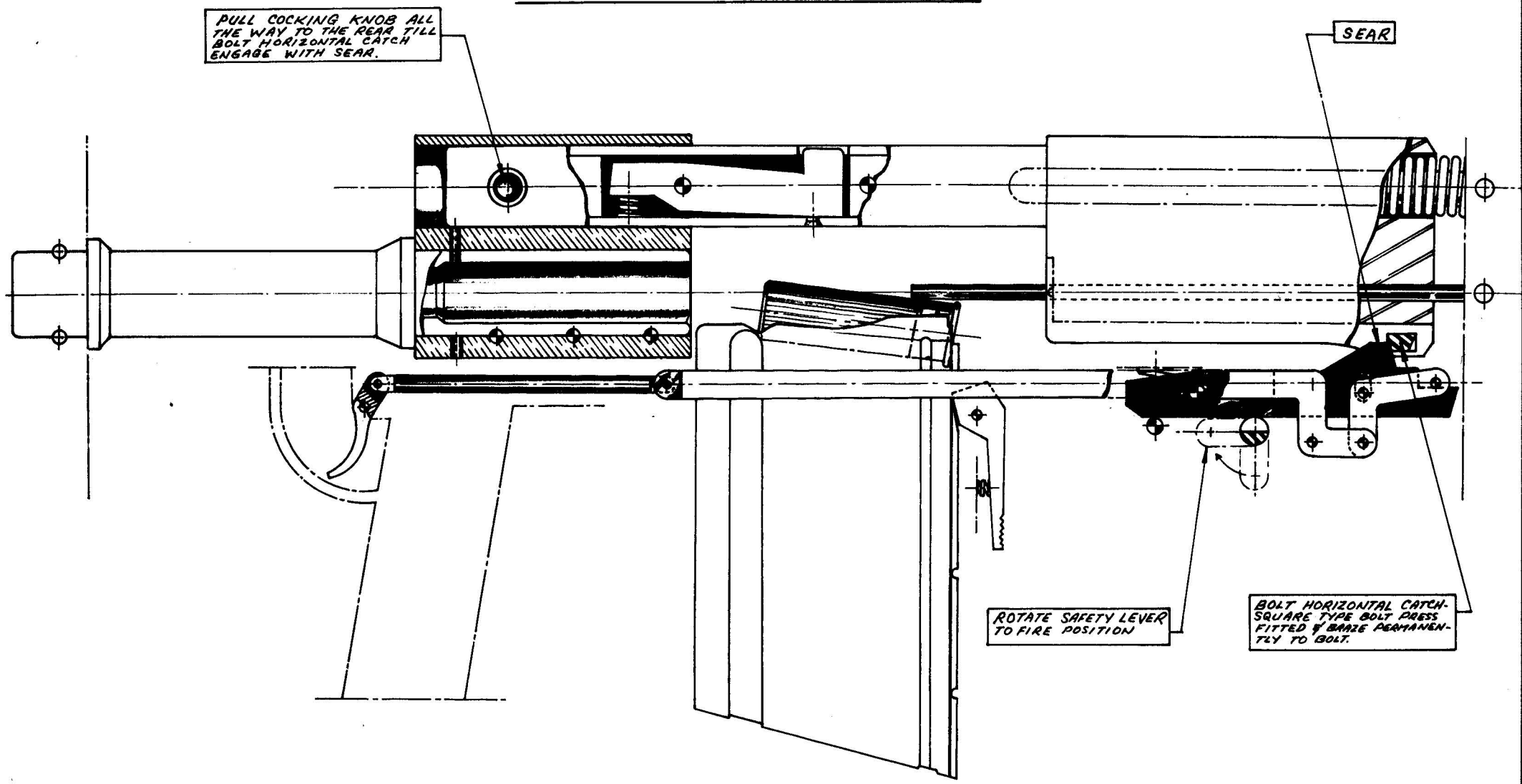

Copyright 1982 by Paladin Press

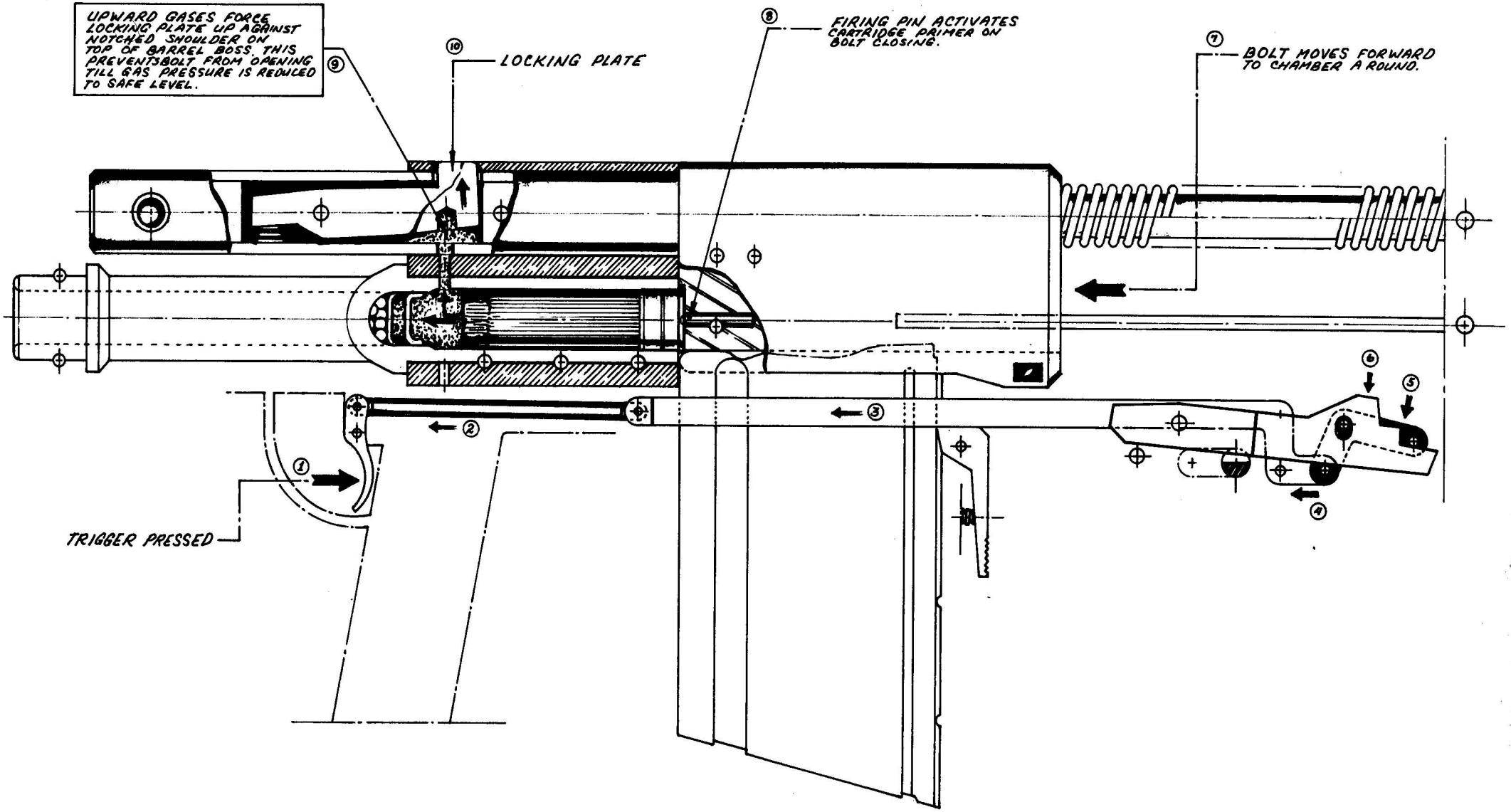

MOMENT OF FIRING

Copyright 1982 by Paladin Press

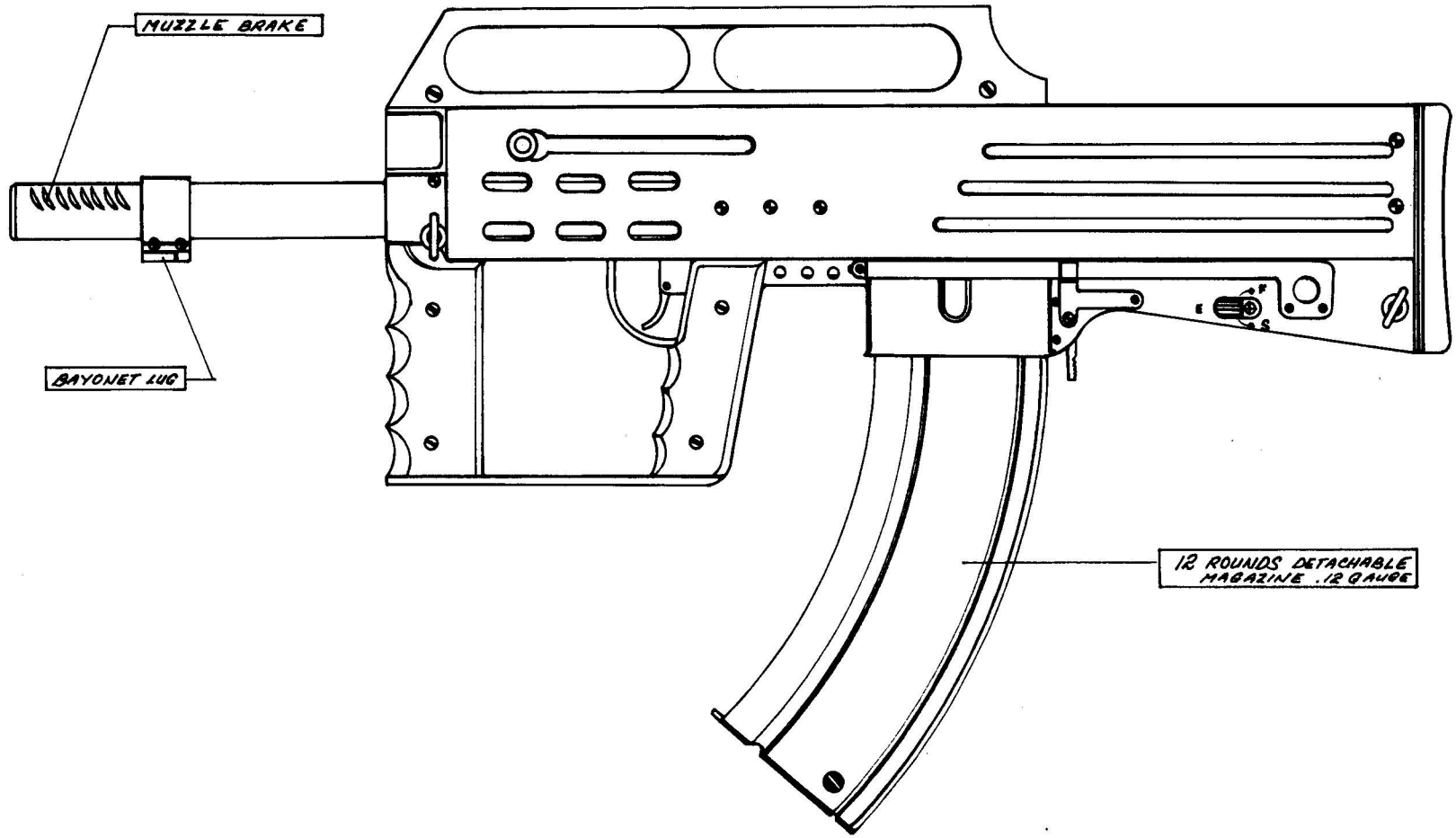

Copyright 1982 by Paladin Press

TRIAD PROTECTION SYSTEM

SPECIFICATIONS:

CATEGORY	IMPROVISED-HANDMADE
CALIBER	410, 12 or 16 GAUGE
OPERATION	BLOWBACK IGNITION
TYPE OF FIRE	SINGLE SHOT

REMARKS: *THE TRIAD WEAPON IS DESIGNED TO PERFORM THREE FUNCTIONS AS A CLOSE-QUARTER DEFENSE WEAPON. IT IS USED AS A PALM-SIZE SCATTERGUN; AS A WHIP (THE BREECHBLOCK DANGLING AT THE END OF A CORD IS HEAVY ENOUGH TO INFLICT PARALYZING BLOWS TO THE HEAD OR OTHER VITAL POINTS); OR AS A KNUCKLE DUSTER USING EITHER A ROUND- OR SPIKE-TYPE END.*

SYSTEM OF OPERATION:

LOADING:

To load the weapon, simply lower the unloading lever like the Winchester lever-operated rifles to disengage both the upper and lower lock bolt of the breechblock. Now pull out the breechblock by pulling the cord or chain attached to it to clear it out from the receiver tubing. The chamber is then ready to be loaded.

After loading the cartridge in the chamber, insert the breechblock in the receiver and pull the lever back against the receiver tubing to lock the breechblock to the receiver tubing. Make sure that the bolt lock is aligned with its corresponding hole in the receiver tubing. Note: Before inserting the breechblock into the receiver tubing once a cartridge has been loaded, make sure that the firing pin tip is not protruding on the breech face. This may cause accidental discharge when you close the breech.

To put the weapon on "safe" during loading and unloading, simply turn the firing pin screw head counter clockwise until the tip clears the surface of the breechblock. When the tip of the firing pin is not protruding, the weapon can be carried loaded.

To fire the weapon, simply pull the cocking ring screwed at the front end of the barrel. As soon as the distance of pull clears the length of the sear tip, push the end of the receiver tubing. The weapon is now cocked so that the tip will protrude to a precise length on the breech face surface.

The unloading lever hook must be gripped firmly against the receiver tube to give the breech lock bolt rigid connection to the receiver tubing before the trigger is pressed to fire. The heavy spring surrounding the barrel will slam back the barrel causing the cartridge to be fired once it hits the firing pin.

EXTRACTION:

When cleaning the breechblock after unloading the weapon, simply push the empty shell with your finger. The weapon is now ready to be reloaded.

NOTE ON MATERIALS AND CRITICAL POINTS:

If possible, use only the best materials. The barrel especially must be fully machined and heat-treated according to load standards.

Noting that the weapon uses a shotgun shell, bear in mind that safety must come first. The system is a blowback ignition system and has no positive lock during ignition. Therefore it is necessary that parts, especially the breechblock, must fit firmly inside the receiver tubing. This will prevent sparks coming out the rear of the weapon.

Both breechblock lock bolts must be heat-treated since they hold the breechblock against the backward pressure of the shell during ignition.

Never use magnum loads in this weapon. If practical to handload, use lower loads only since this weapon is designed

purely as a close-quarter scattergun. The .410 caliber shell is safer to use than the big 12 or 16 gauge shell.

Remember, good materials, a good fit, and good heat treatment of all parts is required to get a reasonably good piece of equipment.

PARTS LIST:

1. *Breechblock–upper lock bolt*
2. *Firing pin*
3. *Barrel–machined-type*
4. *Barrel thrust spring–heavy-type*
5. *Front receiver tube nut*
6. *Cocking ring for barrel*
7. *Cord or fine chain mount*
8. *Upper lock bolt spring*
9. *Spring stop pin*
10. *Breechblock–lower lock*
11. *Lower lock pin*
12. *Pair for Part #7*
13. *Unloading lever*
14. *Sear pin–roll pin-type*
15. *Tripper*
16. *Sear*
17. *Trip pin*
18. *Unloading lever axis pin*
19. *Knuckle duster spike–or round-type*
20. *Unloading lever base mount–screwed on and brazed or silver-soldered permanently*
21. *Receiver tubing*

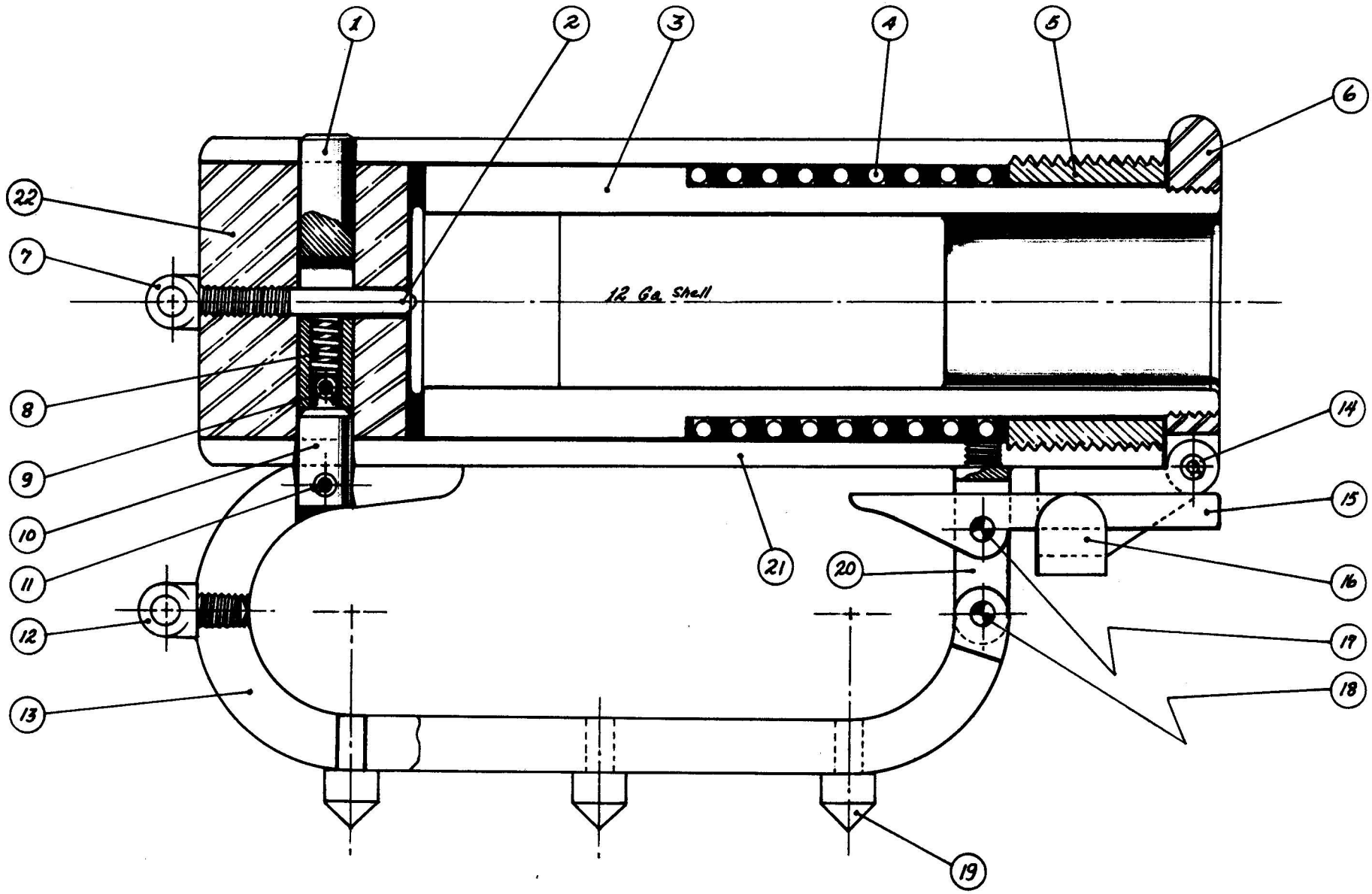

CUTAWAY DIAGRAM

Scale: 2X

Copyright 1982 by Paladin Press

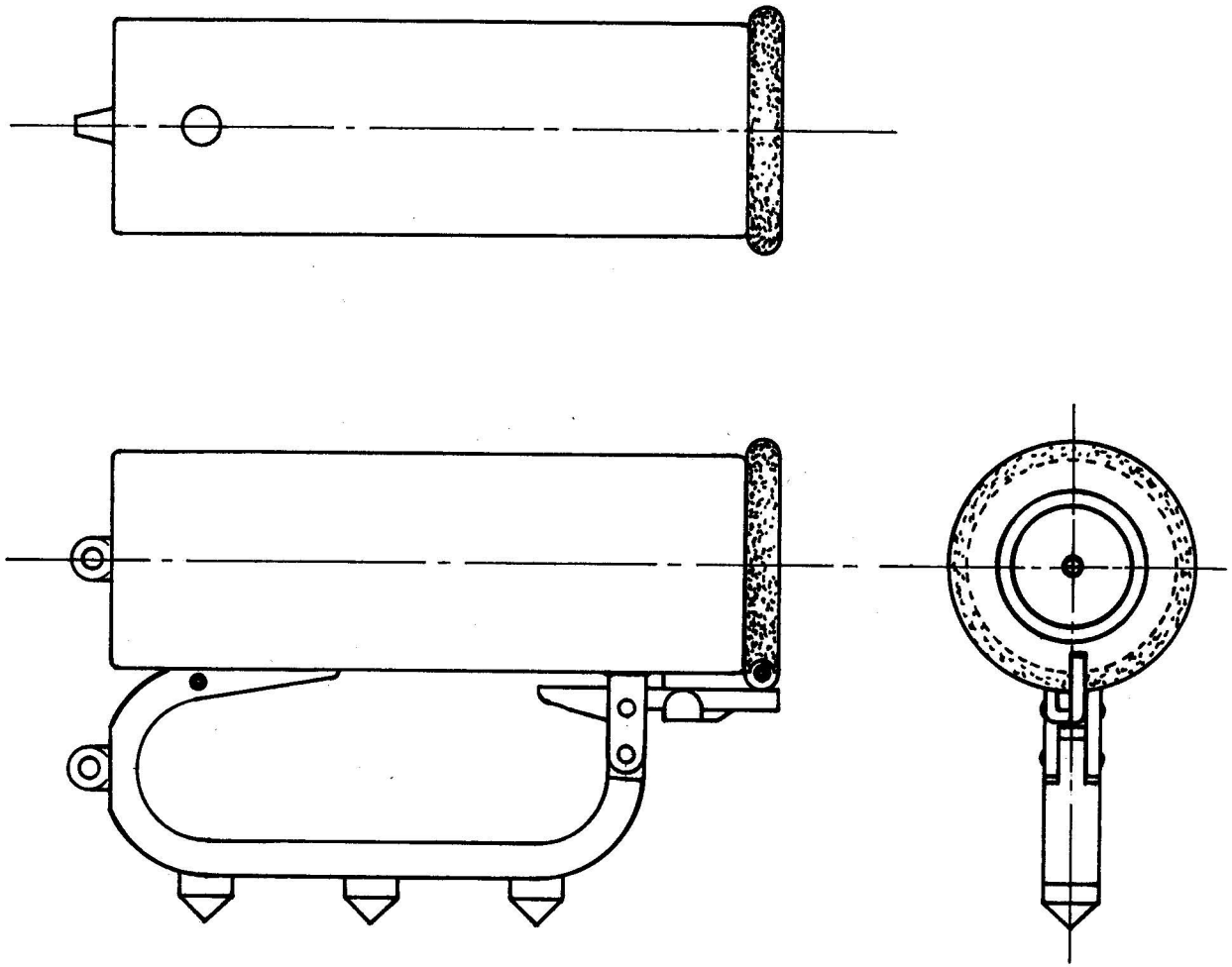

TRIAD SYSTEM

Scale: FULL

AS A BLASTER SHOTGUN

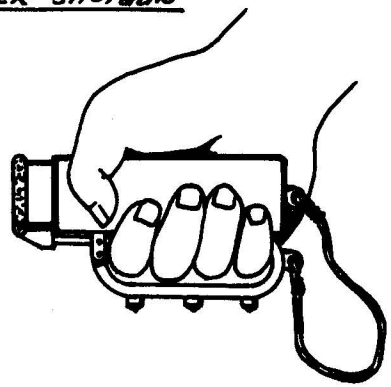

AS A WHIP

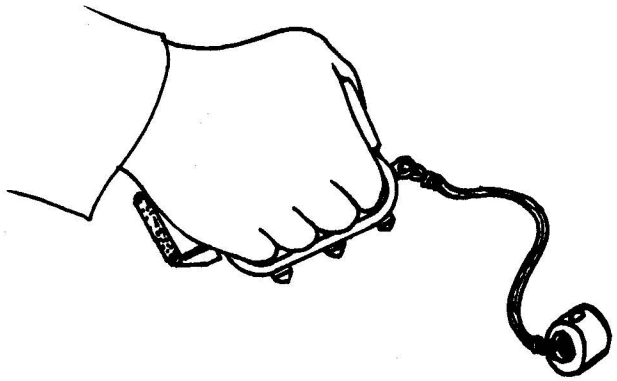

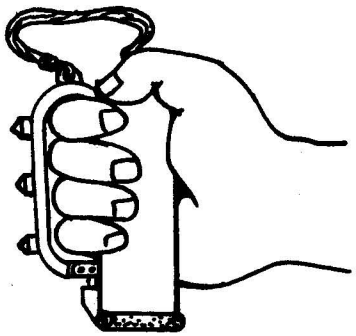

AS A KNUCKLE DUSTER

Copyright 1982 by Paladin Press

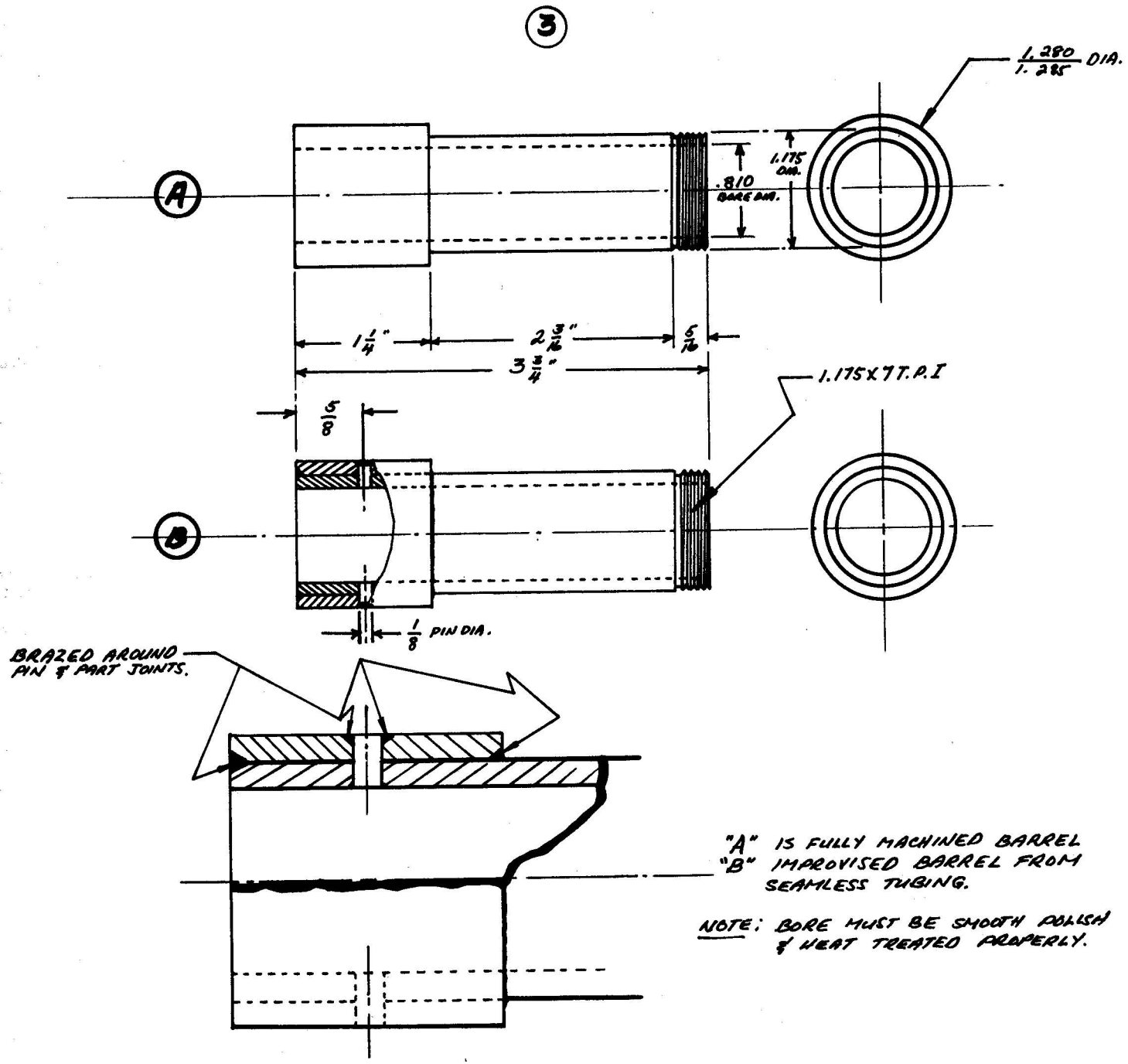

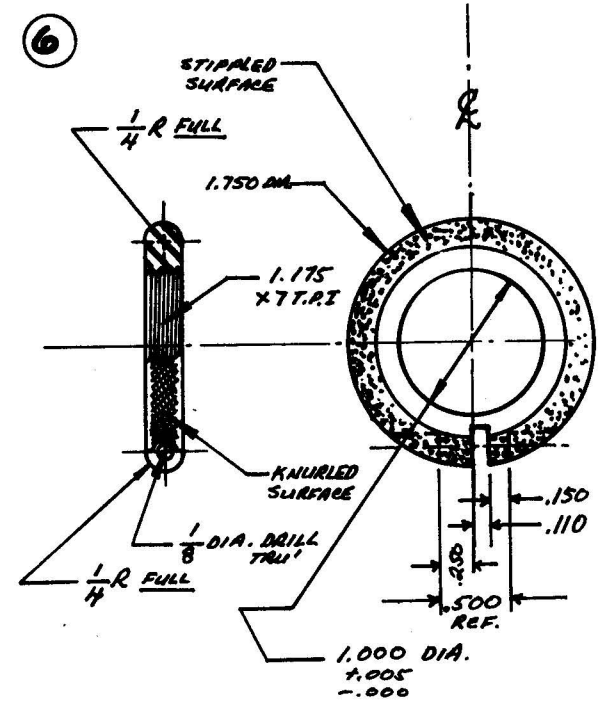

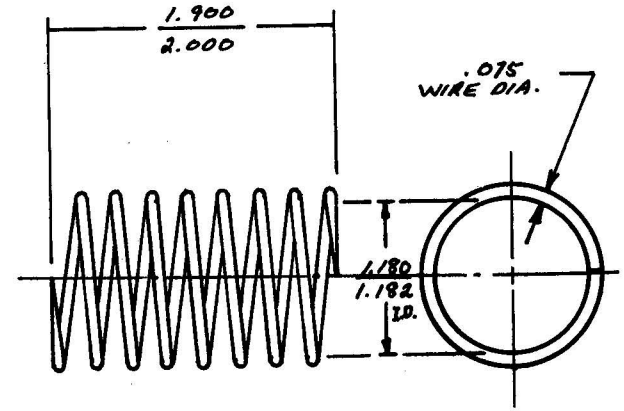

4

MUSIC WIRE SPRING - STRESS RELIEVE AFTER FORMING.

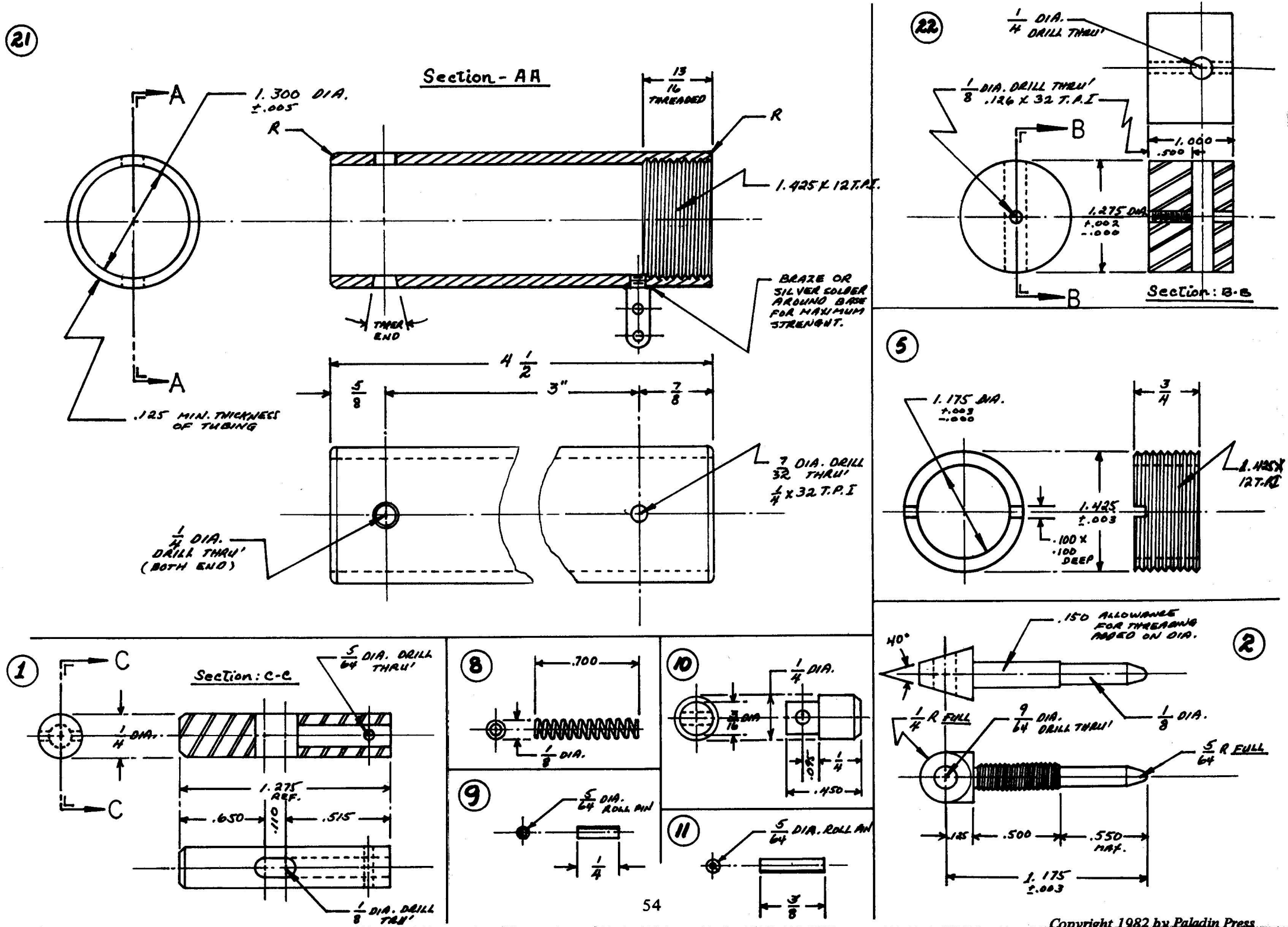

Copyright 1982 by Paladin Press

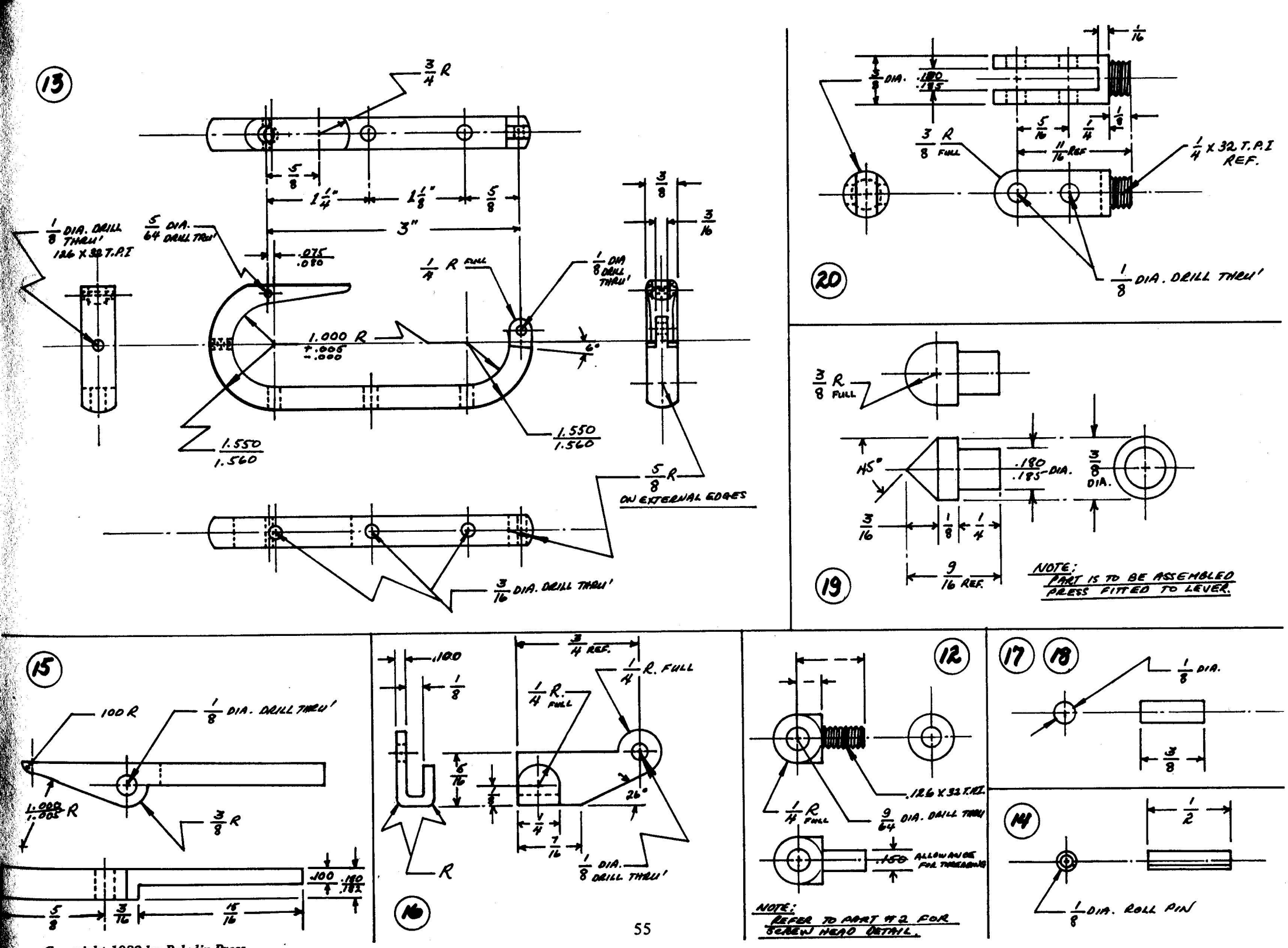

Copyright 1982 by Paladin Press

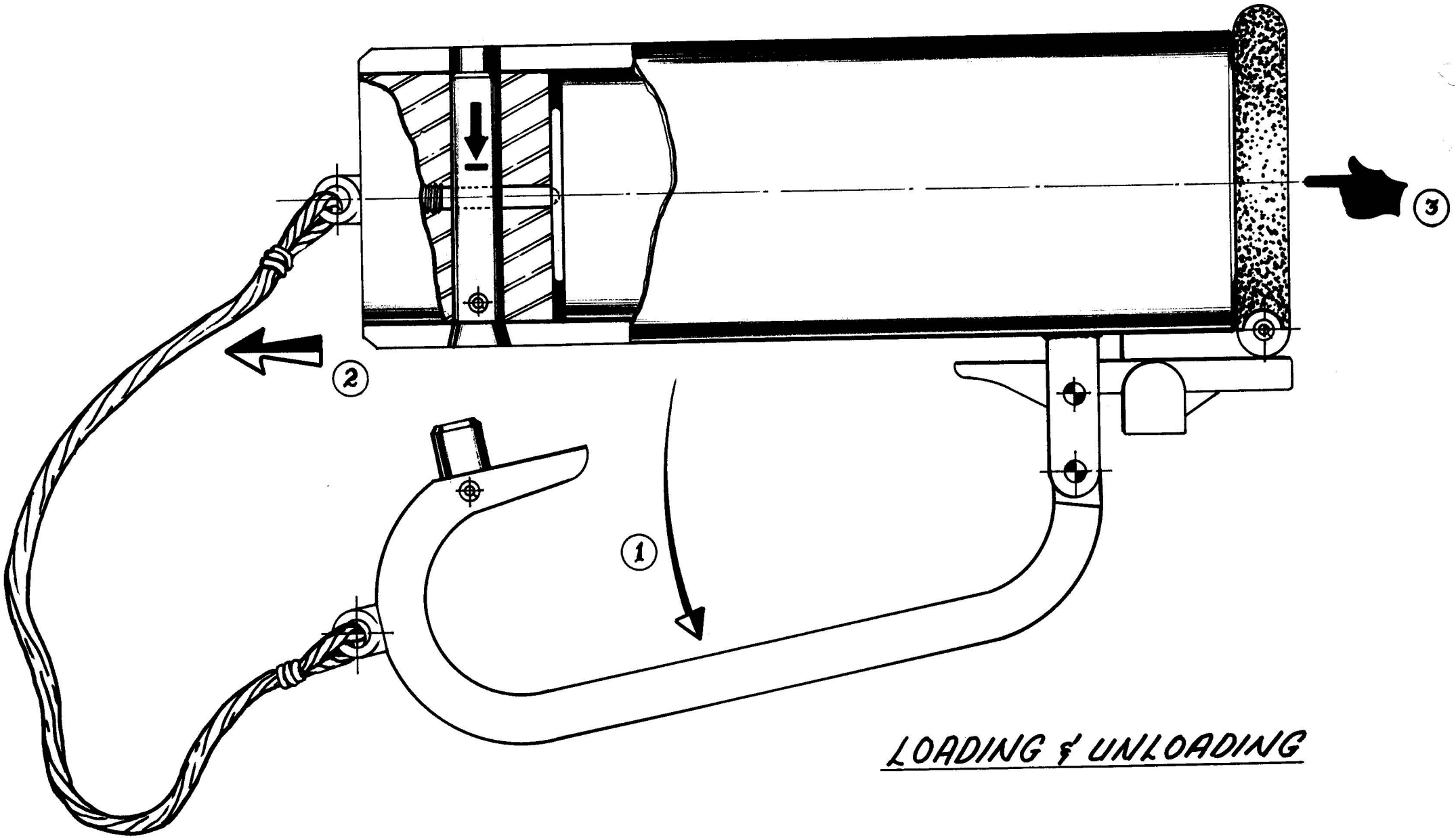

LOADING & UNLOADING

Copyright 1982 by Paladin Press

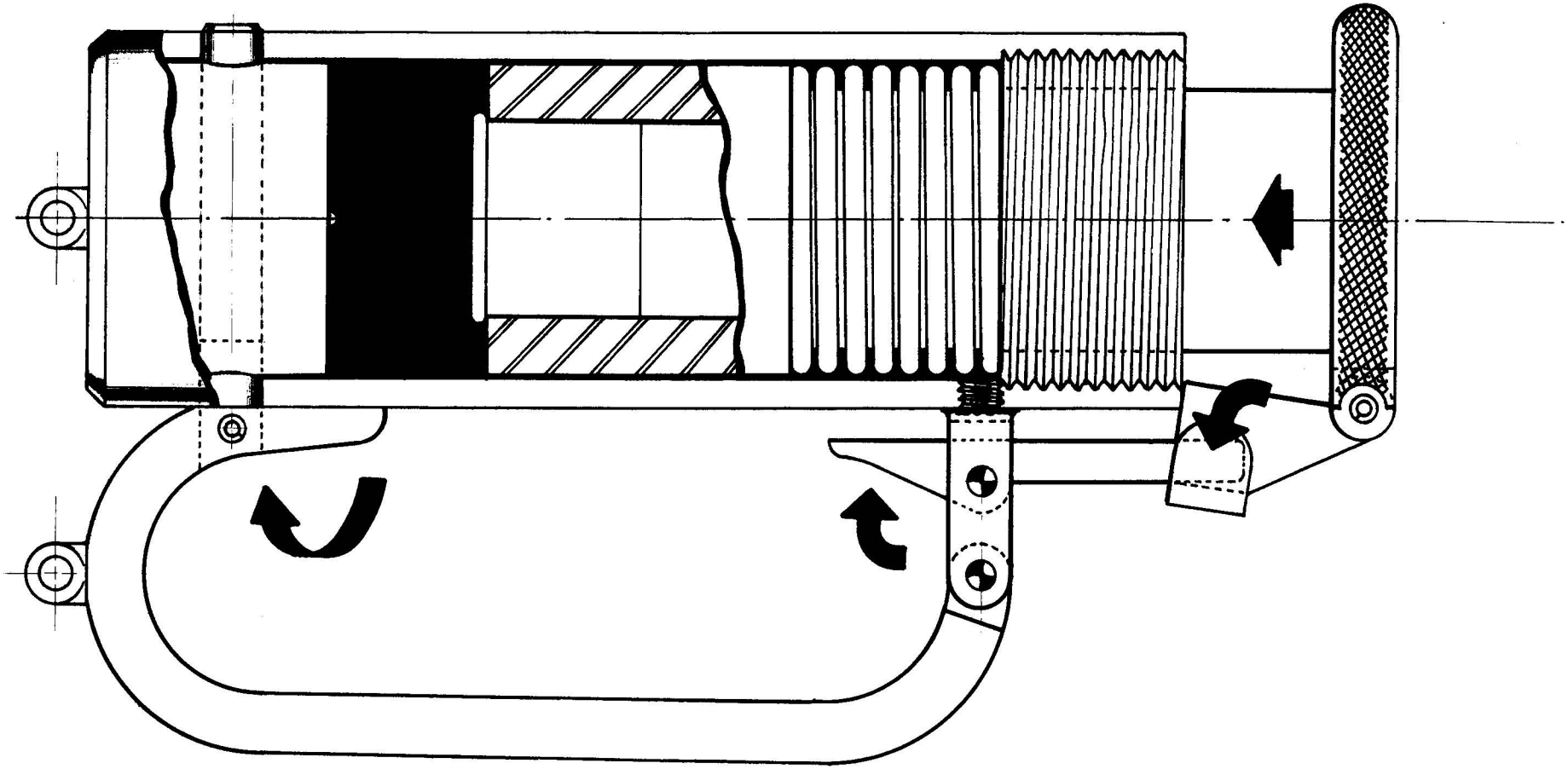

WEAPON IS COCKED - READY TO FIRE

Copyright 1982 by Paladin Press