FIREARM BLUEPRINTS "reduced on CD"

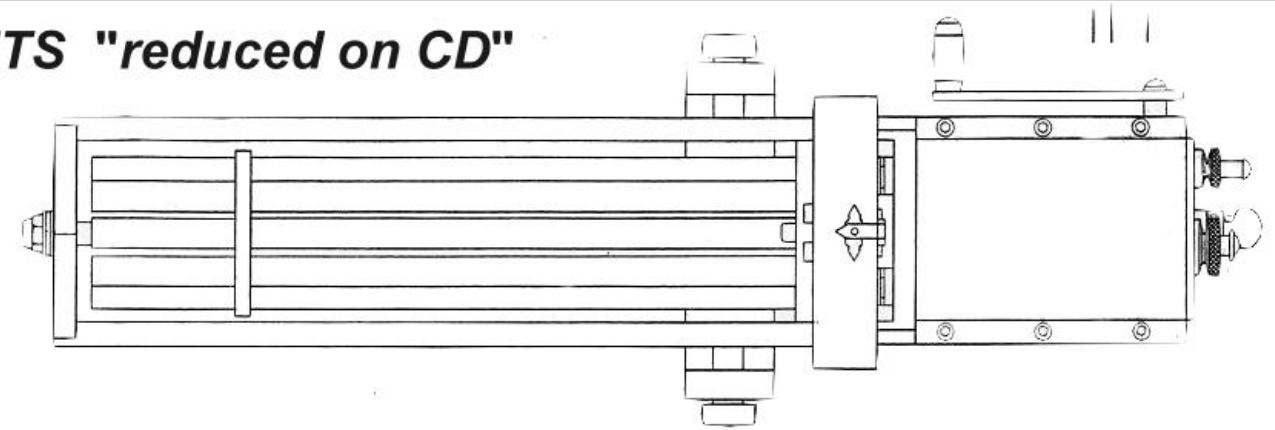

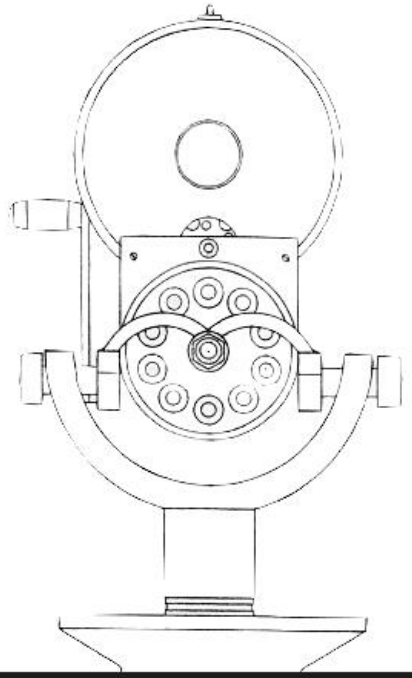

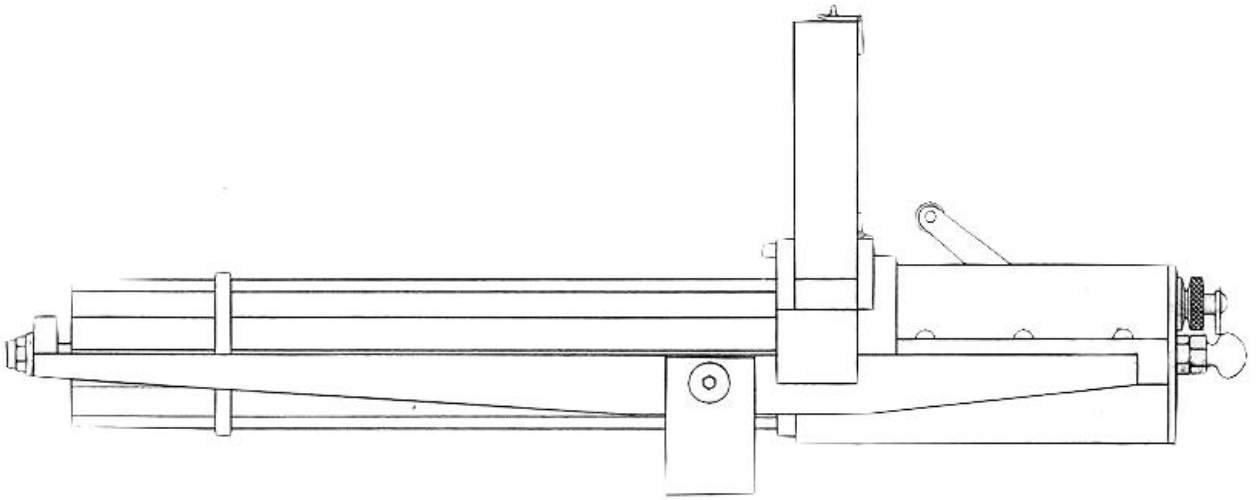

TABLE OF CONTENTS

	BASIC THEORY
	POSTER PRINT
48-0	THEORY AND FINAL ASSEMBLY
48-1	CARRIER BLOCK
48-2	REAR BARREL PLATE
48-3	FRONT BARREL ASSEMBLY
48-4	RIFLED BARREL ASSEMBLY
48-5	MAIN SHAFT
48-6	FRAME ASSEMBLY
48-7	SPACER TUBE
48-8	BOX CAM
48-9	BREECH CASING
48-10	COCKING RING INNER
48-11	COCKING RING OUTER
48-12	COCKING PLATE
48-13	COCKING SWITCH DETAILS
48-14	MAIN RECOIL PLATE
48-15	RECOIL PLATE ASSEMBLY
48-16	DRIVE GEAR
48-17	CRANK DETAILS
48-18	CRANK ASSEMBLY
48-19	BREECH BACK PLATE
48-20	BOLT DETAILS
48-21	BOLT ASSEMBLY
48-22	BOLT EXTRACTOR
48-23	MAGAZINE BASE ASSEMBLY
48-24	MAGAZINE DETAILS
48-25	DRUM MAGAZINE ASSEMBLY
48-26	REAR MAIN SHAFT NUTS
48-27	BOX CAM TEMPLATE
48-28	YOKE MOUNT
48-29	FEED ARM

BASIC THEORY

DRAWING RG-G 48 IS MOSTLY INTENDED AS A POSTER PRINT TO HANG IN YOUR HOBBY ROOM OR WORKSHOP. IT MAY ALSO BE USED AS A DART BOARD DURING POSSIBLE PERIODS OF FRUSTRATION WHILE MAKING THESE PLANS.

DRAWING 48-0 IS A CUTAWAY ASSEMBLY DRAWING TO HELP WITH FINAL ASSEMBLY AND HELP EXPLAIN HOW THE GUN OPERATES. DESC. 48-0 EXPLAINS THE ASSEMBLY.

ON DRAWING 48-0, THREE BOLTS, OR LOCKS, ARE SHOWN AT KEY POSITIONS. THE TOP BOLT IS FULLY TO THE REAR FOR LOADING OF A NEW CARTRIDGE FROM THE TOP. THE CAM FOLLOWER PIN IS CLEARLY SHOWN IN THE BOX CAM TRACK. AS THE ASSEMBLY ROTATES WITH THE TURN OF THE CRANK, THE ANGLED SLOT GUIDES THE FOLLOWER PIN FORWARD, PUSHING THE BOLT IN AND LOADING THE CARTRIDGE.

THE BOLT IN THE CENTER IS JUST APPROACHING THE COCKING SWITCH SEGMENT WHERE THE FIRING PIN SEAR (ROUND SCREW HEAD) IS ABOUT TO BE CAPTURED BY THIS SHORT SEGMENT. IF THE COCKING SWITCH HAD BEEN PULLED REARWARD AND HELD BY THE COCKING SWITCH KNOB, THE SEAR WOULD PASS BY WITHOUT ENGAGING THE RINGS AND THE BOLT WOULD CYCLE WITHOUT COMPRESSING THE FIRING PIN SPRING AND THUS NOT "SNAP" THE FIRING PIN.

THE BOLT AT THE BOTTOM IS PUSHED FULLY FORWARD, HAVING CHAMBERED THE ROUND AHEAD OF IT. NOTE THAT THE FIRING PIN SEAR IS STILL ENGAGED BY THE COCKING RINGS. WITH THE BOLT FULLY FORWARD, AND THE SEAR RETAINED REARWARD BY THE RINGS, THE FIRING PIN SPRING IS FULLY COMPRESSED. AT BOTTOM DEAD CENTER, THE SEAR SLIPS THROUGH THE RELEASE HOLE IN THE RINGS AND IS DRIVEN FORWARD BY THE SPRING, STRIKING THE FIRING PIN AND DISCHARGING THE ROUND.

AS ROTATION OF THE ASSEMBLY CONTINUES, THE BOX CAM PULLS THE BOLT REARWARD AGAIN, THUS EXTRACTING THE EMPTY CASE. THE EMPTY CASING EXITS THROUGH THE CUT-OUT IN THE SIDE RAIL AND THE PROCESS STARTS AGAIN.

NOTE ALSO THAT THE REAR OF THE BOLT ASSEMBLY IN THE BOTTOM POSITION IS SECURELY AGAINST THE UPPER SURFACES OF THE COCKING RING SEGMENTS TO HOLD THE BOLT CLOSED AND ABSORB THE RECOIL. THE BOX CAM AND COCKING RINGS ARE SECURED TO THE FRAME, BUT THE BARREL AND BREECH ASSEMBLY CAN BE MOVED FORWARD OR BACKWARD BY LOOSENING THE NUT AT ONE END OF THE MAIN SHAFT AND TIGHTENING THE ONE AT THE OTHER END. THIS, IN FACT, WAS HOW HEADSPACE WAS ADJUSTED IN THE ORIGINAL GUNS.

PIECE OF CAKE!

ALL THE ENSUING AGONY CONTAINED IN THE FOLLOWING PRINTS AND DESCRIPTIONS SHOULD PRODUCE THE INDIVIDUAL PARTS YOU NEED TO ASSEMBLE THIS CLASSIC.

THE FIRST STEP IS TO BE SURE YOU HAVE ALL THE PLANS AND UNDERSTAND HOW THEY ARE ARRANGED.

YOU SHOULD HAVE ELEVEN 22" X 34" DRAWINGS. EIGHT OF THESE CONTAIN YET SMALLER DRAWINGS MARKED BY HEAVY DOTTED LINES. THESE HAVE BEEN GENERALLY GROUPED TO KEEP SUB-ASSEMBLIES AND RELATED DETAILS CLOSE TO EACH OTHER. THE ORIGINAL DRAWINGS ARE STANDARD MECHANICAL A, B, C & D SIZES DRAWN FULL SCALE. THEY MAY BE CUT AND SEPARATED ALONG THE HEAVY DOTTED LINES IF DESIRED. THERE SHOULD BE 29 TOTAL DRAWINGS, EACH WITH A TITLE AND NUMBER. THERE SHOULD BE A CORRESPONDING PRINTED SHEET WITH A TITLE AT THE TOP BEGINNING WITH DESC. AND A NUMBER MATCHING THE TITLE AND PART NUMBER FOR EACH DRAWING

THESE DRAWINGS WERE DONE IN FULL SCALE EXCEPT FOR THE BOLT WHICH IS 3 TIMES ACTUAL SIZE.

DRAWINGS SHOULD NEVER BE SCALED FOR PRODUCTION PURPOSES, BUT CARE WAS TAKEN TO KEEP THINGS PROPORTIONAL. ACTUAL PARTS SHOULD VISUALLY MATCH THE DRAWINGS. IF THEY DON'T, ONE OF US HAS PROBABLY MADE A MISTAKE.

USE THE WRITTEN PAGES TO CLARIFY THE DRAWINGS, NOT THE OTHER WAY AROUND!

RECOMMENDED MATERIALS SHOW FINISHED LENGTHS SO EXTRA STOCK WILL BE REQUIRED FOR CLEAN UP.

FINAL ASSEMBLY

RECOMMENDED MATERIAL:

1) ALL PARTS & ASSEMBLIES 48-1 THROUGH 48-28
2) THRUST BEARINGS, TORRINGTON #NTA-512 (QTY. 3)
3) THRUST WASHERS, TORRINGTON #TRA-512 (QTY. 6)
4) JAM NUTS 3/8-24 (QTY. 5)
5) DOWEL PIN - 3/32" X 5/8" LONG
6) SPRING .015 DIAMETER MUSIC WIRE 1/8" O.D. X 1" LONG
7) SET SCREW 8-32 X 1/4" LONG

THE PURPOSE OF THIS ASSEMBLY IS TO FINISH THIS PROJECT SO YOU CAN GET BACK TO WHATEVER IT WAS THAT YOU WERE SUPPOSED TO BE DOING.

SLIP THE MAIN SHAFT THROUGH THE CARRIER BLOCK AND FRONT BARREL PLATE ASSEMBLY. BE SURE TO ALIGN THE DOWEL PIN HOLES. SLIDE THE SPACER TUBE OVER THE HEX SHAFT FOLLOWED BY THE FRONT BARREL PLATE. BE SURE THE SMALL SLOT IN THE MAIN SHAFT IS TO THE REAR OF THE CARRIER BLOCK. SECURE THIS ASSEMBLY AT BOTH ENDS, USING THE 3/8-24 JAM NUTS. TIGHTEN -- LOCK TIGHT WOULDN'T HURT.

SLIP THIS ASSEMBLY THROUGH THE FRONT BUSHING IN THE FRAME. SLIP ON THE THRUST BEARING SANDWICHED BETWEEN THE TWO THRUST WASHERS AND THREAD ON THE END 5/16-24 NUT.

SLIDE THE BREECH CASING ASSEMBLY ONTO THE BACK OF THE FRAME UNTIL THE BRASS SIDE BARS BUTT TIGHT TO THE END OF THE FRAME. USING THE HOLES IN THE BRASS SIDE BARS AS GUIDES, MATCH DRILL AND TAP THE SIX 8-32 CASING BOLT HOLES INTO THE FRAME SIDE RAILS.

SLIP THE RECOIL PLATE ASSEMBLY INTO THE BACK OF THE BREECH CASING AND SECURE, USING THE 2-56 SCREWS WHICH ARE TAPPED INTO THE BOX CAM. INSTALL THE THRUST BEARING BETWEEN TWO THRUST WASHERS OVER THE MAIN SHAFT AND INTO THE COUNTERBORE IN THE BACK OF THE RECOIL PLATE. PUSH THE 1/8" DIAMETER SPRING INTO THE HOLE IN THE END OF THE MAIN SHAFT AND COMPRESS IT INTO THE BOTTOM OF THE HOLE ENOUGH TO SLIP THE 3/32 DOWEL PIN INTO THE SLOT IN THE SHAFT. THE SPRING SHOULD PUSH THE PIN TOWARD THE REAR. IF THE SLOT IS NOT VISIBLE, THE BARREL ASSEMBLY CAN BE PUSHED BACK TO UNCOVER IT. THE HOLE IN THE BACK OF THE SHAFT CAN BE PLUGGED USING THE 8-32 SET CREW. SLIDE THE MAIN GEAR ASSEMBLY, NOTCH FORWARD, ONTO THE MAIN SHAFT AND ROTATE UNTIL THE DOWEL PIN ENGAGES THE NOTCH.

HOLD THE CRANK ASSEMBLY SO THAT THE TWO GEARS FIRMLY MESH OR ENGAGE. USING THE HOLES IN THE CRANK BLOCK AS GUIDES, MATCH DRILL AND TAP THE TWO 2-56 HOLES AND SECURE THE CRANK ASSEMBLY WITH THE SCREWS.

REMOVE THE COCKING SWITCH KNOB, BUT LEAVE THE SPRING ON THE SWITCH SHAFT. SLIDE THE BREECH BACK PLATE OVER THE MAIN SHAFT AND COCKING SWITCH SHAFT. INSTALL THE THRUST BEARING ASSEMBLY AND SECURE WITH BRASS JAM NUT AND "KNOB" NUT AT THE END.

INSTALL THE CRANK ARM OVER THE CRANK SHAFT. GO AHEAD! TURN THE CRANK CLOCKWISE AS VIEWED FROM THE CRANK ARM SIDE. THE BARREL ASSEMBLY SHOULD TURN VERY SMOOTHLY.

RE-ATTACH THE COCKING SWITCH KNOB. BE SURE IT PULLS BACK FAR ENOUGH TO TURN AND REMAIN OUT WITH THE PINS AGAINST THE BACK BREECH PLATE. SHORTEN THE SPRING, IF REQUIRED.

NOW, INSERT ONE BOLT ASSEMBLY, GUIDING WITH YOUR FINGER FROM THE REAR AND FROM THE BREECH SIDE. TURN THE BARREL ASSEMBLY BY HAND, CLOCKWISE VIEWED FROM THE BACK OF THE GUN. KEEP THE COCKING SWITCH LOCKED BACK. AS THE BOLT NEARS BOTTOM DEAD CENTER, IT WILL STRIKE THE CORNERS OF THE UPPER STEP ON THE COCKING RINGS. AS SHOWN ON THE DRAWING 48-12, THESE CORNERS WILL HAVE TO BE ROUNDED TO ALLOW THE BOLT PLUG TO SLIP UP ON THEM. I COULD FIND NO WAY TO PRE-DIMENSION THIS AND MAKE IT WORK! LEAVE THE FRONT AND REAR MAIN SHAFT NUTS LOOSE SO THE BARREL ASSEMBLY CAN MOVE FORWARD AND BACKWARD A LITTLE. THE BOLT, REMEMBER, IS LOCKED IN POSITION BY THE BOX CAM, BUT THE BARREL/BREECH ASSEMBLY CAN MOVE BACK AND FORTH. THE OBJECT HERE IS TO GET THE REAR OF THE BOLT UP ON THE COCKING RING STEP WHEN THE BREECH IS FULLY BACK AGAINST THE FACE OF THE BOLT, THUS FULLY CLOSING THE CHAMBER AND "TRAPPING" THE BOLT BETWEEN THE COCKING RING STEP AND BREECH FACE – ALL AT BOTTOM DEAD CENTER! THIS IS WHY THE COCKING RINGS WERE NOT YET HARDENED. SEE THE DETAILS AND NOTES ON ASSEMBLY 48-0 FOR THE BOLT IN THE BOTTOM POSITION. THE TRAILING CORNERS ON THE COCKING RING STEPS WILL ALSO HAVE TO BE ROUNDED TO GET THE BOLT BACK OFF THE STEP. THIS IS A TIME-CONSUMING ORDEAL BECAUSE OF ASSEMBLY, DIS-ASSEMBLY, RE-ASSEMBLY, ETC. USING MAGIC MARKER ON THE STEP CORNERS WILL HELP YOU SEE WHERE THE BOLT IS STRIKING THEM AND WHERE TO FILE OR

GRIND. ONCE ONE BOLT WORKS, ALL THE REST SHOULD FIT, SINCE THEY WERE ALL MACHINED TO THE SAME LENGTH.

ENGAGE THE COCKING SWITCH AND ROTATE THE ASSEMBLY TO ENSURE THAT THE SEAR ENGAGES IT. INSTALL THE BOLTS, MATCHING BOLT NUMBERS TO CHAMBER NUMBERS. INSTALL THE BOLT EXTRACTOR WITH THE LAST BOLT AND CYCLE THE GUN SLOWLY, NOTING ANY TIGHT SPOTS. WITH THE COCK SWITCH REARWARD (DISENGAGED), THE GUN AND ITS BOLTS SHOULD CYCLE FAIRLY SMOOTHLY.

A FAIR AMOUNT OF HAND "TUNING" WILL BE REQUIRED TO LOCATE AND FIX ROUGH SPOTS. TURNING THE GUN BY WRAPPING YOUR HANDS AROUND THE BARREL ASSEMBLY WILL TAKE THE LOAD OFF THE CRANK ARM AND PREVENT YOU FROM SHEARING THE SMALL PIN DRIVING THE CRANK GEAR. THE BARREL ASSEMBLY SHOULD BE TURNED CLOCKWISE AS VIEWED FROM THE BACK OF THE GUN. LEAVE THE COCKING SWITCH DISENGAGED SO YOU DON'T FEEL THE ADDED DRAG FROM COMPRESSING THE FIRING PIN SPRINGS WHICH COULD "HIDE" TIGHT SPOTS.

REMEMBER THAT THE BARREL AND BREECH ASSEMBLY CAN MOVE BACK AND FORTH. IF IT IS TOO FAR REARWARD, THE BOX CAM WILL BE TRYING TO FORCE THE BOLT ASSEMBLY INTO THE BREECH. POSITION THE BARREL ASSEMBLY SUCH THAT THE BOLT FACE JUST REACHES THE BREECH WITHOUT BINDING UP THE CAM PIN IN THE BOX CAM. LOCK IT IN THAT POSITION USING THE JAM NUTS AT EACH END OF THE MAINSHAFT.

IF DESIRED, THE COCKING RINGS AND SWITCH MAY NOW BE DISASSEMBLED AND HEAT TREATED.

THE "YOKE" TYPE MOUNT ISN'T VERY FANCY, BUT I WAS IN A HURRY AT THIS POINT JUST TO MAKE IT STAND UP BY ITSELF. RESEARCH WILL HAVE TO BE DONE ON AUTHENTIC MOUNTINGS, DEPENDING ON WHETHER YOU WANT CIVIL WAR DETAIL OR TO MOUNT IT ON THE HOOD OF YOUR JEEP.

I HAD ALL THE EXTERNAL STEEL PARTS DONE IN BLACK OXIDE AND POLISHED THE BRASS. YOUR CHOICE!

CARRIER BLOCK

RECOMMENDED MATERIAL:

1) BRASS 2-3/4" DIAMETER ROUND STOCK X 3" LONG

THIS PIECE ALONG WITH THE FRONT AND REAR BARREL PLATES WILL BE THE FOUNDATION FOR THE 10 BARREL CLUSTER ASSEMBLY.

THE SECRET SUGGESTED HERE IS TO MAKE THESE THREE PARTS TOGETHER AS A "SANDWICH" SO THAT EVERYTHING LINES UP. TURN AND FACE THE THREE PARTS. FORM THE COUNTER-BORE IN THE BRASS CARRIER BLOCK AND MATCHING LOCATING BOSS (CLOSE SLIP FIT) ON THE FRONT BARREL PLATE. DRILL THROUGH ALL THREE FOR A SLIP FIT ON A 3/8" DIAMETER BY 3-1/2" LONG SHOULDER BOLT. DRILL AND INSERT THE 3/16" DOWEL THROUGH ALL THREE. IT IS SUGGESTED THAT THE TWO BARREL PLATES BE REAMED FOR A .0005 SLIP ON THE PIN AND THE CARRIER FOR A .0005 PRESS. THIS WILL RETAIN THE PIN IN THE CARRIER BLOCK FOR FUTURE RE-ALIGNMENT EASE. BOLT THE THREE TOGETHER WITH THE SHOULDER BOLT AND HEAD FOR THE ROTARY TABLE ON THE MILLING MACHINE. DRILL THE TEN 1/4" DIAMETER HOLES PER PRINT THROUGH ALL THREE PIECES. DISASSEMBLE THE "SANDWICH" AND FINISH DRILLING, TAPPING, AND REAMING EACH TO PRINT. BE SURE WHEN MILLING THE 10 FLATS THAT ALL HOLES ARE FIRST DRILLED AND THAT THE FLATS UNCOVER EXACTLY 1/2 OF THE REAMED .272 HOLES. TURN DOWN THE REAR OF THE BLOCK TO THE 2.500 DIAMETER ONLY AFTER ALL FINISH DRILLING AS THE WALL THICKNESS FROM THE O.D. TO THE HOLES WILL BE RATHER THIN. IT IS <u>STRONGLY</u> SUGGESTED THAT NUMBERS 1 THROUGH 10 BE STAMPED UNDER EACH HOLE ON THE REAR OF THE CARRIER BLOCK TO IDENTITY INDIVIDUAL CHAMBERS.

<u>PIN THE THREE BACK TOGETHER BEFORE</u> BROACHING THE 3/8" HEX HOLE. BROACH THEM TOGETHER TO INSURE THAT THE HEX FLATS IN EACH MATCH THE BARREL HOLES.

REAR BARREL PLATE

RECOMMENDED MATERIAL:

1) MILD STEEL ROUND STOCK 2-3/4" DIAMETER X .475" THICK

THIS PLATE PROVIDES THE BASE FOR SCREWING IN THE TEN BARRELS AND THE DRIVE COGS FOR THE MAGAZINE FEED WHEEL.

FOLLOW ALL INSTRUCTIONS ON DESC. 48-1 AND THE PRINT.

AFTER DRILLING AND TAPPING THE 7/16-20 THREADS, MILL TEN 1/8" WIDE SLOTS ON CENTER AT THE TOP OF EACH HOLE. MAKE THEM PER PRINT .100" DEEP AND 1/16" LONG. THESE WILL LINE UP LATER WITH A SIMILAR SLOT IN THE BARRELS TO PROVIDE CLEARANCE FOR THE SHELL EXTRACTORS.

DRILL AND LOCATE THE TEN 1/8" PINS ON CENTER WITH THE TAPPED HOLES. YOU MIGHT WANT TO USE SOFT STEEL PINS BECAUSE IF THEY BREAK INTO THE 7/16-20 THREADS, YOU WILL HAVE TO RETAP AND HARD DOWEL PINS DO NOT TAP EASILY.

MILL THE CUT OUTS AROUND THE OUTSIDE AS SHOWN ON THE PRINT. BE SURE TO CUT ON THE SIDE CONTAINING THE 1.000" TURN DOWN AND GET CLOSE UP TO THE RIGHT-HAND SIDE OF THE COG PIN. THE CUT OUTS ARE 1/8" DEEP AND ARE NECESSARY TO PROVIDE CLEARANCE FOR THE DRIVE PINS ON THE MAGAZINE FEED WHEEL.

FRONT BARREL PLATE

RECOMMENDED MATERIAL:

1) MILD STEEL ROUND STOCK 2-3/4" DIAMETER X 1/4" THICK

FOLLOW ALL INSTRUCTIONS ON DESC. 48-1 AND, OF COURSE, THE PRINT.

RIFLED BARREL ASSEMBLY

RECOMMENDED MATERIAL:

1) ROUND MECHANICAL TUBING, CARBON STEEL 1/2" O.D. X .310 I.D. X 12" LONG (QTY. 10)

* 2) .22 CAL. BARREL LINER 5/16" O.D. X 24" LONG (QTY. 5)

THIS IS A NICE TOUCH OF DETAIL THAT'S EASY TO DO.

THE 24" LINER SLEEVES USUALLY HAVE ENOUGH SCRAP ON EACH END TO PRODUCE TWO 12" BARRELS. YOU MIGHT WANT TO CHECK THIS BEFORE BUYING.

1/2" O.D. X .310 I.D. MECHANICAL TUBING IS STANDARD STOCK.

THE .310 DIAMETER CAN BE REAMED OUT IN YOUR VISE AT HOME WITH A HAND DRILL PROVIDING YOU HAVE A REAMER LONGER THAN 6". SIMPLY REAM FROM BOTH SIDES. SLIP IN LINER SLEEVES, PLUG BORES TO PROTECT, AND SOLDER EACH END. MOST LINERS COME WITH INSTALLATION INSTRUCTIONS. FOLLOW THOSE. THREAD THE BARRELS TO PRINT. SCREW THEM INTO THE REAR BARREL PLATE UNTIL TIGHT. MARK TOP CENTER AND MILL OR, AS I DID, HAND FILE IN THE EXTRACTOR SLOTS.

SCREW THE BARRELS BACK INTO THE REAR BARREL PLATE AND MAKE SURE THE SLOTS LINE UP. I SOLDERED THE BARRELS TO SECURE THEM. LEAVING THE FRONT BARREL PLATE LOOSELY IN PLACE WILL HELP KEEP THINGS LINED UP.

---

* Available through Dixie Gun Works Catalog, Brownells Catalog or local gun smith supplies

MAIN SHAFT

RECOMMENDED MATERIAL:

1) COLD ROLLED MILD STEEL HEX STOCK 3/8 HEX X 20" LONG

THIS IS STRAIGHT FORWARD WITH NO BIG HINTS OTHER THAN TO PROPERLY SUPPORT THIS DURING MACHINING SO THAT IT RUNS TRUE WHEN YOU ARE DONE.

COLD ROLLED STOCK HAS BETTER TOLERANCES AND FINISH THAN HOT ROLLED. CHECK THAT YOU HAVE A GOOD SLIDING FIT BETWEEN THE HEX STOCK AND YOUR BROACHED HOLES IN THE CARRIER AND BARREL PLATES BEFORE YOU WASTE TIME MACHINING ON THE SHAFT.

FRAME ASSEMBLY

RECOMMENDED MATERIAL:

1) COLD ROLLED MILD STEEL 3/8" X 1" X 18-1/2" (2) PIECES
2) PIPE OR TUBE 2" O.D. X. 1/4" WALL X 3/8" LONG
3) MILD STEEL ROUND STOCK 3/4 O.D. X 3/8" LONG
4) BRONZE BUSHING FOR 5/16" DIAMETER SHAFT BOSTON #B57-3 OR EQUIVALENT

THIS FRAME WILL SUPPORT THE BARREL CLUSTER ASSEMBLY, ITS BEARINGS, THE ENTIRE OPERATING MECHANISM AND, ULTIMATELY, THE WHOLE GUN.

IT IS RECOMMENDED TO WELD THE FRAME TOGETHER BEFORE MILLING AS THE SQUARE SURFACES ARE MUCH EASIER TO HOLD THAN THE ANGLED ONES.

DRILL THE 3/4 STOCK TO PRINT TO ACCEPT THE FRONT BRONZE BUSHING WITH A LIGHT PRESS FIT. LAY THE 3/8" BARS ON EDGE ON A WELDING TABLE AND CLAMP A LONG 3" SPACER BLOCK BETWEEN THEM. USE A "V" BLOCK TO SUPPORT THE ROUND BEARING MOUNT EXACTLY IN THE CENTER OF THE 3" SPACE. USE A STRAIGHT EDGE ACROSS THE TOP OF THE BARS AND SHIM THE "V" BLOCK UNTIL THE BORE OF THE BEARING MOUNT IS ON CENTER WITH THE TOP OF THE SIDE FRAME BARS.

CUT A PIECE FROM THE PIPE RING AND BELT SAND UNTIL A VISUALLY ATTRACTIVE BRIDGE CAN BE MADE BETWEEN THE BEARING MOUNT AND THE SIDE FRAME. MAKE AN IDENTICAL PIECE FOR THE OTHER SIDE. WELD AND MAKE IT PRETTY 'CAUSE THESE PARTS SHOW. DO THE MILL WORK TO PRINT. IT IS RECOMMENDED THAT THE 8 HOLES BE MATCH DRILLED AT FINAL ASSEMBLY 48-0.

SPACER TUBE

RECOMMENDED MATERIAL:

1) ANY STEEL TUBE WITH A 7/16" I.D. TO SLIP OVER 3/8" HEX STOCK

FACE ENDS SQUARE AND TO LENGTH PER PRINT.

BOX CAM

RECOMMENDED MATERIAL:

1) MILD STEEL TUBE 3" O.D. X 2" OR 2-1/4" I.D.

THIS CAM CREATES THE MOVEMENT OF THE BOLTS OUT FOR EJECTION AND IN FOR LOADING.

THIS WAS THE MOST FRIGHTENING, BUT THE HARD PART ENDED UP BEING MADE IN THE BASEMENT WITH A HACKSAW AND FILES.

MACHINE THE TUBE PER PRINT, IGNORING ALL DIAGONAL CAM TRACK LINES. SCRIBE A LINE DOWN THE SIDE OF THE TUBE. BE SURE TO FIT THE O.D. TO A CLOSE SLIDING FIT INTO THE BREECH CASING. THE DIMENSIONS ON THE DRAWING WERE BASED ON THE STOCK I HAD. CUT THE 1/2" WIDE SLOT TO PRINT FOR THE BOLT EXTRACTOR. NOW . . . THIS IS HOW IT WAS DONE. TAKE TEMPLATE 48-27 AND CUT OUT WITH SCISSORS AS INDICATED. CUT CAREFULLY ALONG THE CAM PATH LINE. WRAP THE CUT OUTS AROUND THE MACHINED TUBE, BEING SURE TO LINE UP THE BOTTOM DEAD CENTER (BDC) MARKS WITH THE SCRIBE LINE. SECURELY TAPE OR GLUE THE PAPER TEMPLATE TO THE TUBE. YOU SHOULD HAVE A STEEL TUBE WITH TWO PIECES OF PAPER TAPED TO IT SUCH THAT THERE IS A CONTINUOUS .200 GAP BETWEEN THE TWO PAPERS, SPIRALING AROUND THE TUBE.

USING AN INDELIBLE MARKER, INK IN THE OPEN SPIRAL. PUT IT IN THE VISE AND PULL OUT YOUR TRUSTY HACKSAW. BEGIN HACKING, I MEAN SAWING IN THE MIDDLE OF THE GAP. CUT AS DEEP AS POSSIBLE WITHOUT CUTTING OUTSIDE OF THE GAP ON EACH END OF THE CUT. DON'T TRY TO BEND THE BLADE! RESTART IN MULTIPLE PLACES. CONTINUE UNTIL YOU CAN SEPARATE THE TWO PIECES, REMEMBERING THAT AS LONG AS SOME OF THE ORIGINAL GAP MARK REMAINS, YOU ARE STILL FINE. USING A FILE, HAND GRINDER, ETC., WORK THE JAGGED EDGES DOWN TO THE PROFILE GAP LINE. FINISH ONE PIECE FIRST SO THAT YOU CAN MATCH THE OTHER TO IT. FINAL FINISHING CAN BE DONE BY HOLDING THE PARTS TO THE LIGHT AND SANDING TO ELIMINATE GAPS OR RUBBING THE MATING PARTS TOGETHER USING GRINDING COMPOUND OR CARBON PAPER TO LOCATE THE HIGH SPOTS. FINISH TO A SMOOTH SURFACE.

NOW, THAT WASN'T BAD, WAS IT? THERE ARE CERTAINLY OTHER WAYS TO MAKE THIS PART INCLUDING N.C. PROGRAMMING, BUT IT TOOK ME ABOUT FOUR HOURS TO HAND MAKE.

BREECH CASING

RECOMMENDED MATERIAL:

1) BRASS TUBE 3" O.D. X 1/16" WALL X 6-1/2" LONG
2) BRASS BAR STOCK 3/8" X 3/4" X 4-7/8" LONG - (2) PIECES
3) BOX CAM PART NO. 48-8
4) 2-56 x 3/8" FHMS (QTY. 8)

THIS CASING WILL HOUSE THE ENTIRE FIRING MECHANISM, PROVIDE A MOUNT FOR THE BOX CAM AND REAR BEARING SUPPORT PLATES AND ULTIMATELY FIX THESE ASSEMBLIES TO THE FRAME.

THINGS TO WATCH OUT FOR HERE ARE THE TOLERANCES OF YOUR TUBE STOCK. THE DIAMETERS OF MATING PARTS ARE BASED ON THIS (AND SO NOTED ON THE DRAWINGS) AND ENSURING THAT THE SIDE BRACKETS ARE SQUARE, LEVEL AND ON PROPER CENTER WITH THE CASING TUBE.

IT IS ALSO VITAL THAT THE BOX CAM HALVES BE LOCATED PER PRINT INCLUDING POSITION WITHIN THE TUBE, SPACING BETWEEN THE CAM HALVES AND ALIGNMENT OF BOTTOM DEAD CENTER (BDC) SCRIBE LINES. IT IS SUGGESTED THAT TEMPORARY SPACERS FOR EACH END AND .200 DIAMETER ROD SPACERS TO SEPARATE THE CAM HALVES BE MADE. THE WHOLE THING CAN THEN BE CLAMPED ENDWISE WHILE DRILLING AND TAPPING THE 2-56 HOLES TO SECURE THE CAM HALVES. REMEMBER THE BDC TIMING MARKS! PEEK INSIDE BEFORE DRILLING TO ENSURE THAT YOU DON'T HIT THE CAM PATH WITH THE 2-56 SCREW HOLES. FOUR SCREWS PER CAM SECTION SHOULD DO IT.

REMEMBER THERE ARE TWO DIFFERENT LENGTHS OF SIDE BRACKETS AND EACH MUST BE ON THE PROPER SIDE. YOU ARE ALSO SOLDERING A FLAT PIECE TO A ROUNDED SURFACE. A ROUND FILE CAN BE USED ON THE SOFT BRASS TO CREATE A ROUGHLY CONCAVE SURFACE. IT IS HIGHLY SUGGESTED THAT THE FRAME, 48-6, BE USED AS A FIXTURE. MEASURE TO A STRAIGHT EDGE PLACED ACROSS THE FRAME TO ENSURE THAT THE CASING IS ON PROPER CENTER, BOTH ENDS! A VISE, LIGHTLY CLAMPING THE CASING TUBE BETWEEN THE FRAME SIDES, IS VERY HELPFUL IN POSITIONING ALL THIS. IF SOFT SOLDER IS USED, A COUPLE OF DRILLED AND TAPPED SCREWS THROUGH THE SIDE AS SHOWN ON THE DRAWING WILL ADD STRENGTH. GRIND THE SCREW ENDS SMOOTH ON THE INSIDE.

COCKING RING INNER

RECOMMENDED MATERIAL:

1) HIGH CARBON STEEL ROUND STOCK 2-1/8" O.D. X 1-3/8" LONG, HEAT TREATABLE TO MIN 50 RC

THIS PART, IN COMBINATION WITH THE OUTER COCKING RING, RETAINS THE FIRING PIN SEAR AS THE BOLT IS PUSHED BY THE BOX CAM. IT RELEASES THE SEAR AT BOTTOM DEAD CENTER AT WHICH POINT, THE RING'S UPPER SURFACES BEAR AGAINST THE BOLT TO ABSORB RECOIL.

MACHINE TO PRINT, BUT DO NOT HEAT TREAT, YET!

COCKING RING OUTER

RECOMMENDED MATERIAL:

1) HIGH CARBON STEEL ROUND STOCK 2-1/2" O.D. X 1-3/8" LONG, HEAT TREATABLE TO MIN 50 RC

THIS PART ACTS IN CONJUNCTION WITH THE INNER COCKING RING AS DESCRIBED IN DESC.-10.

MACHINE TO PRINT, BUT DO NOT HEAT TREAT, YET!

COCKING RING PLATE

RECOMMENDED MATERIAL:

1) MILD STEEL ROUND STOCK 2-1/2" O.D. X 1/8" THICK
2) INNER COCKING RING 48-10
3) OUTER COCKING RING 48-11
4) SCREWS 4-40 FH X 1/4" LONG (QTY. 8)

THIS PLATE MOUNTS THE INNER AND OUTER COCKING RINGS.

MACHINE THE CENTER HOLE. THE TOLERANCING IS INTENDED TO ACCURATELY CENTER THE PLATE ON THE MAIN RECOIL PLATE PART NO. 48-14.

CLAMP THE INNER AND OUTER COCKING RINGS, THICK BASE DOWN, AND CENTERED ON THE PLATE. THE RINGS MUST BE CONCENTRIC. LAYOUT, MATCH DRILL, CSK AND TAP THE 4-40 HOLES. SECURE THE RING WITH THE SCREWS. THE SCREW HEADS MUST BE FLUSH OR BELOW THE SURFACE. CUT THE RING SEGMENTS PER PRINT, BUT DO NOT THROW AWAY THE PIECES AS SEGMENTS WILL BE USED TO MAKE THE COCKING SWITCH. A SMOOTH, FLAT FINISH SHOULD BE LEFT ON THE EDGES OF THE RINGS NEAR WHERE THE SQUARE HOLE IS TO BE BROACHED AS THESE WILL GUIDE THE COCKING SWITCH. DRILL AND BROACH THE SQUARE HOLE INSURING ONE SIDE IS FLUSH AND CENTERED WITH THE COCKING RINGS. MACHINE THE SEAR RELEASE HOLE EXACTLY AT BOTTOM DEAD CENTER. THE HEAD OF THE FIRING PIN SEAR WILL SLIP PAST THE RINGS THROUGH THIS HOLE, RELEASING THE COMPRESSED FIRING PIN SPRING. THE REAR OF THE BOLT MUST BE SECURELY POSITIONED ON THE HIGH STEP OF THE RINGS TO HOLD THE BOLT CLOSED AND ABSORB THE RECOIL.

MAKE THE FLAT CUT ACROSS THE TOP OF THE PLATE. IT IS SIMPLY CLEARANCE NEEDED LATER.

COCKING SWITCH DETAILS

RECOMMENDED MATERIAL:

1) MILD STEEL SQUARE STOCK 1/4" SQ X 2-1/4" LONG
2) SCREW 8-32 X 3/8" LG BHCS
3) BRASS ROUND STOCK 5/8" DIAMETER X 7/16" LONG
4) DOWEL PIN .093 DIAMETER X 3/8" LONG (QTY. 3)
5) LEFT OVER COCKING RING SEGMENTS FROM ASSEMBLY NO. 48-12
6) SPRING .035" MUSIC WIRE 1/4" I.D. X 7/16" LONG

THE PURPOSE OF THE COCKING SWITCH IS TO ALLOW THE GUN TO BE CRANKED OR CYCLED WITHOUT "SNAPPING" THE FIRING PINS. WHEN IN THE RETRACTED POSITION, THIS SHORT SEGMENT OF THE COCKING RINGS WILL BE OUT OF THE PATH OF THE FIRING PIN SEAR THUS PREVENTING ENGAGEMENT OF THE SEAR. WHEN EXTENDED, THE SEGMENT WILL BE IN THE PATH OF THE SEAR, ENGAGE IT, AND GUIDE IT INTO THE MAIN COCKING RING SEGMENT. AS THE BOLT ASSEMBLY IS PUSHED FORWARD BY THE BOX CAM WITH THE SEAR RETAINED BY THE RINGS, THE FIRING PIN SPRING IS COMPRESSED. THE SEAR SLIDES AROUND THE RINGS UNTIL SLIPPING THROUGH THE RELEASE HOLE AT BOTTOM DEAD CENTER. BANG!

THE TRICK HERE IS TO CUT THE PIECES FROM THE LEFT OVER COCKING RING PARTS AND SECURE THEM IN PROPER POSITION FOR WELDING. CLAMP THEM LIGHTLY WITH VISE GRIPS AND SLIDE THE ASSEMBLY INTO THE SQUARE HOLE IN THE COCKING RING PLATE. THIS PART IS AN EXTENSION OF THE MAIN COCKING RING SEGMENT, SO BE SURE IT LINES UP ACCORDINGLY. REFERENCE THE MAIN RECOIL PLATE DRAWING 48-14 TO SEE HOW THE FINAL ASSEMBLY LOOKS. THIS PART MUST SLIDE IN THE SQUARE HOLE AND PROVIDE A SMOOTH TRANSITION FOR THE FIRING PIN SEAR ONTO THE MAIN COCKING RING SEGMENT. THE BRASS KNOB MUST SLIDE FREELY ON THE ROUND SECTION OF THE SHAFT.

MAIN RECOIL PLATE

RECOMMENDED MATERIAL:

1) MILD STEEL ROUND STOCK 2-7/8" DIAMETER X 9/16" THICK

THIS PLATE PROVIDES THE MOUNTING BASE FOR THE COCKING RING PLATE, COCKING SWITCH, MAIN SHAFT REAR BUSHING AND DRIVE GEAR THRUST BEARING. THE 5/8" SLOT ON THE EDGE IS WHERE THE BOLT ASSEMBLIES CAN BE WITHDRAWN FROM THE REAR FOR SERVICE.

THE LARGE DIAMETER TURN DOWN ON THE O.D. IS INTENDED TO CENTER THE PLATE CONCENTRICALLY TO THE BOX CAM AND SHOULD BE A SNUG SLIDING FIT INTO THE COUNTER BORE IN THE BOX CAM. THE SMALL DIAMETER TURN DOWN IS TO LOCATE THE COCKING RING PLATE CONCENTRICALLY AND SHOULD BE A SNUG SLIDING FIT AS WELL. DRILL AND BROACH THE SQUARE HOLE AND THEN USE A PIECE OF SQUARE STOCK TO KEEP THE HOLES IN EACH PLATE LINED UP WHILE DRILLING AND TAPPING THE SCREW HOLES TO BOLT THE COCKING RING AND RECOIL PLATES TOGETHER. INSERT THIS PLATE ASSEMBLY INTO THE BOX CAM ASSEMBLY, LINING UP THE BOTTOM DEAD CENTER POSITIONS. MATCH DRILL, COUNTERSINK AND TAP THE 2-56 OUTER HOLES.

RECOIL PLATE ASSEMBLY

RECOMMENDED MATERIAL:

1) COCKING RING PLATE
2) COCKING SWITCH ASSEMBLY
3) RECOIL PLATE ASSEMBLY
4) BRONZE BUSHING 5/16" I.D. BOSTON NO. B57-3 OR EQUIVALENT
5) ROLL PIN 3/32" DIAMETER X 1/2" LONG
6) FLAT WASHER 1/4" I.D.

GOOD NEWS! YOU HAVE ALREADY DONE MOST OF THE WORK ON THIS IN DESC.-12, 13 AND 14 EXCEPT FOR PRESSING IN THE BRONZE BUSHING AND PINNING THE COCKING SWITCH IN POSITION. IT IS VERY IMPORTANT WHEN THE COCKING SWITCH IS PUSHED FORWARD AGAINST THE WASHER AND ROLL PIN THAT THE INNER COCKING RING SURFACES ON THE COCKING SWITCH, AND THE MAIN RING SEGMENT LINE UP FLUSH, SO THAT THE SWITCH CAN SMOOTHLY GUIDE THE FIRING PIN SEAR ONTO THE MAIN COCKING SEGMENT. CLAMP THE SWITCH IN THIS POSITION, SLIDE THE WASHER OVER THE SWITCH SHAFT AND DRILL THE ROLL PIN HOLE. PRESS IN THE ROLL PIN.

THE BRONZE BUSHING SHOULD BE PRESSED IN FLUSH WITH THE BOTTOM OF THE COUNTER BORE IN THE RECOIL PLATE.

DRIVE GEAR

RECOMMENDED MATERIAL:

1) 45° HELICAL GEAR LEFT HAND, 18 TEETH, BOSTON GEAR NO. H2418L OR EQUIVALENT
2) MILD STEEL ROUND STOCK 5/8" DIAMETER X 7/16" LONG

THE PURPOSE OF THIS PART IS TO TURN THE MAIN SHAFT AND BARREL CLUSTER ASSEMBLY.

THE STEEL BUSHING IS REQUIRED TO REDUCE THE BORE IN THE GEAR TO 5/16" AND PROVIDE NOTCHES TO ENGAGE THE SPRING LOADED PIN IN THE MAIN SHAFT. BE SURE THE BUSHING IS A GOOD PRESS FIT IN THE GEAR SO THAT IT WON'T SLIP WHEN TORQUE IS APPLIED. THE BORE SHOULD BE A CLOSE SLIDING FIT ON THE 5/16" DIAMETER MAIN SHAFT.

CRANK DETAILS

RECOMMENDED MATERIAL:

1) MILD STEEL 1/4" HEX STOCK X 3" LONG
2) MILD STEEL 1/2" X 5/8" X 2" LONG
3) MILD STEEL 1/8" X 5/8" X 5-1/8" LONG
4) MILD STEEL ROUND STOCK 3/8" DIAMETER X 1" LONG
5) BRASS, ALUM, WOOD ETC. KNOB STOCK 1/2" DIAMETER X 1-1/8" LONG

THESE ARE THE PARTS NEEDED TO BE MADE FOR THE DRIVE CRANK ASSEMBLY.

THERE ARE NO TRICKS HERE. THERE ARE OBVIOUSLY OTHER WAYS TO ATTACH A HANDLE TO A SHAFT, BUT THE HEX PROVIDES A LOT OF TORQUE. IF YOU CHANGE THE CRANK ARM MOUNTING, REMEMBER THAT IT MUST BE REMOVABLE FROM THE OUTSIDE OF THE GUN AS THE SHAFT WILL BE SECURED INTERNALLY BY THE ROLL PIN WHICH DRIVES THE GEAR. BE CREATIVE WITH THE KNOB.

CRANK ASSEMBLY

RECOMMENDED MATERIAL:

1) CRANK DETAIL PARTS
2) SHOULDER BOLT 1/4" DIAMETER X 1-1/4" LONG
3) ROLL PIN 3/32" DIAMETER X 1/2" LONG
4) SCREW 8-32 X 3/8" LONG BHCS
5) 45° HELICAL GEAR LEFT HAND, 10 TEETH, BOSTON GEAR NO. H2410L OR EQUIVALENT

THIS ASSEMBLY PROVIDES SOME KEY AESTHETICS TO THE APPEARANCE OF THIS CLASSIC GUN (NOT TO MENTION THE TORQUE TO DRIVE THE MAIN GEAR).

IT IS SUGGESTED THAT THE ARM BE ATTACHED TO THE SHAFT WITH THE BUTTON HEAD CAP SCREW PRIOR TO DRILLING THE HOLE FOR THE ROLL PIN. SLIDE THIS ASSEMBLY INTO THE BLOCK AND THROUGH THE GEAR UNTIL THE HEX SLEEVE TOUCHES THE BLOCK. THE SLOT IN THE FACE OF THE GEAR SHOULD BE TOWARD THE CRANK ARM AS SHOWN. WHEN TORQUE IS APPLIED, THE GEAR WILL TRY TO MOVE IN THIS DIRECTION AND WILL THUS BE FORCED AGAINST THE PIN. CENTER THE GEAR AND DRILL THE ROLL PIN HOLE. PRESS IN THE PIN. THE OUTSIDE DIAMETER OF THE GEAR IS ABOUT .45" SO THE 1/2" LONG ROLL PIN WILL HAVE TO BE GROUND DOWN FLUSH TO THIS O.D. DO NOT ATTEMPT TO MOUNT THIS ASSEMBLY TO THE RECOIL PLATE YET.

BREECH BACK PLATE

RECOMMENDED MATERIAL:

1) BRASS ROUND STOCK 3" DIAMETER X 3/8" THICK

THIS PART CLOSES THE REAR OF THE BREECH CASING AND PROVIDES A BASE FOR THE REAR THRUST BEARING, THE COCKING SWITCH KNOB, AND THE BOLT EXTRACTOR KNOB.

BE SURE THE TURN DOWN DIAMETER MATCHES THE INSIDE OF YOUR BREECH CASING MATERIAL TO PROVIDE A SNUG, SLIDING FIT. USE THE KNOB FROM THE COCKING SWITCH ASSEMBLY TO CHECK THAT THE THREE PINS IN THE KNOB WILL DROP INTO THE DRILLED HOLES IN THE BACK PLATE. IT IS THE DROPPING OF THESE PINS INTO THE HOLES WHEN THE KNOB IS ROTATED THAT ALLOWS THE COCKING SWITCH TO MOVE FORWARD TO ENGAGE THE FIRING PIN SEAR.

BOLT DETAILS

RECOMMENDED MATERIAL:

1) MILD STEEL KEY STOCK 1/8" X 1/8" X 1-1/2" LONG (QTY. 10)
2) MILD STEEL ROUND STOCK 1/2" DIAMETER X 3-1/2" LONG (QTY. 10)
3) MILD STEEL ROUND STOCK 1/4" DIAMETER X 1-3/4" LONG (QTY. 20)
4) BOLT 3/8-24 X 3/8" LONG SHCS (QTY. 10)
5) BRASS ROUND STOCK 3/16" DIAMETER X 1/4" LONG (QTY. 10)
* 6) ROUND STOCK 3/32" DIAMETER X 1.9" LONG (QTY. 10) *SEE NOTE
7) SET SCREW 6-32" X 1/8" LONG (QTY. 10)

THESE PARTS MAKE UP THE MANUFACTURED PIECES REQUIRED FOR THE TEN BOLT ASSEMBLIES. BE SURE TO READ INSTRUCTIONS ABOUT THE FIRING PIN.

IT IS IMPORTANT TO UNDERSTAND HOW THE ROUND RECOIL PIN AND THE MAIN BOLT HOUSING ARE SOLDERED AND SCREWED TOGETHER TO FORM A PART THAT MATES AND SLIDES INTO THE CARRIER BLOCK. IT WAS SO MUCH EASIER TO MAKE THIS SHAPE OUT OF TWO PIECES RATHER THAN A SOLID BAR. SILVER SOLDER WOULD BE PREFERABLE FOR STRENGTH AS THE EXTRACTOR SLOT CUTS CLEAR THROUGH THE TOP OF THE BOLT, LEAVING TWO "PRONGS" OF UNSUPPORTED STEEL ON THE TOP. IT IS STRONGLY SUGGESTED THAT EACH BOLT BE STAMPED ON THE LARGE DIAMETER AT THE END WITH NUMBERS 1 THROUGH 10. THIS IS SO THEY CAN ALWAYS BE INSTALLED IN THE SAME HOLE IN THE CARRIER BLOCK. IF YOU SHOULD HAVE TROUBLE WITH THE FUNCTION OF ONE OF THESE (YOU'RE LUCKY IF IT'S ONLY ONE), YOU'LL BE ABLE TO IDENTIFY IT.

A HINT ON THE EXTRACTORS: DON'T MAKE THEM ONE AT A TIME. LINE UP ALL TEN (IN FACT, MAKE A FEW SPARES) AND MILL ACROSS THEM ALL. THE PURPOSE OF THE 1/16" SLOT ALONG THE RECOIL PIN IS TO PROVIDE A PILOT FOR FUTURE DRILLING OF THE FIRING PIN HOLE. BE SURE TO

---

* THE FIRE PINS WERE TOUGH. I ENDED UP USING 1/16" DRILL ROD AND HELI-ARCING OR MELTING A SORT OF "BLOB" ON ONE END. I THEN HAND GROUND A ROUGH HEAD FROM THE "BLOB" WHOSE ONLY PURPOSE IS TO KEEP THE FIRING PIN FROM SLIDING THROUGH THE PIN HOLE. FINAL GRINDING TO LENGTH WILL BE DONE ON THE NEXT ASSEMBLY.

PROPERLY ORIENT IT BEFORE SOLDERING THE PIN INTO THE BOLT HOUSING.

THE BRASS CAM FOLLOWER PIN SHOULD BE SCREWED IN TIGHT. IT BREAKS THROUGH INTO THE BORE OF THE MAIN HOUSING AND MAY HAVE TO BE MACHINED A LITTLE AFTER INSTALLATION TO BE FLUSH WITH THE BORE.

THE HEAD OF THE 3/8-24 CAP SCREW MUST BOTTOM OUT ON THE REAR OF THE BOLT HOUSING.

BE SURE THE 6-32 SET SCREW PENETRATES A BIT OF THE SOLDERED-IN RECOIL PIN TO SECURELY HOLD IT FROM REARWARD MOVEMENT.

BOLT ASSEMBLY

RECOMMENDED MATERIAL:

1) BOLT DETAIL PARTS
2) SCREW 6-32" X 1/2" LONG BHCS (QTY. 10)
3) SCREW 6-32" X 1/2" LONG FHCS (QTY. 10)
4) SPRING .040 DIAMETER MUSIC WIRE .200" I.D. X 1-1/2" LONG, 7/8" MAX. SOLID COMPRESSION LENGTH
5) SPRING .010 DIAMETER MUSIC WIRE 5/64" O.D. X 3/8" LONG
6) PIN 3/64" DIAMETER (I USED PAPER CLIPS)

THE PURPOSE OF THIS ASSEMBLY IS THE SAME AS IN ANY OTHER GUN. IT HOUSES THE FIRING PIN, ITS SPRING, THE EXTRACTOR, THE HAMMER, AND THE MUCH PREVIOUSLY MENTIONED FIRING PIN SEAR, WHICH IS ACTUALLY THE HEAD OF A CAP SCREW.

IT IS HIGHLY SUGGESTED THAT YOU START BY SCREWING THE 3/8-24 CAP SCREW PARTS INTO EACH BOLT. IT IS IMPORTANT THAT EACH OF THESE ASSEMBLIES BE NEARLY IDENTICAL IN LENGTH. TAKE THE SHORTEST ASSEMBLY AND MAKE THE OTHERS THE SAME LENGTH WITHIN .001" BY FACING OFF THE CAP SCREW END, NOT THE BOLT FACE. IF THE SHORTEST ASSEMBLY IS SOMEWHAT SHORTER THAN NOMINAL ON THE PRINT, DON'T WORRY BECAUSE THERE IS LATER ADJUSTMENT AVAILABLE AT FINAL ASSEMBLY. NUMBER THE CAP SCREWS TO MATCH THE BOLT NUMBER.

INSTALL THE 6-32 FLAT HEAD SCREWS INTO THE HAMMER SHAFT. TIGHTEN THESE ALL THE WAY DOWN AND LOCK TIGHT OR SOLDER IN PLACE. THE O.D. OF THESE SCREW HEADS MAY HAVE TO BE TURNED DOWN TO PROVIDE A FREE SLIDING FIT IN THE BOLT HOUSING BORE.

DRILL OUT THE PILOT SLOT IN THE SOLDERED RECOIL PIN FOR A CLEARANCE FIT ON THE 1/16" DIAMETER FIRING PIN. SLIP THE FIRING PIN INTO THE HOUSING FROM THE REAR. HOLD THE PIN SO THAT IT IS BOTTOMED OUT ON THE FIRING PIN HEAD AND GRIND THE OTHER END OF THE PIN UNTIL .020" EXTENDS BEYOND THE BOLT FACE.

CLAMP THE EXTRACTOR INTO ITS SLOT AND USE A SPACER TO SET THE .060 GAP TO THE BOLT FACE. DRILL THE PIN HOLE THROUGH. IT IS A TRICKY HOLE. I USED A TINY ENDMILL TO "SPOT" THE ROUND SURFACE OF THE BOLT BEFORE DRILLING. INSTALL THE SMALL SPRING UNDER THE REAR OF THE EXTRACTOR AND PRESS IN THE PIN. I USED A PIECE OF PAPER CLIP

AND SLIGHTLY "SQUASHED" ONE END WITH PLIERS SO IT WOULD FORCE PRESS AND STAY FIXED IN THE HOLE. IF NECESSARY, SLIGHTLY ENLARGE THE HOLE THROUGH THE EXTRACTOR SO IT WILL FREELY PIVOT ON THE PIN.

SLIDE THE FIRING PIN SPRING ONTO THE HAMMER SHAFT AND, WITH THE FIRING PIN IN PLACE, SCREW IN THE 3/8-24 BOLT PLUG. SCREW THE 6-32 BUTTON HEAD SCREW INTO THE BACK OF THE HAMMER SHAFT UNTIL THE .13" DIMENSION IS ACHIEVED. LOCK TIGHT THE SCREW. IT MUST MAINTAIN THE .13" DIMENSION TO ENSURE PROPER ENGAGEMENT WITH THE COCKING RING SWITCH.

A 1/4" ROUND FILE CAN BE USED TO FORM THE EXTRACTOR "CLAW" TO MATCH A ROUND CARTRIDGE AND GRIP IT BETTER. THESE SHELL EXTRACTORS CAN BE EASILY CASE HARDENED AT HOME. A HARDWARE STORE OR WELDING SUPPLY HOUSE CAN PROVIDE YOU WITH A POWDER THAT, WHEN USED WITH A PROPANE TORCH, WILL CASE HARDEN STEEL. I USED A PRODUCT NAMED "KASENIT" WHICH PROVIDED EXCELLENT RESULTS.

BOLT EXTRACTOR ASSEMBLY

RECOMMENDED MATERIAL:

1) BRASS SQUARE STOCK 1/2" SQ. X 1-3/8" LONG
2) BRASS ROUND STOCK 5/16" DIAMETER X 1-3/4" LONG
3) BRASS ROUND STOCK 7/8" DIAMETER X 1" LONG
4) BRASS SHEET STOCK 1/16" THICK X 7/16" X 1" LONG
5) SPRING .040" DIAMETER MUSIC WIRE 5/16" I.D. X 3/8" LONG, 1/8" MAX COMPRESSED LENGTH
6) SCREW 10-32 BHCS X 3/8" LONG
7) ROLL PIN 3/32" DIAMETER X 1/4" LONG

THIS ASSEMBLY HELPS WITHDRAW THE BOLT ASSEMBLIES FOR SERVICE. THE METAL TAG WAS OFTEN ATTACHED TO THE REAR CASING PLATE BY A CHAIN (NOT SHOWN) TO KEEP THE ASSEMBLY FROM GETTING LOST. THE THIN SLOT ACTUALLY SERVES AS A SECTION OF THE BOX CAM. WHEN THE CAM PIN OF A BOLT ASSEMBLY IS IN THIS SLOT, THE BOLT MAY BE REMOVED OUT THE BACK BY TURNING THE KNOB AND PULLING THE EXTRACTOR OUT.

THE HINT HERE IS TO HAND FORM WITH A FILE OR BELT SANDER THE OUTSIDE RADIUS ON THE SQUARE STOCK USING THE INSIDE OF THE BRASS BREECH CASING AS A GUIDE. THAT'S CLOSE ENOUGH. I ALSO MILLED THE SLOT STRAIGHT ACROSS EVEN THOUGH IT TOO SHOULD HAVE A RADIUS. SLIP THE PART INTO THE BOX CAM ASSEMBLY TO ENSURE THAT THE SLOT LINES UP SMOOTHLY WITH THE BOX CAM TRACK.

MAGAZINE BASE ASSEMBLY

RECOMMENDED MATERIAL:

1) BRASS TUBING 3-1/4" O.D. X 3" I.D. X 2" LONG
2) BRASS FLAT STOCK 1/4" X 1-1/8" X 3" LONG (QTY. 2)
3) BRASS ROUND STOCK 5/16" DIAMETER X 1" LONG
4) BRASS FLAT STOCK 1/4" X 3/8" X 1" LONG
5) DOWEL PIN 1/8" DIAMETER X 1-3/4" LONG
6) BRASS FLAT STOCK 1/16" THICK X 9/16" X 1-5/8"
7) 2-56 FHMS (QTY. 2)

THIS PIECE PROVIDES THE MOUNTING BASE FOR THE ACCLES DRUM TYPE MAGAZINE. OTHER TYPES OF FEED MECHANISMS WERE DEVELOPED SUCH AS THE L.F. BRUCE VERTICAL SYSTEM AND LATER BELT FEED SYSTEMS BUT THE ACCLES DRUM GIVES THE GUN A VERY CLASSIC APPEARANCE. THE MOUNT IS HINGED TO ALLOW ACCESS TO THE BREECH AREA FOR CLEARING JAMS.

THE ONLY HINT HERE IS TO USE A 1-1/8" SPACER TO POSITION THE FLAT BARS BEFORE SOLDERING, SO THAT THEY REMAIN SQUARE. I USED SOFT SOLDER AND PUT A COUPLE 4-40 FLAT HEAD SCREWS FROM INSIDE THE CIRCULAR PIECE FOR ADDED STRENGTH. SILVER SOLDER WOULD MAKE THE SCREWS UNNECESSARY. BE SURE YOU UNDERSTAND THE CUTOUTS AND WHICH SIDE THEY GO ON IN RELATION TO THE HINGE.

THE 1/4" HOLE AND ITS MATING THREADED HOLE MUST ALSO LINE UP AS THIS IS WHERE THE SHAFT FOR THE FEED WHEEL MOUNTS.

THE EJECTOR SHOULD BE INSTALLED AFTER FINAL GUN ASSEMBLY AND TESTING TO BE SURE IT RIDES IN THE CENTER OF THE SLOT IN THE CARRIER BLOCK. THIS EJECTOR WILL KNOCK OUT ANY SHELLS THAT MIGHT TRY TO GO AROUND A SECOND TIME.

MAGAZINE DETAILS

RECOMMENDED MATERIAL:

1) BRASS ROUND STOCK 1-1/4" DIAMETER BY 1" LONG
2) DOWEL PINS 1/8" DIAMETER X 1/2" LONG (QTY. 5)
3) BRASS TUBE 4-1/2" O.D. X 4-1/4" I.D. X 1-1/8" LONG
4) BRASS SHEET 1/16" THICK X 4-1/2" SQUARE (QTY. 2)
5) BRASS TUBE 1" O.D. X 15/16" I.D. X 1-1/8" LONG
6) BRASS SHEET 1/16" THICK X 7/8" X 1-3/4" LONG
7) BRASS SHEET 1/16" THICK X 1" X 7/8" LONG

THE WHEEL IS SUPPOSED TO SEPARATE ONE CARTRIDGE AT A TIME FROM THE MAGAZINE AND DELIVER IT AT THE PROPER TIME TO THE OPEN BREECH IN THE CARRIER WHEEL. IT IS INDEXED BY THE COG PINS IN THE REAR BARREL PLATE. THE MAGAZINE, OF COURSE, HOLDS THE CARTRIDGES.

DRILL THE CENTER HOLE IN THE FEED WHEEL FOR A SLIDING FIT ON A 1/4" DIAMETER SHOULDER BOLT. DRILL THE FIVE EQUALLY SPACED HOLES ON A 1.000" DIAMETER CIRCLE. THEN TURN THE O.D. TO 1.000" DIAMETER. THIS SHOULD LEAVE FIVE SEMI-CIRCULAR GROOVES. THIS JOB COULD, OF COURSE, BE DONE WITH A BALL END MILL. DON'T FORGET THE TURN DOWN ON ONE END TO ALLOW FOR A RIM ON THE SHELL CASING.

DRILL AND REAM FOR A PRESS FIT ON THE DOWEL PINS, BEING SURE TO GET THEM OFFSET TO THE PROPER SIDE OF THE SEMI-CIRCULAR GROOVES. PRESS IN THE PINS PER PRINT.

I MADE THE DRUM BY USING THE 4-1/2" TUBE AS A TEMPLATE AND ACCURATELY SCRIBING A LINE ON THE BRASS SHEETS TO THE INSIDE OF THE TUBE. USING A BELT SANDER, I CAREFULLY SANDED UP TO THE SCRIBE LINE UNTIL THE SHEETS JUST SNAPPED INTO THE I.D. OF THE TUBE. LOCATE BOTH ROUND DISCS INTO THE TUBE AND PUNCH OUT THE 1" CENTER HOLE FOR THE CENTER TUBE. PUNCH THE LOWER 1" HOLE FOR INSERTING THE FEED WHEEL IN ONE DISC ONLY.

CUT THE 5/16" SLOT IN THE OUTER TUBE RING INCLUDING THE 30° ANGLE.

CUT OUT THE BAFFLE AND SPRING STOP.

RECOMMENDED MATERIAL:

1) MAGAZINE DETAILS 48-24
2) BRASS HINGES 3/4" X 5/8" (QTY. 2)
3) JEWELRY BOX HASP OR SIMILAR LATCH
4) SPRING .030 DIAMETER MUSIC WIRE X 1/2" O.D. X 9" LONG MAX COMPRESSED LENGTH 3"
5) BRASS FLAT STOCK 1/16" X 7/8" X 10-1/2" LONG
6) FEED ARM 48-29

IN MY OPINION THE ACCLES DRUM MAGAZINE IS THE MOST AESTHETIC IN APPEARANCE, BUT WAS NEVER THE MOST SUCCESSFUL. I HAVE NOT BEEN ABLE TO FIND MUCH TECHNICAL INFORMATION ON THE INTERNAL DETAILS OF THE ACCLES DRUM, SO I KIND OF HAND TO "WING" IT. WHAT I'VE BUILT DOES FUNCTION BUT YOU MIGHT WANT TO ANALYZE IT AND ADD SOME IDEAS OF YOUR OWN SUCH AS INTERNAL BAFFLES OR SPRINGS.

REMEMBER THAT BRASS CONDUCTS HEAT VERY WELL. AFTER SOLDERING A PART, USE A "HEAT SINK" SUCH AS A WET CLOTH TO KEEP THIS AREA COOL WHILE SOLDERING IN ANOTHER AREA. A "PENCIL POINT" TORCH TIP WILL HELP LOCALIZE AND CONTROL HEATING.

SWEAT SOLDER THE DISC WITH THE LOWER 1" ACCESS HOLE TO THE I.D. OF THE LARGE TUBE RING, MAKING SURE IT IS FLUSH WITH THE FACE OF THE TUBE AND THE LOWER 1" HOLE IS ON CENTER WITH THE 5/16" CUT OUT IN THE 4-1/2" RING. SOLDER THE 1" INNER TUBE TO THIS ASSEMBLY. CUT THE OTHER DISC WITH AS THIN A BLADE AS POSSIBLE ALONG THE TOP OF THE BASE ASSEMBLY PLATE. THIS PLATE GOES TO THE REAR. INSTALL AND SOLDER THE BAFFLE. SOLDER THE HINGES TO THE PLATE BUT SCREW THEM TO THE BASE MOUNT PLATE. MATCH DRILL AND TAP THE 2-56 SCREWS THROUGH THE MOUNT AND INTO THE DRUM RING. THIS MAKES THE DRUM ASSEMBLY REMOVABLE FOR FUTURE MODIFICATIONS.

FORM THE 10-1/2" BRASS STRIP INTO A CIRCULAR SHAPE TO MAKE THE SINGLE FILER PLATE. USING EMPTY .22 CAL. CASES AS SPACERS (THE SPACE IN THE SINGLE FILE "TROUGH" SHOULD BE AROUND .235" ALLOWING THE CASE BODY TO SLIDE FREELY BUT NOT WIDE ENOUGH TO LET THE CASE RIM INSIDE), SOLDER IN THE PLATE.

THE 1/2" COIL SPRING WILL LIMIT THE MAGAZINE CAPACITY AS IT CAN ONLY BE COMPRESSED UNTIL IT IS SOLID. A TORSIONAL SPRING SUCH AS SHOWN ON THE DRAWING WILL ALLOW AROUND 300° OF OPEN SPACE IN THE TROUGH FOR LOADING. I HAVE NOT BEEN ABLE TO LOCATE ONE, BUT I PLAN TO MAKE ONE SOME DAY FROM SPRING WIRE.

SOLDER IN THE SAW CUT PARTIAL CIRCLE TO THE BOTTOM REAR OF THE DRUM.

REAR MAIN SHAFT NUTS

RECOMMENDED MATERIAL:

1) BRASS HEX STOCK 5/8" HEX X 1" LONG
2) BRASS HEX STOCK 5/8" HEX X 1/4" LONG

THESE PARTS SECURE THE MAIN SHAFT AT THE REAR AND PROVIDE HEAD SPACING ADJUSTMENT AS DESCRIBED IN THE WRITE-UP FOR 48-0.

NO HINTS EXCEPT TO MAKE A PRETTY KNOB ON THE END WITHOUT CUTTING DEEP ENOUGH TO BREAK INTO THE 5/16-24 INTERNAL THREAD.

BOX CAM TEMPLATE

THIS TEMPLATE IS INTENDED TO BE CUT OUT AND USED IN CONJUNCTION WITH DRAWING 48-8 AND DESC. 48-8 TO HELP MAKE THE BOX CAM.

YOKE MOUNT (NOT EGGS)

RECOMMENDED MATERIALS:

1) PIPE 6" O.D. X 5" I.D. X 1-1/4" LONG
2) SHOULDER BOLTS 1/2" O.D. X 1-1/4" LONG

THIS IS A SIMPLE MOUNT WHICH WILL LET THE GUN STAND ON ITS OWN. A POST OR BOX OR CAR HOOD CAN SERVE AS THE BASE.

CUT THE PIPE RING IN HALF AND FIND THE ROUGH CENTER OF GRAVITY OF YOUR GUN. DRILL AND TAP FOR THE SHOULDER BOLTS. MOUNT YOUR GUN.

AUTHENTIC MOUNTS FOR THIS GUN VARY DRAMATICALLY AS IT WAS PRODUCED FROM THE EARLY 1860'S AND SAW SERVICE THROUGH WORLD WAR I. UNITED STATES ORDINANCE HANDBOOKS OFTEN SURFACE AT GUN SHOWS AND SOME ARE AVAILABLE THROUGH THE WASHINGTON GOVERNMENT PRINTING OFFICE. ONE THAT I FOUND USEFUL WAS "THE HANDBOOK OF THE GATLING GUN, CALIBER .30 MODELS OF 1895, 1900, AND 1903," JUNE 1, 1905, REVISED OCTOBER 15, 1906, REVISED APRIL 11, 1910. CARRIAGE AND LIMBER DETAILS ARE CONTAINED HERE.

FEED ARM

RECOMMENDED MATERIAL:

1) BRASS FLAT STOCK 1/16" X 1-1/4" X 2-7/8" LONG
2) BRASS FLAT STOCK 1/16" X 3/4" X 3/4" LONG
3) BRASS TUBING 1-1/8" O.D. X 1-1/6" I.D. X 7/8 LONG
4) BRASS ROUND STOCK 3/16" DIAMETER X 3/4" LONG
5) 2-56 FHMS X 1/2" LONG

THE PURPOSE OF THIS PART IS TO TRANSMIT SPRING FORCE TO THE SHELLS IN THE MAGAZINE FOR SMOOTH LOADING. IT PIVOTS AROUND THE CENTER TUBE IN THE DRUM MAGAZINE.

NO BIG PROBLEMS HERE. BE SURE THAT THE TUBE ROTATES FREELY AROUND THE CENTER TUBE IN THE DRUM WHILE THE ROD AT THE END OF THE ARM "TRACKS" IN THE SHELL SINGLE FILE TROUGH IN THE DRUM.

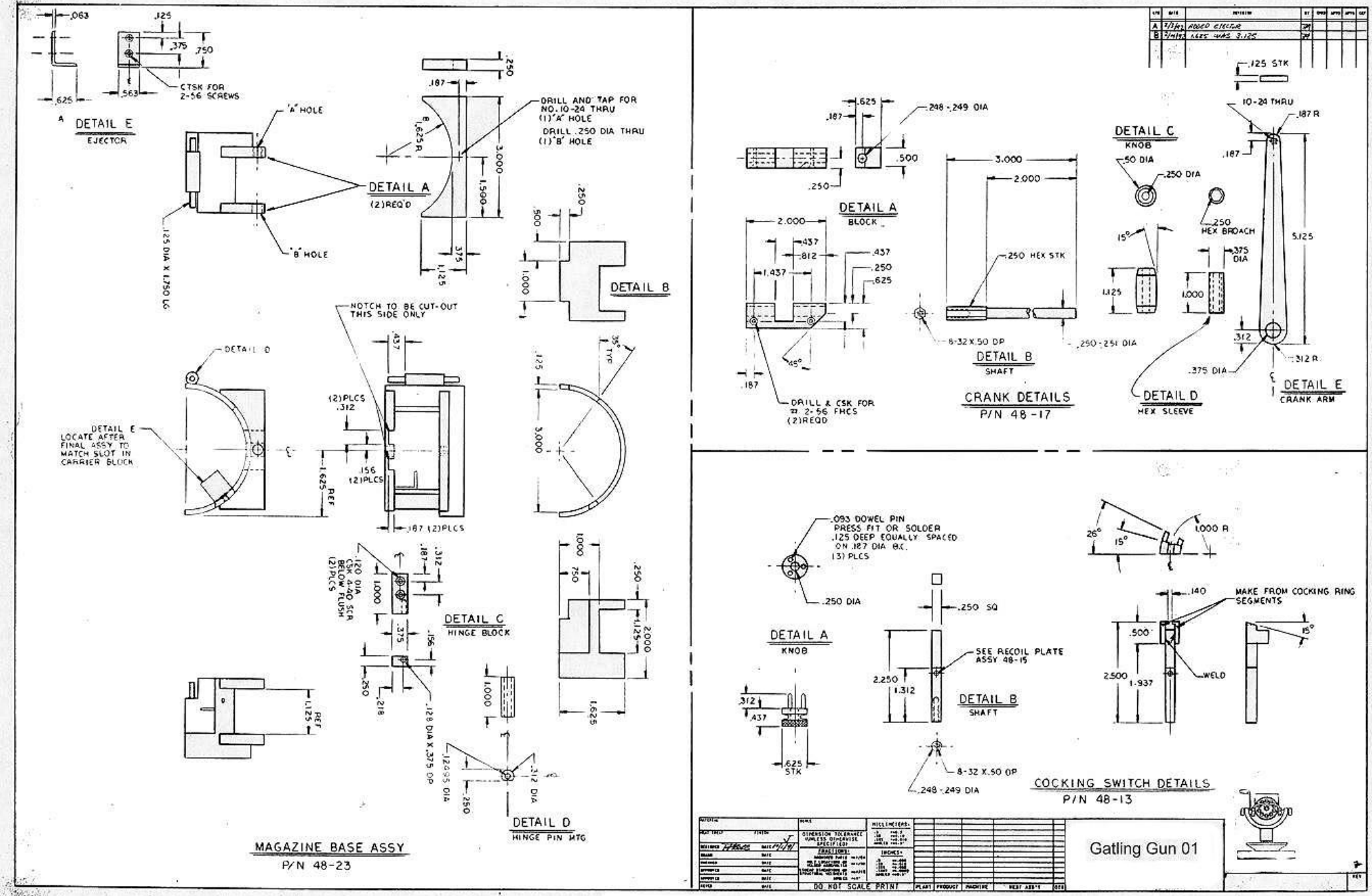

DETAIL E
EJECTOR
CTSK FOR 2-56 SCREWS
'A' HOLE
'B' HOLE
DETAIL A
(2)REQ'D
DRILL AND TAP FOR NO. 10-24 THRU (1)'A' HOLE
DRILL .250 DIA THRU (1)'B' HOLE
.125 DIA X 1.750 LG
DETAIL B
NOTCH TO BE CUT-OUT THIS SIDE ONLY
DETAIL D
DETAIL E LOCATE AFTER FINAL ASSY TO MATCH SLOT IN CARRIER BLOCK
(2)PLCS .312
.156 (2)PLCS
.187 (2)PLCS
.120 DIA CSK 4-40 SCR BELOW FLUSH (2)PLCS
DETAIL C
HINGE BLOCK
.128 DIA X .375 DP
.12495 DIA
.312 DIA
DETAIL D
HINGE PIN MTG
MAGAZINE BASE ASSY
P/N 48-23
.248-.249 DIA
DETAIL A
BLOCK
DRILL & CSK FOR #2-56 FHCS (2)REQD
.250 HEX STK
8-32 X .50 DP
.250-.251 DIA
DETAIL B
SHAFT
CRANK DETAILS
P/N 48-17
DETAIL C
KNOB
.50 DIA
.250 DIA
.250 HEX BROACH
.375 DIA
DETAIL D
HEX SLEEVE
.125 STK
10-24 THRU
.187 R
.312 R
DETAIL E
CRANK ARM
.093 DOWEL PIN PRESS FIT OR SOLDER .125 DEEP EQUALLY SPACED ON .187 DIA B.C. (3) PLCS
.250 DIA
DETAIL A
KNOB
.625 STK
.250 SQ
SEE RECOIL PLATE ASSY 48-15
DETAIL B
SHAFT
8-32 X .50 DP
.248-.249 DIA
1.000 R
MAKE FROM COCKING RING SEGMENTS
WELD
COCKING SWITCH DETAILS
P/N 48-13
DO NOT SCALE PRINT
Gatling Gun 01

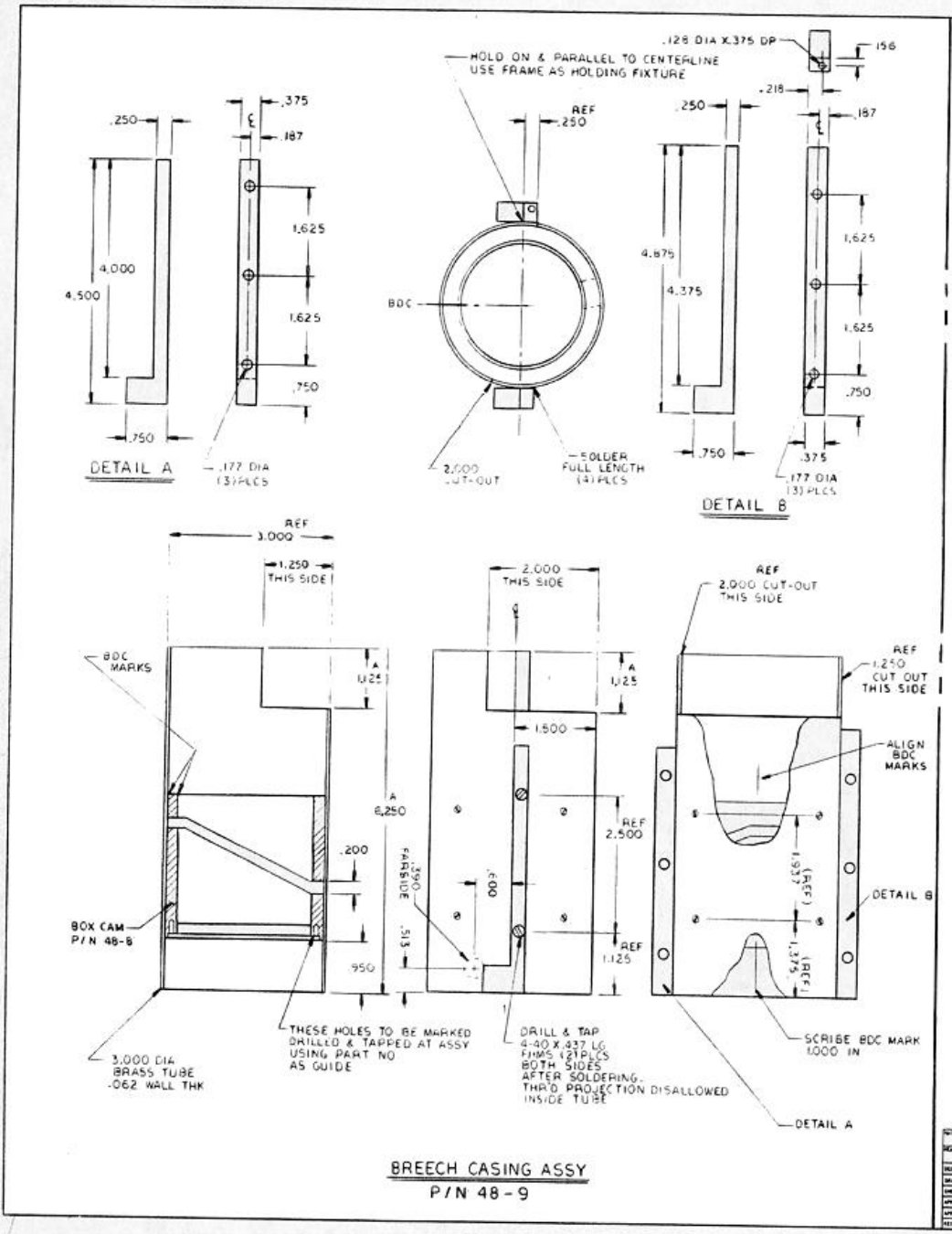

BREECH CASING ASSY
P/N 48-9

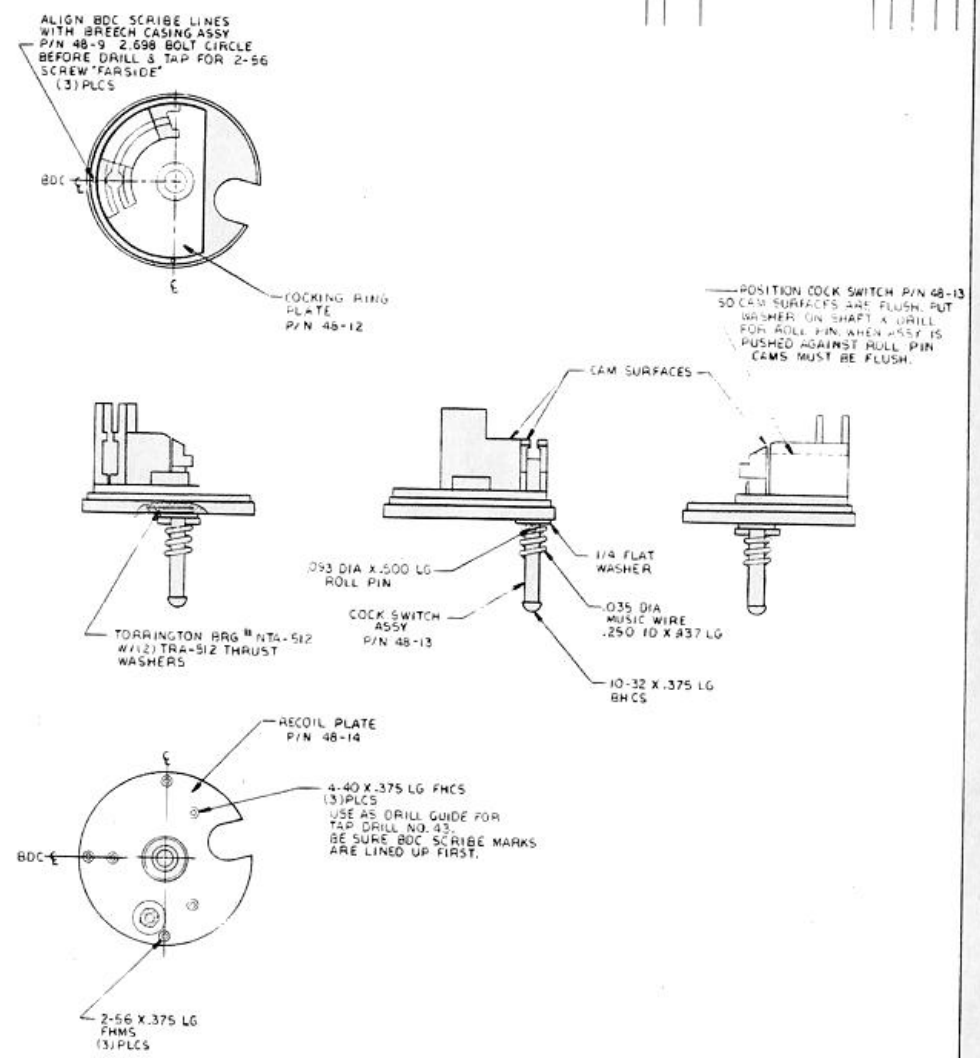

RECOIL PLATE ASSY
P/N 48-15

DIMENSION TOLERANCE (UNLESS OTHERWISE SPECIFIED)
FRACTIONS:
MILLIMETERS:
INCHES:
DO NOT SCALE PRINT

Gatling Gun 01

8

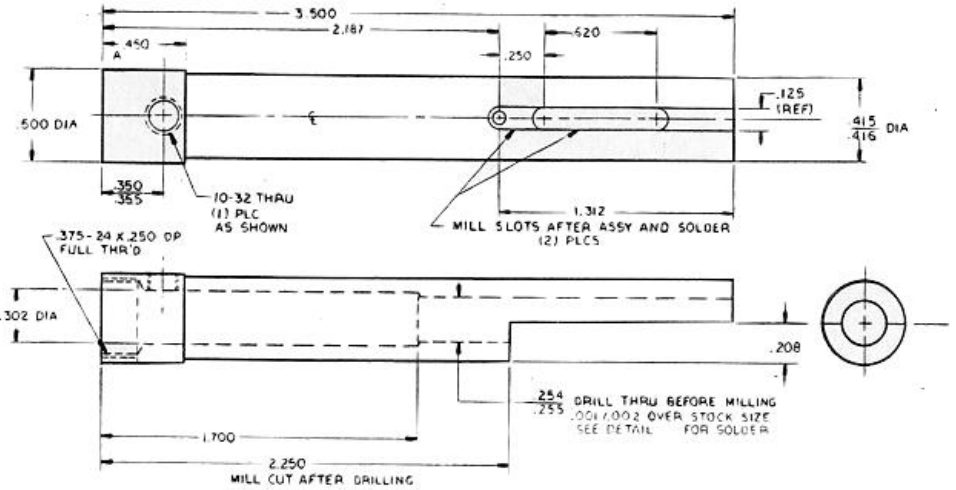

DETAIL A
(BOLT HOUSING)

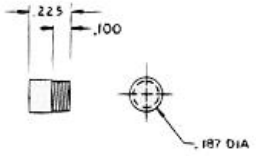

DETAIL C
(CAM FOLLOWER PIN)

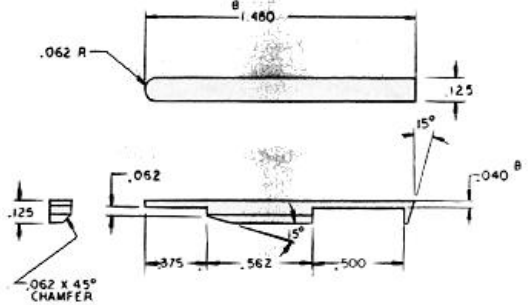

DETAIL E
(EXTRACTOR)

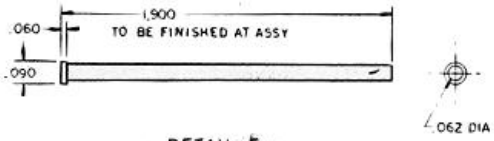

DETAIL F
(FIRING PIN)

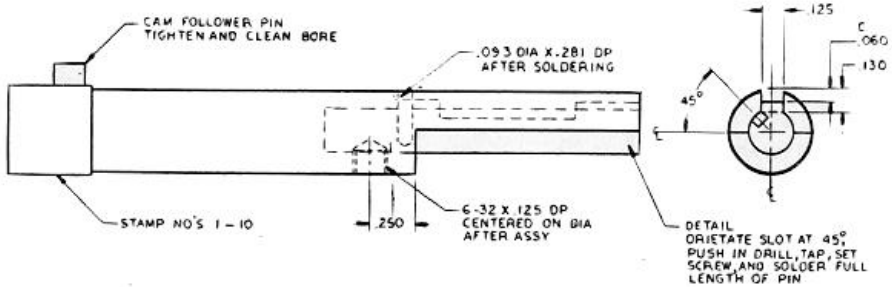

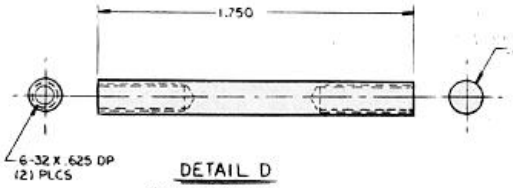

DETAIL D
(HAMMER SHAFT)

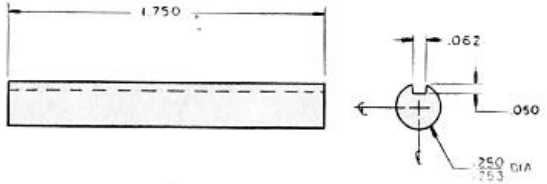

DETAIL B
(RECOIL PIN)

BOLT DETAILS
P/N 48-20
(SCALE 3x1)

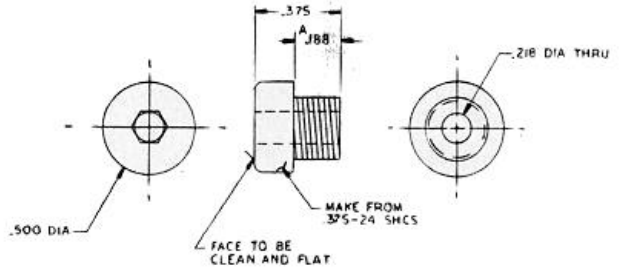

DETAIL G
(BOLT PLUG)

MATERIAL	SCALE	MILLIMETERS					
HEAT TREAT	FINISH	DIMENSION TOLERANCE UNLESS OTHERWISE SPECIFIED					
DESIGNED	DATE	FRACTIONS	INCHES				
DRAWN	DATE						
CHECKED	DATE						
APPROVED	DATE						
APPROVED	DATE						
RELEASED	DATE	DO NOT SCALE PRINT	PLANT	PRODUCT	MACHINE	NEXT ASSY	QTY

Gatling Gun 02

9

REV

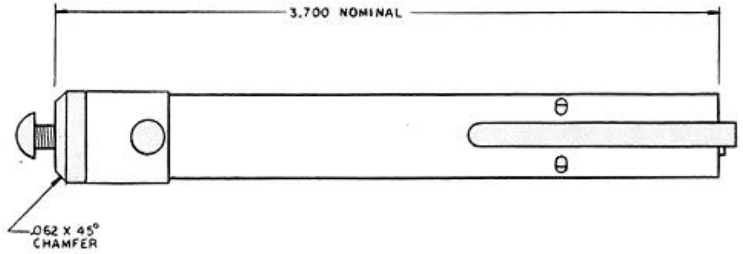

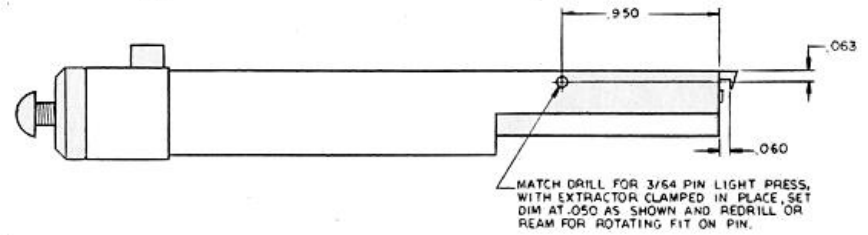

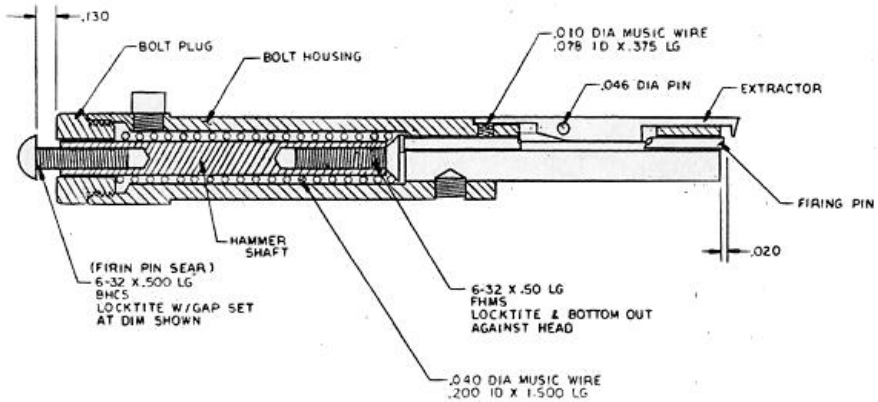

BOLT ASSY

P/N 48-21

(SCALE 3'X 1')

DO NOT SCALE PRINT

Gatling Gun 03

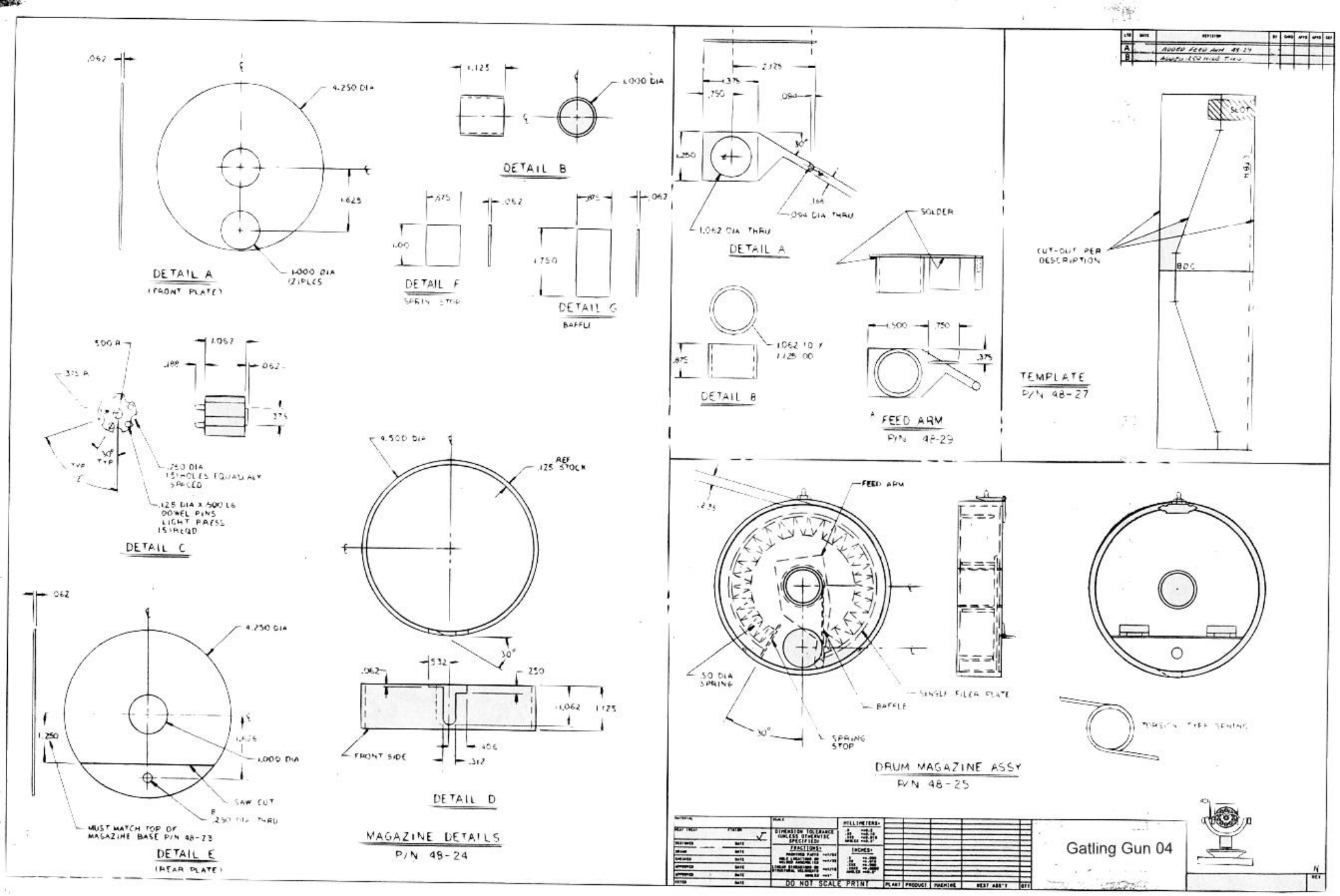

DETAIL A
(FRONT PLATE)
4.250 DIA
1.625
1.000 DIA (2) PLCS
DETAIL B
1.125
1.000 DIA
DETAIL F
SPRING STOP
DETAIL G
BAFFLE
DETAIL C
.250 DIA 15 HOLES EQUALLY SPACED
.125 DIA X .500 LG DOWEL PINS LIGHT PRESS 15 REQD
DETAIL D
4.500 DIA
REF .125 STOCK
FRONT SIDE
DETAIL E
(REAR PLATE)
MUST MATCH TOP OF MAGAZINE BASE P/N 48-23
SAW CUT
.250 DIA THRU
MAGAZINE DETAILS
P/N 48-24
DETAIL A
1.062 DIA THRU
.094 DIA THRU
DETAIL B
1.062 ID X 1.125 OD
SOLDER
FEED ARM
P/N 48-29
TEMPLATE
P/N 48-27
CUT-OUT PER DESCRIPTION
SLOT
BDC
DRUM MAGAZINE ASSY
P/N 48-25
FEED ARM
.50 DIA SPRING
SINGLE FILER PLATE
BAFFLE
SPRING STOP
TORSION TYPE SPRING
DO NOT SCALE PRINT
Gatling Gun 04

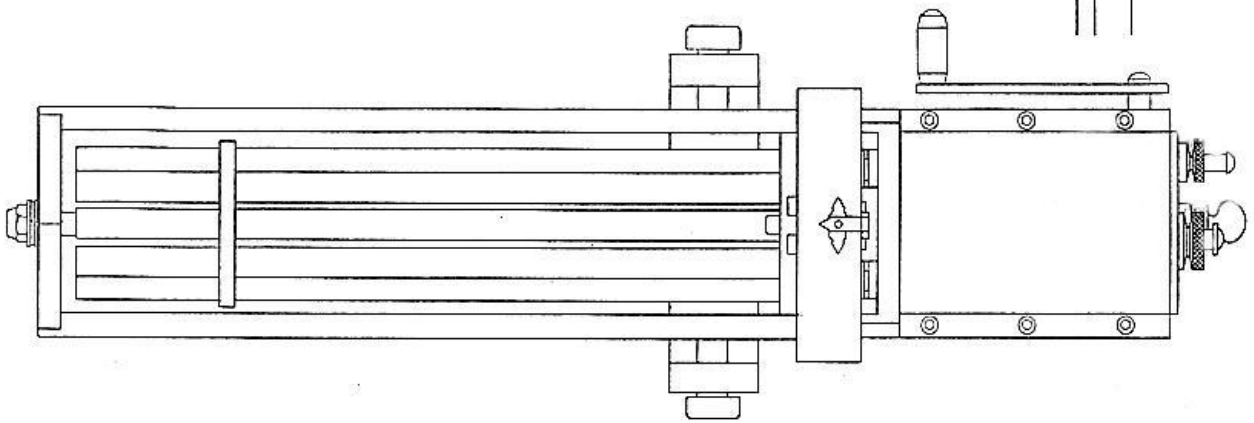

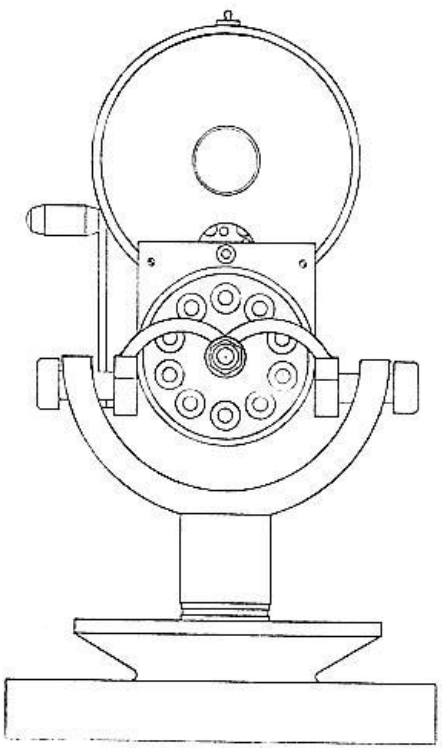

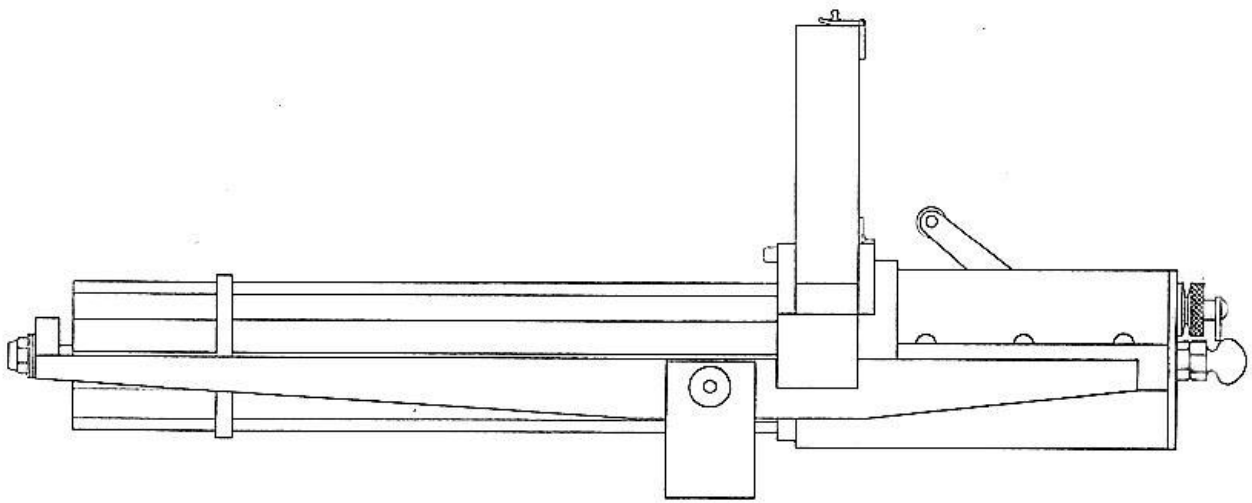

DO NOT SCALE PRINT

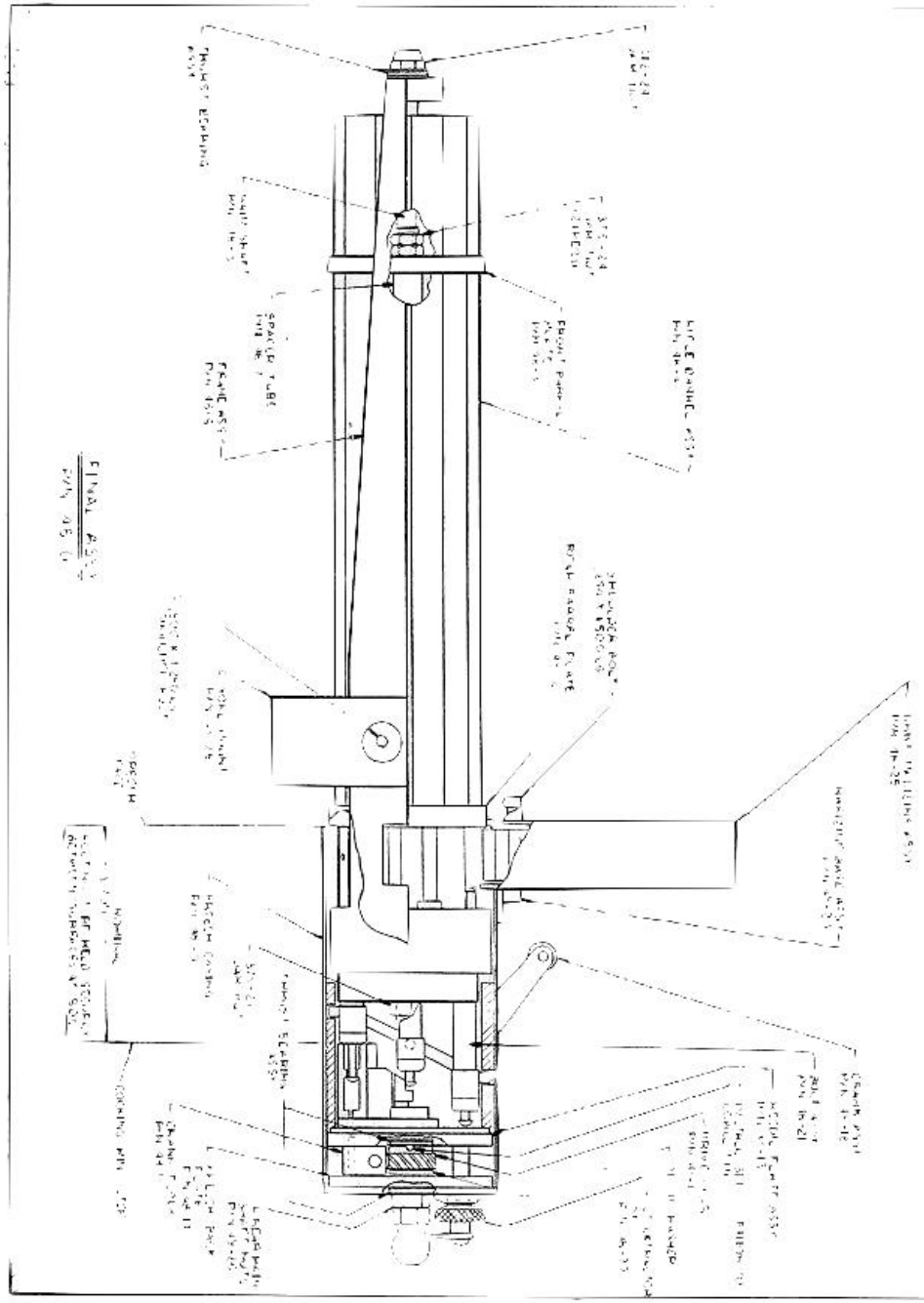

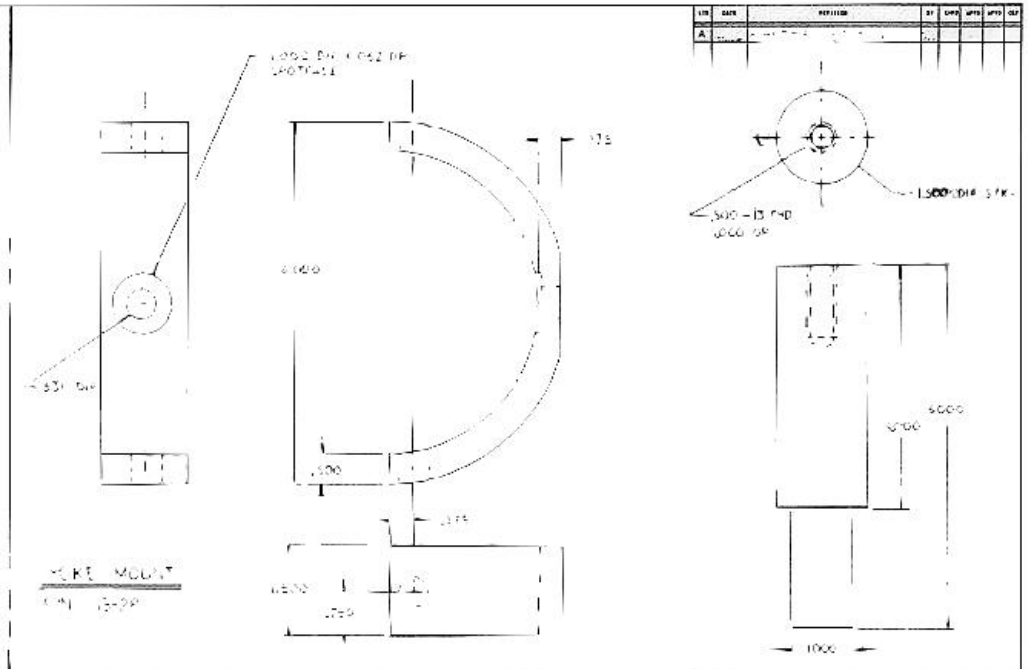

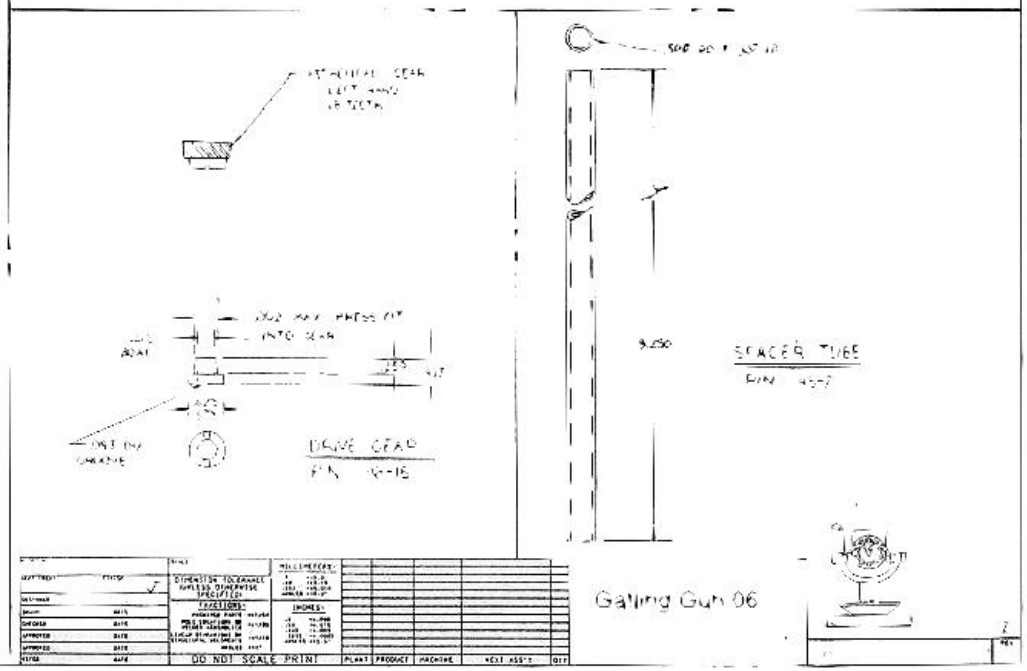

DO NOT SCALE PRINT

Gatling Gun 06

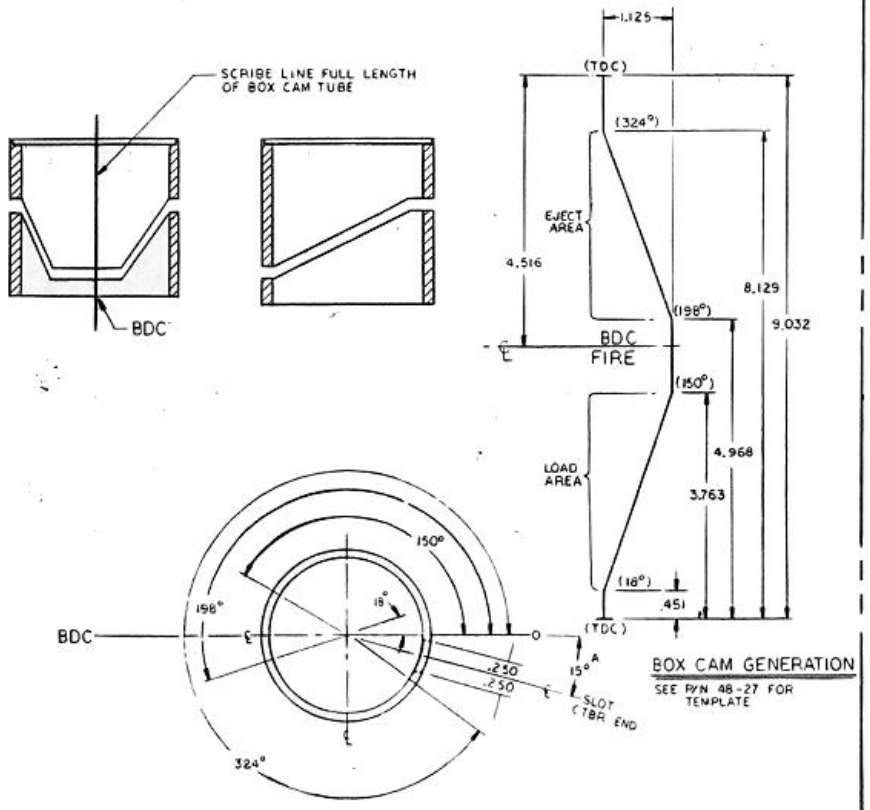

BOX CAM GENERATION

SEE P/N 48-27 FOR TEMPLATE

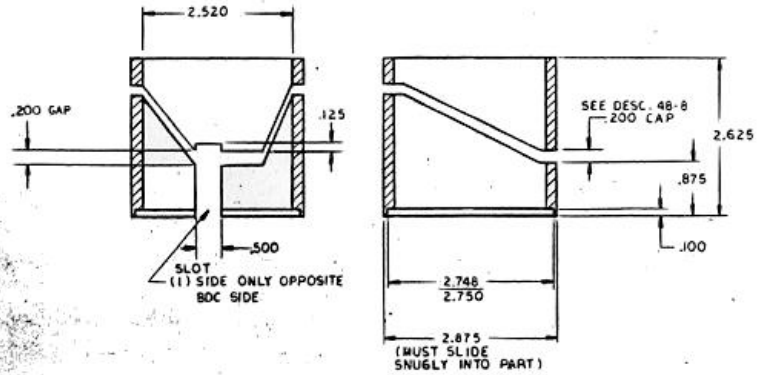

BOX CAM

P/N 48-8

LTR	DATE	REVISION	BY	CHKD	APVD	APVD
A		.875 MIN .872, .500 MIN .15 DEEP .12"				
B		.374 MAX .372				
C		ADDED SLOT				

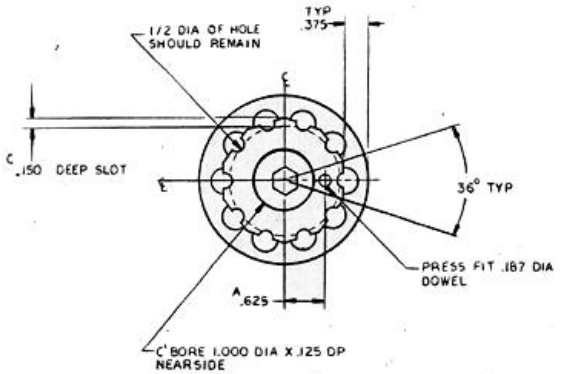

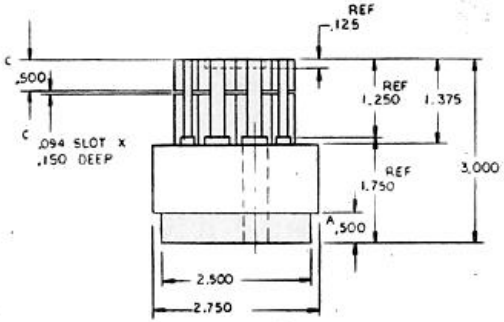

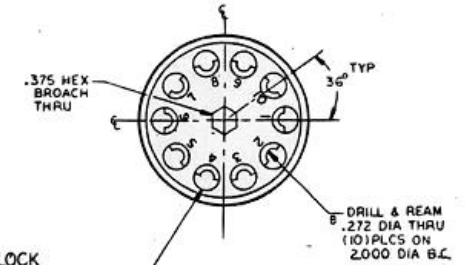

CARRIER BLOCK

P/N 48-1

(MAKE WITH 48-2 AND 48-3)

MATERIAL	HEAT	MILLIMETERS				
NEXT ASSY	FINISH	DIMENSION TOLERANCE UNLESS OTHERWISE SPECIFIED				
DRAWN DATE		FRACTIONAL	DECIMAL			
TRACED DATE						
APPROVED DATE						
APPROVED DATE						
VENDOR DATE		DO NOT SCALE PRINT		PLANT	PRODUCT	MACHINE

Gatling Gun 07

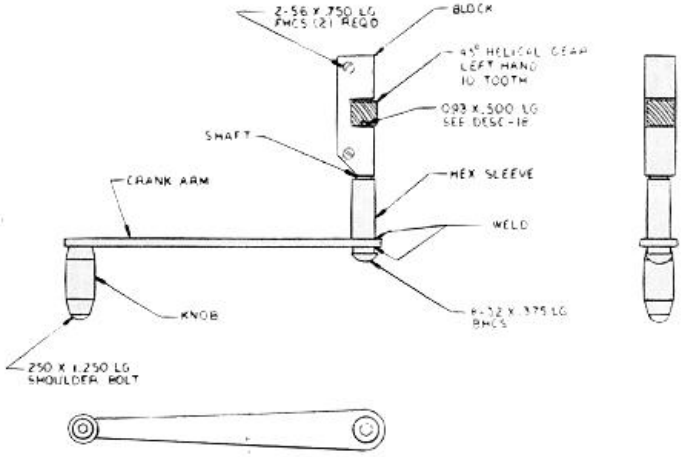

CRANK ARM ASSY

P/N 48-18

(SEE P/N 48-1 FOR DETAILS)

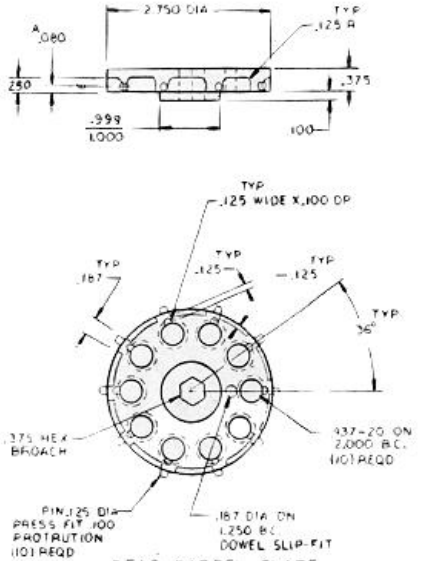

REAR BARREL PLATE

P/N 48-2

LTR	DATE	REVISION	BY	CHKD	APVD	APVD	REF
A		.080 DIA. ADDED					
B		1.198 DIA WAS 2.197					

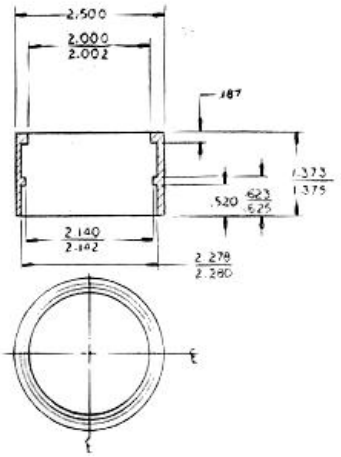

OUTER COCKING RING

P/N 48-11

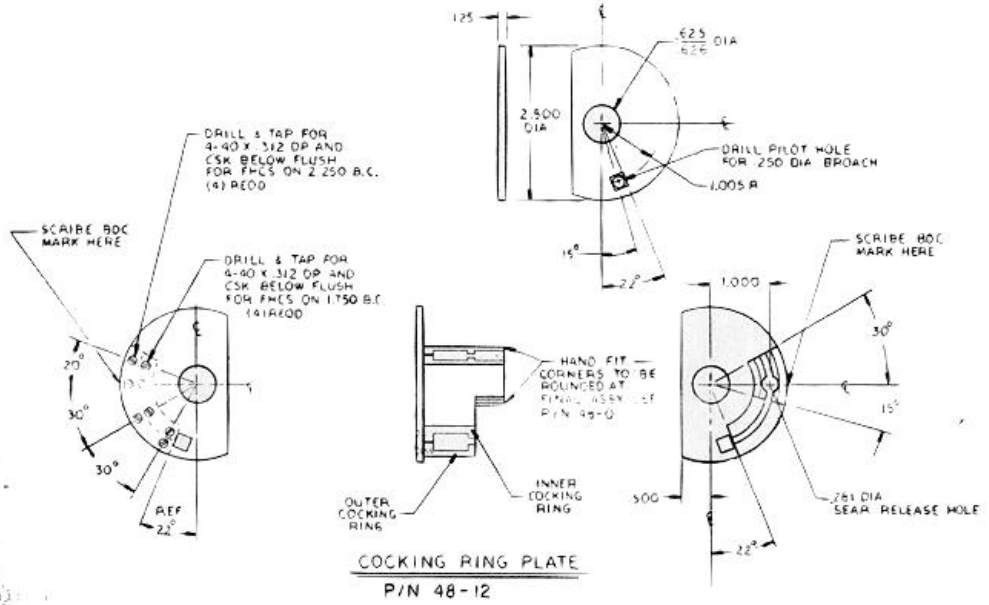

COCKING RING PLATE

P/N 48-12

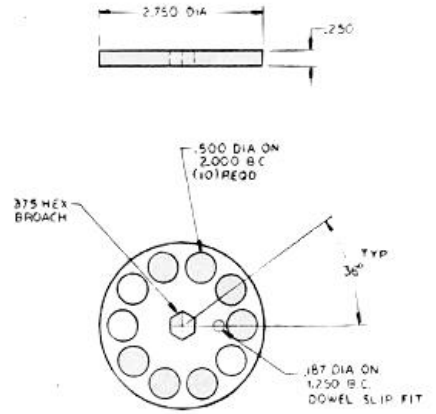

FRONT BARREL PLATE

P/N 48-3

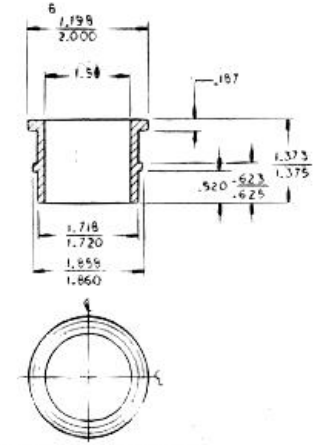

INNER COCKING RING

P/N 48-10

MATERIAL		SCALE		MILLIMETERS			
HEAT TREAT	FINISH	DIMENSION TOLERANCE UNLESS OTHERWISE SPECIFIED:					
MACHINED	DATE						
DRAWN	DATE	FRACTIONS:		INCHES:			
CHECKED	DATE						
APPROVED	DATE						
APPROVED	DATE						
METRIC	DATE	DO NOT SCALE PRINT		PLANT	PRODUCT	MACHINE	NO.

Gatling Gun 08

4

REV

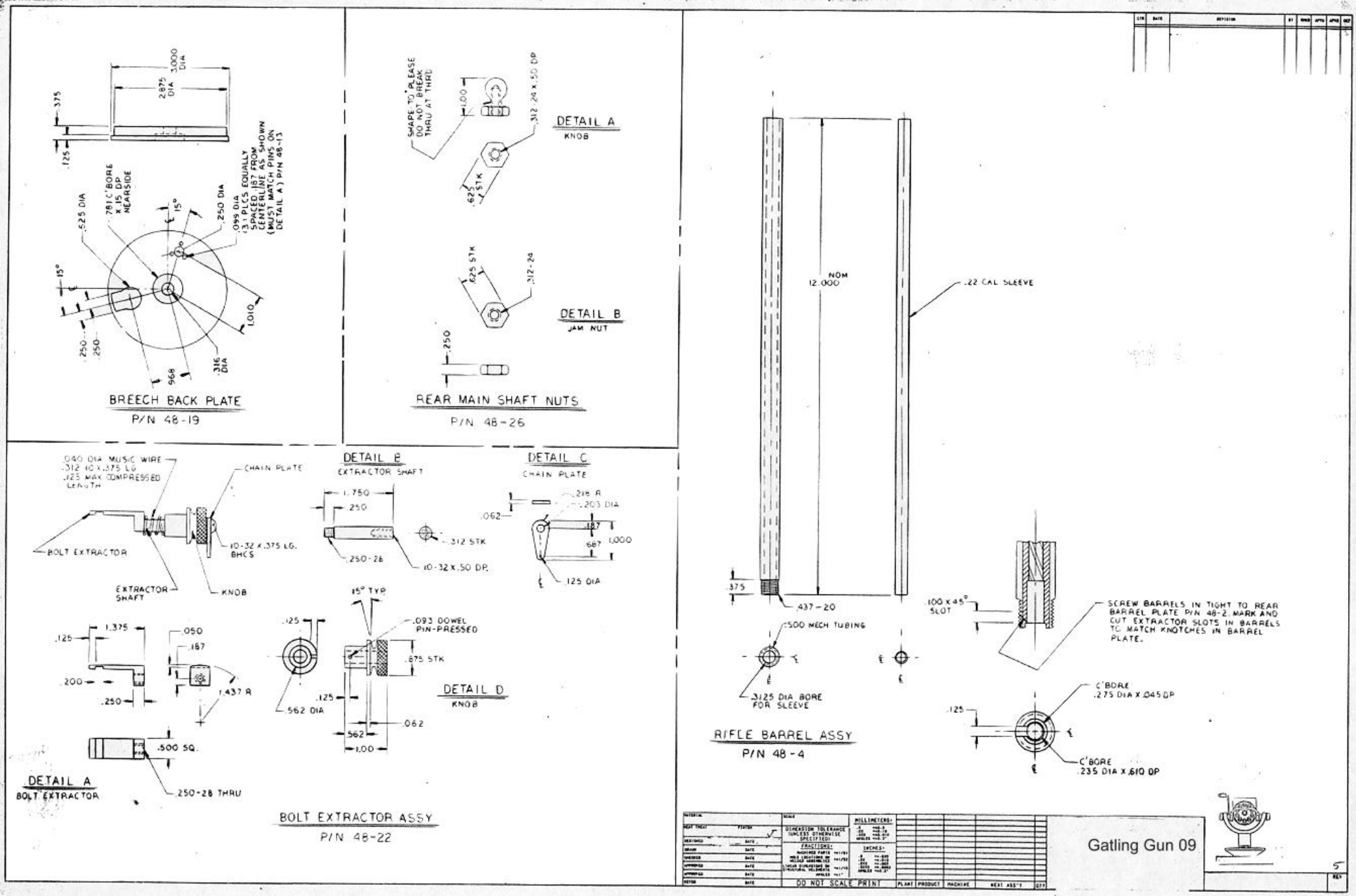
BREECH BACK PLATE
P/N 48-19
.375
.125
3.000 DIA
2.875 DIA
.781 C'BORE X .15 DP NEARSIDE
.525 DIA
.250 DIA
.099 DIA (3) PLCS EQUALLY SPACED .187 FROM CENTERLINE AS SHOWN (MUST MATCH PINS ON DETAIL A) P/N 48-13
15°
1.010
.250
.250
.968
.316 DIA
REAR MAIN SHAFT NUTS
P/N 48-26
SHAPE TO PLEASE DO NOT BREAK THRU AT THRD
1.00
.312-24 X .50 DP
DETAIL A
KNOB
.625 STK
.625 STK
.312-24
DETAIL B
JAM NUT
.250
.040 DIA MUSIC WIRE .312 10 X .375 LG .125 MAX COMPRESSED LENGTH
CHAIN PLATE
BOLT EXTRACTOR
10-32 X .375 LG. BHCS
EXTRACTOR SHAFT
KNOB
DETAIL B
EXTRACTOR SHAFT
1.750
.250
.250-28
.312 STK
10-32 X .50 DP.
DETAIL C
CHAIN PLATE
.218 R
.203 DIA
.062
.187
.687
1.000
.125 DIA
.125
1.375
.050
.187
.200
.250
1.437 R
.500 SQ.
.250-28 THRU
DETAIL A
BOLT EXTRACTOR
15° TYP
.125
.093 DOWEL PIN-PRESSED
.875 STK
.125
.562 DIA
.062
.562
1.00
DETAIL D
KNOB
BOLT EXTRACTOR ASSY
P/N 48-22
NOM 12.000
.22 CAL SLEEVE
.375
.437-20
.500 MECH TUBING
.3125 DIA BORE FOR SLEEVE
RIFLE BARREL ASSY
P/N 48-4
.100 X 45° SLOT
SCREW BARRELS IN TIGHT TO REAR BARREL PLATE P/N 48-2. MARK AND CUT EXTRACTOR SLOTS IN BARRELS TO MATCH KNOTCHES IN BARREL PLATE.
C'BORE .275 DIA X .045 DP
.125
C'BORE .235 DIA X .610 DP
DIMENSION TOLERANCE (UNLESS OTHERWISE SPECIFIED)
MILLIMETERS
FRACTIONS
INCHES
DO NOT SCALE PRINT
PLANT
PRODUCT
MACHINE
NEXT ASS'Y
Gatling Gun 09
5

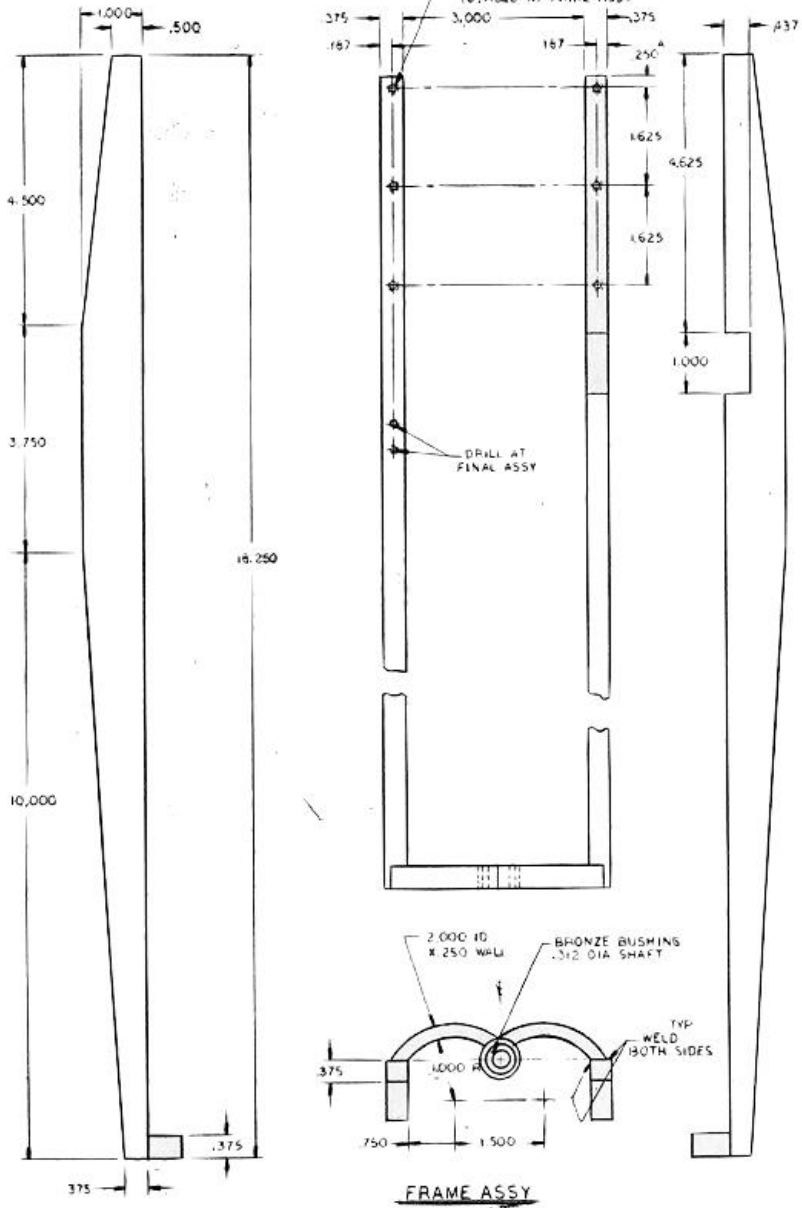

FRAME ASSY
P/N 48-6

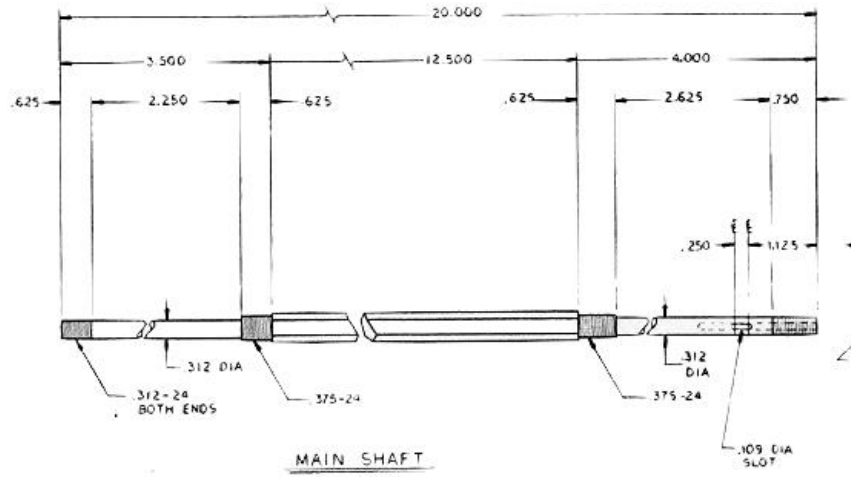

MAIN SHAFT
P/N 48-5

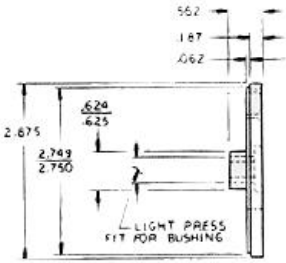

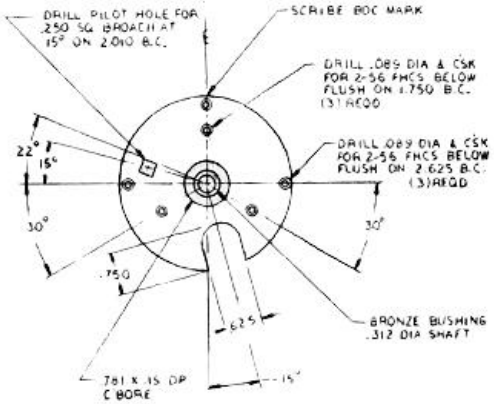

RECOIL PLATE
P/N 48-14

MATERIAL	SCALE	MILLIMETERS						
NEXT ASSY	FINISH	DIMENSION TOLERANCE UNLESS OTHERWISE SPECIFIED						
DESIGNED	DATE	FRACTIONS	INCHES					
DRAWN	DATE							
CHECKED	DATE							
APPROVED	DATE							
APPROVED	DATE							
ISSUED	DATE	DO NOT SCALE PRINT	PLANT	PRODUCT	MACHINE	NEXT ASS'Y	QTY	

Gatling Gun 10

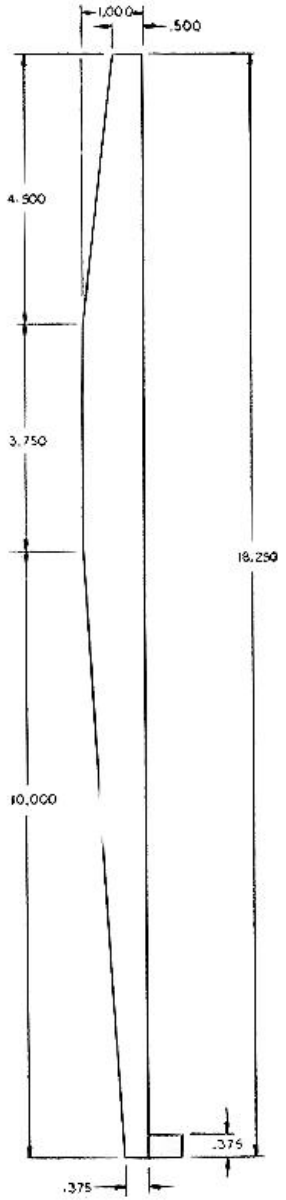

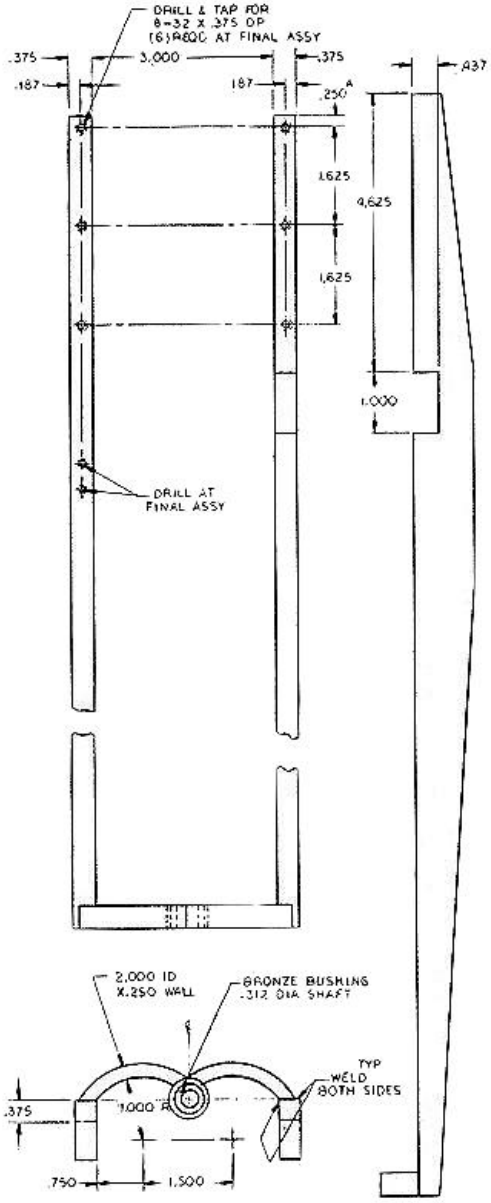

FRAME ASSY

P/N 48-6

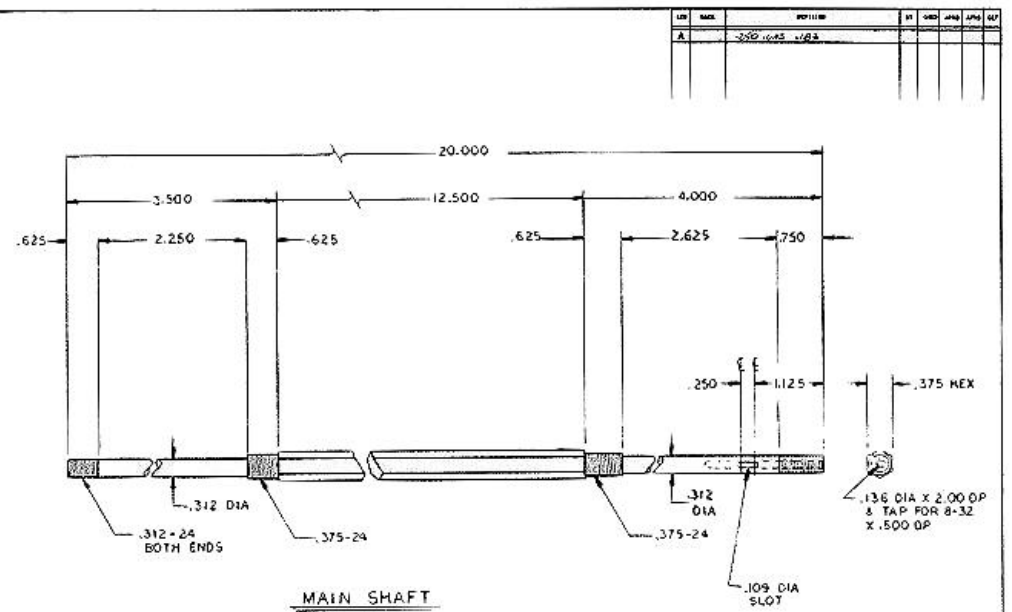

MAIN SHAFT

P/N 48-5

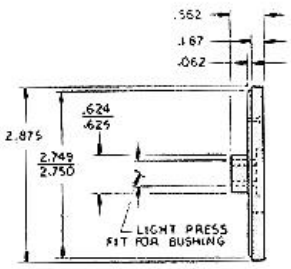

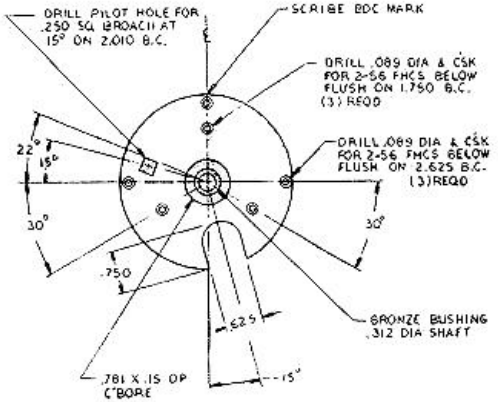

RECOIL PLATE

P/N 48-14

DO NOT SCALE PRINT

Gatling Gun 11

GLOSSARY

REF	Reference (A Double-check dimension added for clarity)
BDC	Bottom Dead Center
TDC	Top Dead Center
CBR	Counterbore
CSK	Countersink
BC	Bolt Circle
TYP	Typical (For other Locations)
STK	Stock (Size of Recommended Stock)
DIA	Diameter
R	Radius
DP	Deep
LG	Long
REQ'D	Required
FHMS	Flat Head Machine Screw 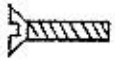
BHCS	Button Head Cap Screw 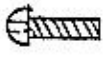
SHCS	Socket Head Cap Screw 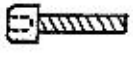
RHMS	Round Head Machine Screw 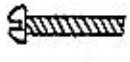
FHCS	Flat Head Cap Screw 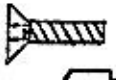
	Shoulder Bolt 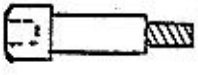
	Roll Pin 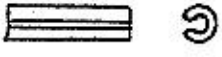

TAKE FIVE—
BREAK TIME

WHOA! THIS ORDER OF CONSTRUCTION WAS DELIBERATELY PLANNED. BY NOW YOU SHOULD BE HOLDING A CLUSTER OF 10-RIFLED BARRELS WHICH I'M SURE YOU HAVE ALREADY BOLTED TOGETHER AND SLIPPED INTO THE FRAME. IF YOU ARE A TRUE GATLING GUN FREAK, YOUR ADRENALIN LEVEL SHOULD BE UP ENOUGH TO HELP YOU FACE WHAT LIES AHEAD.