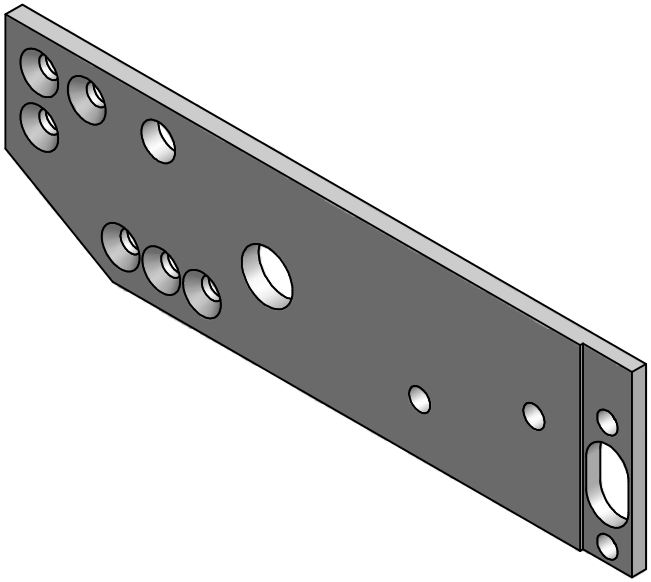

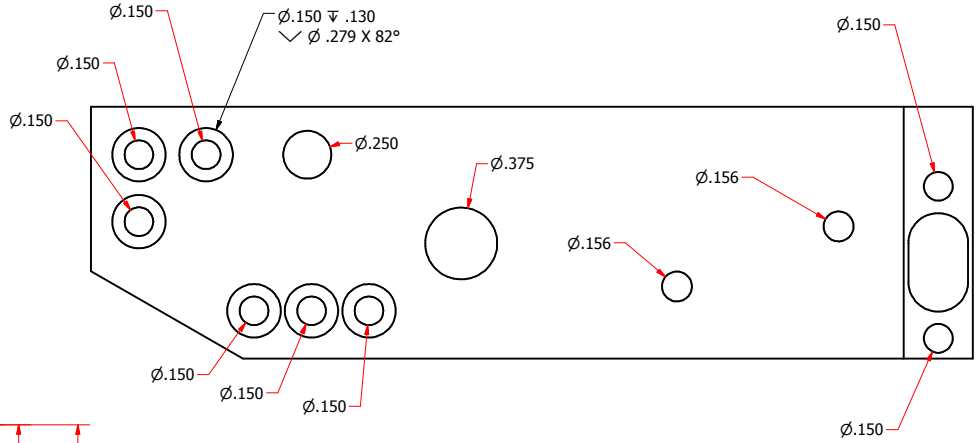

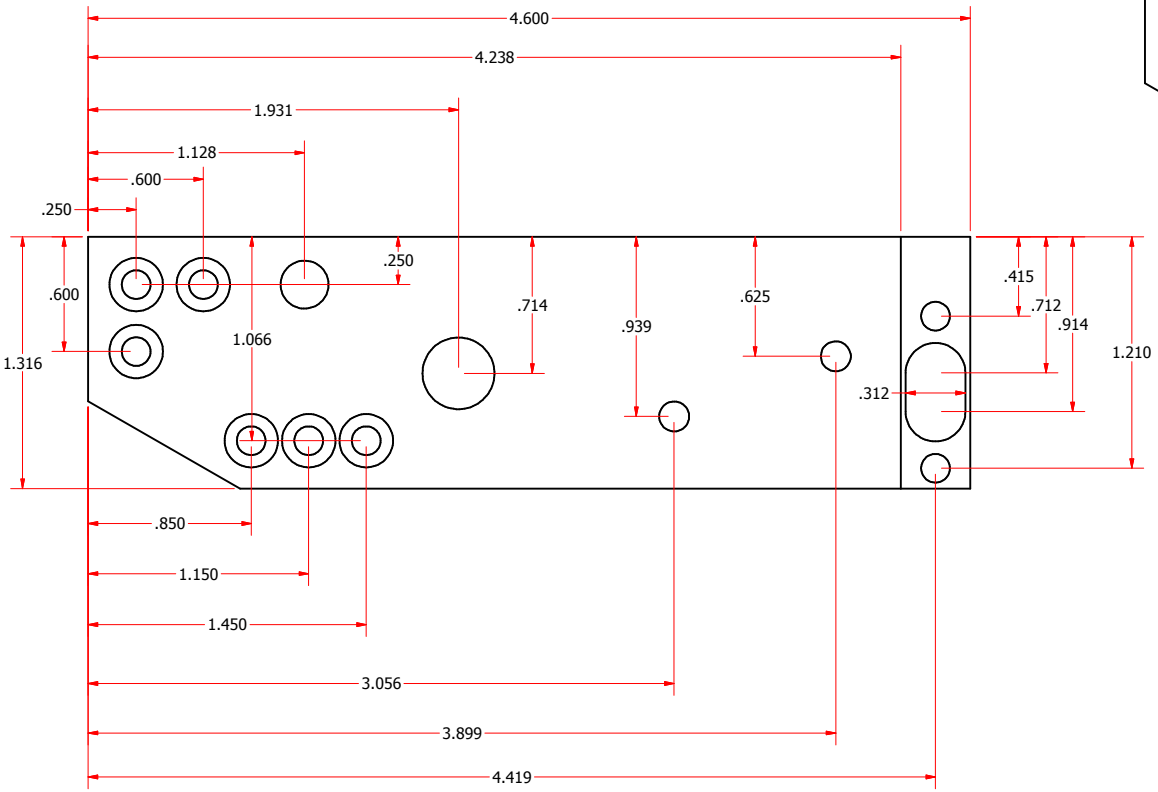

DRAWN joe	1/29/2010				
CHECKED		TITLE			
QA					
MFG					
APPROVED					
		SIZE C		DWG NO ar15 left side plate	REV
		SCALE		SHEET 1 OF 1	