SMALL ARMS

IDENTIFICATION SERIES

SPECIAL SERVICE LEE-ENFIELDS ...

COMMANDO & AUTO MODELS

.45 De Lisle Commando Carbine,

Charlton, Howell & Rieder Rifles

and Howard Francis Carbine

Notes & Illustrations

S.A.I.S.
No. 13

Ian Skennerton

CONTENTS

A .45 De Lisle Carbine Genealogy 5
.45 De Lisle Carbine Specifications 23
De Lisle Patent Specification & Drawings 24
Lee-Enfield Autoloading Conversion Genealogy 30
Self-Loading Rifle & Carbine Specifications 35
Charlton Self-Loading Rifle, N.Z. 37
Electrolux Charlton Self-Loading Rifle 39
Howell, Rieder & Ekins Self-Loading Rifles 41
Contemporary Australian S.L. Conversion 43
7.65mm Howard Francis Carbine 45
Identification & Markings... 47

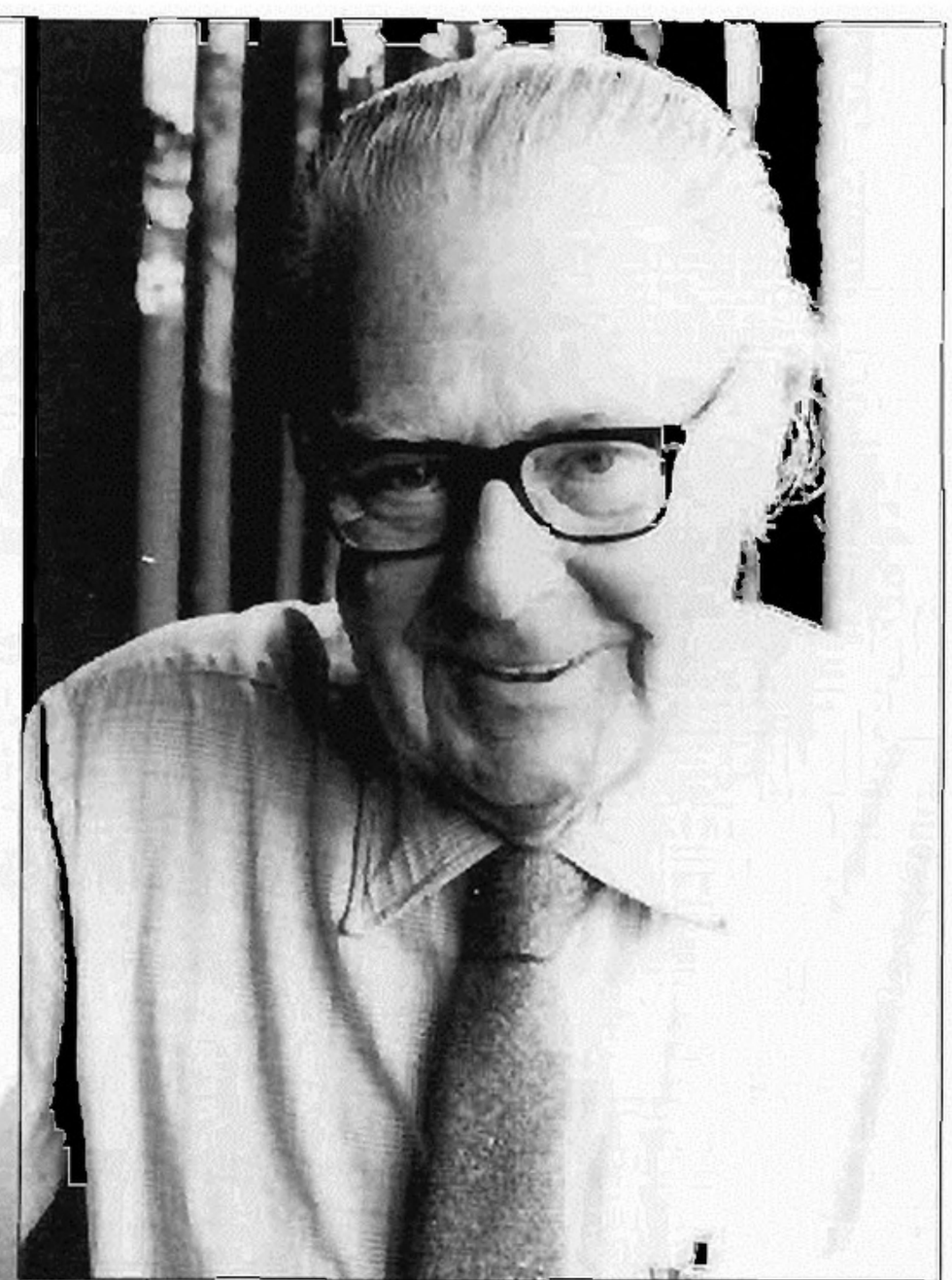

William Godfrey De Lisle at his Bournemouth home in 1980, with prototype suppressed .22 rimfire Browning autoloader.
Ian Skennerton

De Lisle's prototype .22 Browning autoloader, engraved 'DE LISLE SILENT AUTO .22 CALIBRE RIFLE No. 1001' inscribed after plans were made for .45 production; their numbers started at 1002. National Army Museum

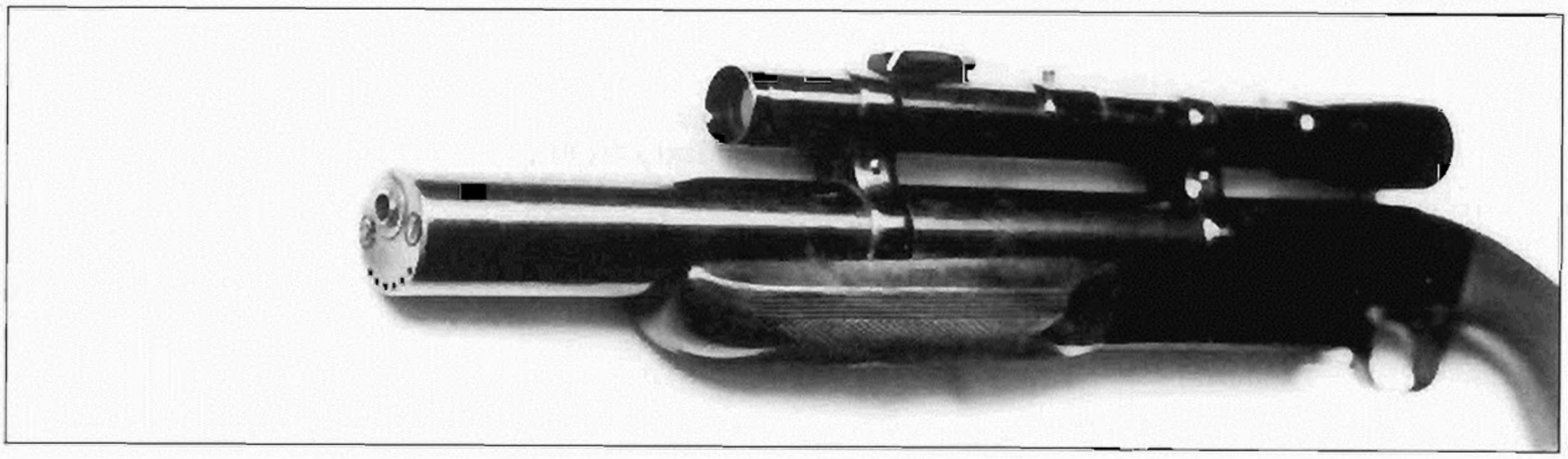

.45 DE LISLE COMMANDO CARBINE

DE LISLE CARBINE GENEALOGY

Born in South Africa on 29th May 1905, William Godfrey De Lisle commenced school at Kings College School, Wimbledon. Then he attended Lincoln school which had incorporated the old Lincoln Cathedral Grammar School. Secondary education was undertaken at Loughborough College, now known as the Loughborough University, and he graduated after a 5-year course in Mechanical and Electrical Engineering. De Lisle was then employed as a development engineer with Siemans Bros. and joined the Air Ministry in 1935. The Air Ministry later became the Ministry of Air Production or M.A.P.

During a visit by the author to De Lisle's residence at Bournemouth in late1980, Godfray De Lisle recalled that his first practical interest in silencer design occurred *'when I was 16 years old, at school in Lincoln. I used to make up .22 rifle silencers for my school friends for rabbit shooting they were made from empty cocoa tins and were, with the lower velocity .22, very effective. These things were not illegal in those days, but the police learned what I was doing and asked me not to do any more and explained the dangers from accidents and particularly from crime if these things got around. I never made up any more until the last war, and then it was for a real purpose.'*

De Lisle had an avid interest in firearms and was well acquainted with members of the London gun trade; Major Holland, Mark Dinely, and the Wilkes Bros. who had a gunshop in Beak St., Soho. De Lisle's first prototype suppressed rifle at this time was a .22 Browning auto-loader that he set up in Beckenham in 1942 and 1943. The wood stock was acquired from Hollands, Wilkes assisted with the stocking-up of De Lisle's .22 RF suppressed rifle.

Early 9mm and .45 prototypes were fabricated from old movie guns supplied by Mark Dinely of Bapty's, a long established movie gun hire business. All serviceable Lee Enfields had been impressed into service during the war; new rifles were not available. In the course of initial tests, suppressed rifles were 'field tested' by firing at a large brick chimney on a building across the street in broad daylight during working hours, near Piccadilly Circus in central London. In the cold winter weather, with people shuffling on footpaths and across the street, nobody looked up or around as they were unaware of shots being fired. So De Lisle and the Wilkes gunsmiths knew that the suppressed muzzle report was imperceptible.

These firearms incorporated De Lisle's principles for 'silencing' a firearm, more fully de scribed in De Lisle's Patent Specifications. The .22 rimfire experimental has a barrel length of about 7.5-in., enclosed in an outer casing. The muzzle is flared into a "German nozzle" so as to induce the gasses to follow the curve; the baffles form a spiral in order that the gasses be circulated.

W.G. De Lisle's personal .22 RF Browning is considered the first prototype; it and a Sterling .45 De Lisle Commando Carbine were purchased by the author in 1981 from Godfray De Lisle, along with related records and memorabilia. They were eventually passed on to the National Army Museum in Chelsea, London, as there was no way under existing British or Australian firearms laws that these items could be held or owned by an individual collector.

The overall length of this experimental carbine is 29.3 in., and the action has been slightly modified by the addition of weight to the breech block for the purpose of retarding the bolt opening; this consists of an enlarged thumb grip on the cocking piece. This particular rifle is fitted with a Great War vintage surplus Periscopic Prism Co. telescopic sight, set up on overhead mounts. On the left side of the receiver is engraved "DE LISLE SILENT AUTO".

579,168. Gun silencers. LISLE, W. G. De. May 8, 1943, Nos. 3756 and 7964.
[Class 92 (ii)]

Relates to gun silencers of the kind in which baffle plates in the form of spiral discs 50 are arranged in a tubular casing 14 spaced eccentrically round the gun barrel 12 to cause the gun gases to swirl about an axis that is offset from the path of the projectile which passes through eccentric perforations in the plates. According to the invention, the baffle plates situated towards the front of the casing have each a radial slit, the portions on adjacent sides of the slit, Fig. 4, being bent to lie at opposite sides of the general plane of the disc. The casing 14 extends rearwardly around the barrel to form a rearwardly-closed expansion chamber x between the muzzle and the gun receiver. To prevent the formation of a partial vacuum at the gun muzzle, a muzzle attachment comprising a flared nozzle 62 and a rearwardly-extending shield 66 is provided, the shield masking a number of gas escape holes 70 formed in the gun barrel. The discs 50 are supported on rods 40 and the peripheries of the discs are spaced from the interior of the casing, the front flat disc 56 having holes providing front openings at the bottom. In a modification shown in Fig. 7, a front group of spiral plates 50 is combined with a rear group of flat plates 72, 74, 76 and the interior of the rear portion of the casing is provided with a liner in the form of sound-deadening material 82 enclosed in a thin metallic sheath.

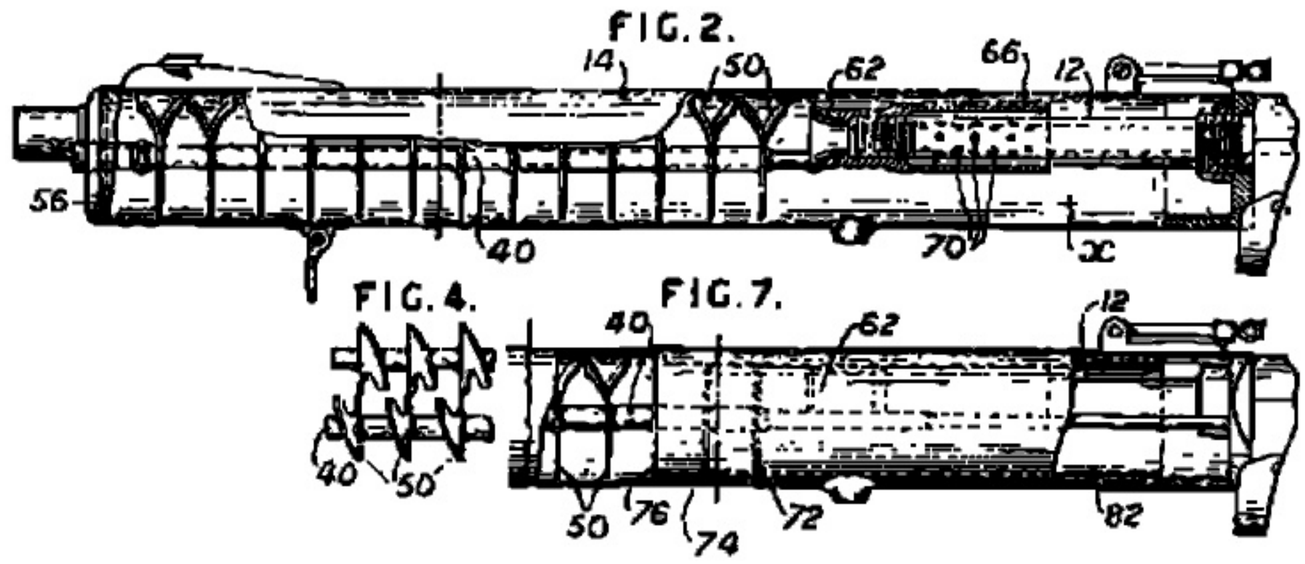

PATENT ABRIDGEMENT — GROUP XXI

Oddly enough, the main field testing of this exercise in silencer design was in quietly despatching small game on the Berkshire Downs. At this time, food rationing was in operation and the game meat ended up on the De Lisle dinner table, a most welcome fare.

Another close friend of De Lisle was Stanley Hand, a director of the United Development Associated Plastics Ltd. at the Plasticraft Works, High Wycombe and Major Sir Malcolm Campbell of Combined Operations HQ had approached UDAP about the possibility of manufacturing plastic bullet-proof shields. This project was unsuccessful but in the course of conversation with Campbell, Hand mentioned De Lisle's silent rifle. Campbell expressed interest for a military application in covert operations and he requested a meeting with De Lisle. Sir Malcolm and son Donald later achieved international fame for successive land and water speed records with their 'Bluebird' machines.

Not long after meeting Campbell, De Lisle brought the carbine to London for examination and its likely first, though albeit unofficial, test was being fired from the Adelphi building into the River Thames. The low sound levels were confirmed by the inattention of those passers-by on an otherwise normal working day in London. The assembled personnel were quite impressed with its performance and Campbell requested a 9mm model be fabricated. Principally because of the 9 x 19mm cartridge ballistics, De Lisle advised against this, but as the 9mm round was already in service, Campbell insisted.

When Sir Malcolm Campbell first inquired about a military application, De Lisle suggested the US .45 ACP round, but Campbell insisted on 9mm due to service availability. Attempts to reduce bullet velocity below the speed of sound by drilling holes along the barrel resulted in jacket shavings peeling off. De Lisle also considered the lighter, reduced velocity 9mm had poor stopping power. Only one 9mm experimental model was reportedly assembled; De Lisle said that he carried out the conversion at Bapty's workshop. A Remington sporting rifle action was used but De Lisle considered the project unsuccessful so it was scrapped.

After the demise of the 9mm experimental project, De Lisle assembled a .45 version at Bapty's London workshops. The .45 A.C.P. round was sub-sonic and the heavier projectile

has better muzzle and residual energies, or "knock-down power". Upon completion of this model, it was submitted to Campbell for practical testing, from which it emerged successfully. This particular weapon was eventually presented by De Lisle to Mark Dinely for the Bapty firearms collection. Tests with this, the first .45 De Lisle silenced carbine, were conducted on the seashore. At distances over 50 yards, the sound was unlike that of a firearm being discharged and it was paid scant attention by casual beach-goers. Even on a dark night, no muzzle flash could be perceived when the suppressed carbine was fired.

As a result of the successful initial tests, Campbell asked De Lisle to assemble a small number of carbines for use by commandos in raids on the French coast. De Lisle wanted to make these at Hollands or Bapty's but Campbell insisted they be made up at the Ford Dagenham factory just outside London. Sir Malcolm Campbell was on the board of directors of Ford and perhaps felt he would have more control over the security and manufacture of the carbines as they were being produced for Combined Operations.

Seventeen .45 prototype carbines were made at Ford Dagenham using reject SMLE actions and butts. De Lisle was assisted by two of the factory foremen and machining was done in the Ford toolroom with the assembly being effected in the manager's ARP dugout. Barrels were converted from Thompson sub-machine gun spares; there are quite a few differences between this Ford prototype batch and the ensuing Sterling production models.

Quite obvious difference are the sights, muzzle, fore-end and short magazine guide. The silencer case is phosphated steel whereas the Sterling model is alloy. The foresight is an SMLE blade set in a ramp and the protecting wings have holes to admit light onto the foresight, reminiscent of the .303 Pattern 1914 rifle. The backsight is a simple 'V' notch with sliding stepped ramp to adjust elevations, similar that found on many Winchester sporting rifles. The illustrated Ford model is marked 'THE DE LISLE COMMANDO CARBINE' along the top of the silencer jacket, along with the firearm's new serial number.

An unserviceable Mk III SMLE rifle was used for this particular conversion and only the original Lee-Enfield butt, action and rear portion of the fore-end were retained. The charger bridge was removed and a long ejector fitted into the left side of the receiver with the nib projecting into the bolt way. The new .45 calibre barrel extends for more than 2-in. into the original boltway, necessitating a shortened bolt body. Due to the use of a rimless cartridge, the face of the bolthead has been recessed and a special extractor fitted.

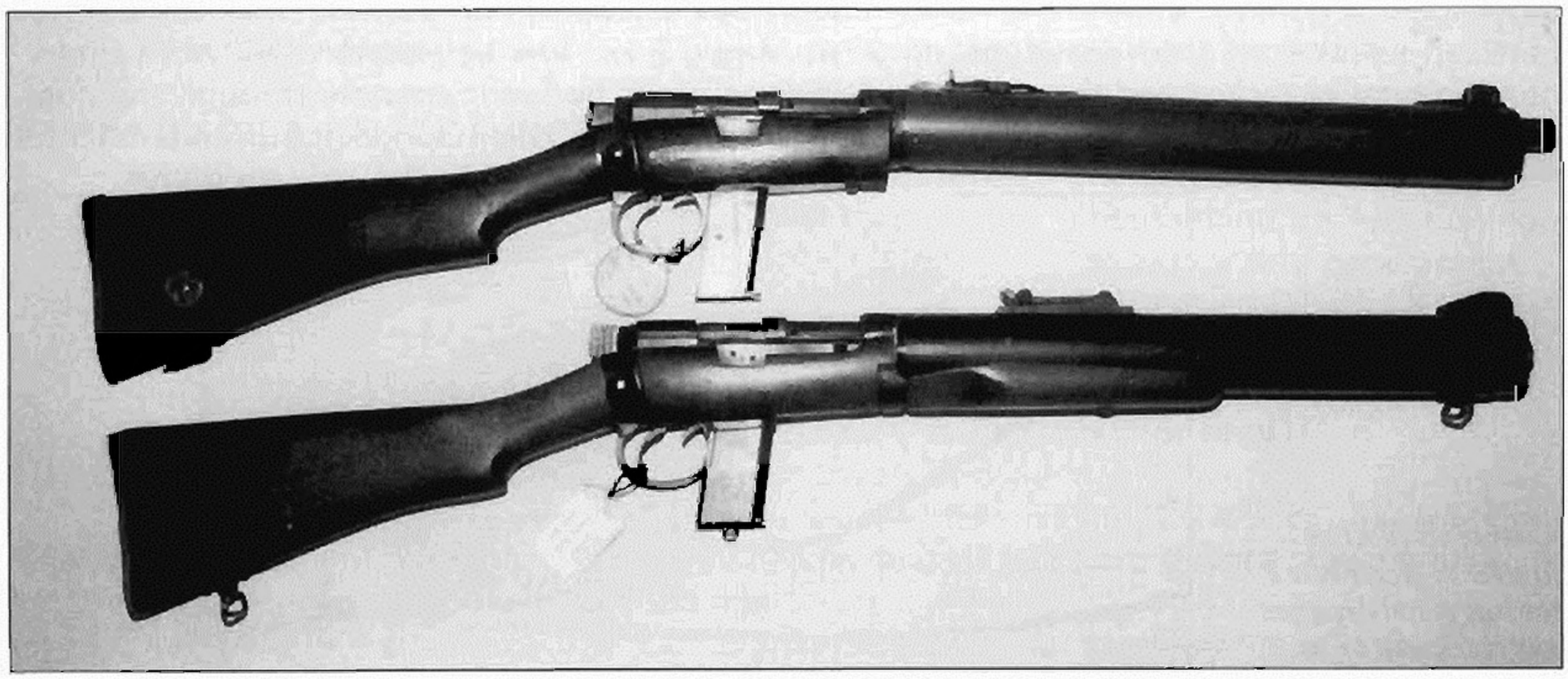

Ford Dagenham model (top) with fore-wood missing, compared with Sterling production (bottom). MOD Pattern Room

The magazine is that of a US Model 1911 Colt automatic pistol, modified in that a rib has been fitted onto the back so as to engage the original SMLE magazine catch. A slight modification has also been effected to the magazine lips and platform. A plate was inserted into the original magazine way, attached to the SMLE trigger guard, and a casing extends for about 1-in. below the sheet metal plate and acts as a guide for the magazine. The original SMLE safety catch was retained.

Specifications of the prototype carbine are—

Calibre:	.45-in.	*Weight:*	8 lb. 4.75 oz. (3.9 kg)
Cartridge:	US Colt Auto Pistol	*Overall length:*	37.2 in. (946 mm)
Rifling & twist:	6 groove, L.H.	*Effective brl length:*	7.25 in. (184 mm)
Magazine capacity:	7 rounds	*Sighting radius:*	13.6 in. (338 mm)

These were put straight into action by Combined Operations in demolition raids on the French coast, mainly used to take out sentries. As the carbines were special orders for Combined Operations, they were not logged in the general service ordnance system.

De Lisle's work in the Ministry of Aircraft Production continued through the war and he was responsible for a number of improvements in aircraft and aero engine design. Patents taken out in this particular field were No. 562,391 of 1942, and Nos. 3,756, 7,964 & 16,453 of 1943. Later inventions included the Wandsworth 'Bunnie' incinerator, a garbage disposal unit and a self-opening ventilation fan. A less publicised design of William G. De Lisle's was his remote trigger mechanism for a 'secret agent' waist-belt pistol.

During the earlier years of the war, as a firearms enthusiast, Godfray De Lisle often visited the Wilkes Bros. at their Beak St., Soho gunshop and on one of these occasions an officer from the War Office came into the gunshop with a rough pattern for an undercover belt pistol with a remote, hand-operated triggering mechanism. De Lisle offered to improve the pattern and build some models and he assembled about 24 during a bout of bronchitis whilst on a few days sick leave. He recalled making them up in his dressing room using a few small handtools, suitably attired in pyjamas and dressing gown.

The waist belt pistol comprised a Colt .32 auto pistol mounted onto a steel plate fitted onto a service webbing waist belt. The rig was then positioned on the right side of the wearer's body and a Bowden cable run from the pistol trigger to a remote trigger on a brass ring worn on the finger. The external trigger could then be operated by the thumb. Wilkes assembled a number of these units for covert operations in Europe; one was used at the partisan assassination of Heydrich on 27th May, 1942. The belt pistol was worn underneath a coat or jacket and the concealed weapon could be fired remotely through the coat, even with shooter's hands placed on his head or raised in the manner of surrender.

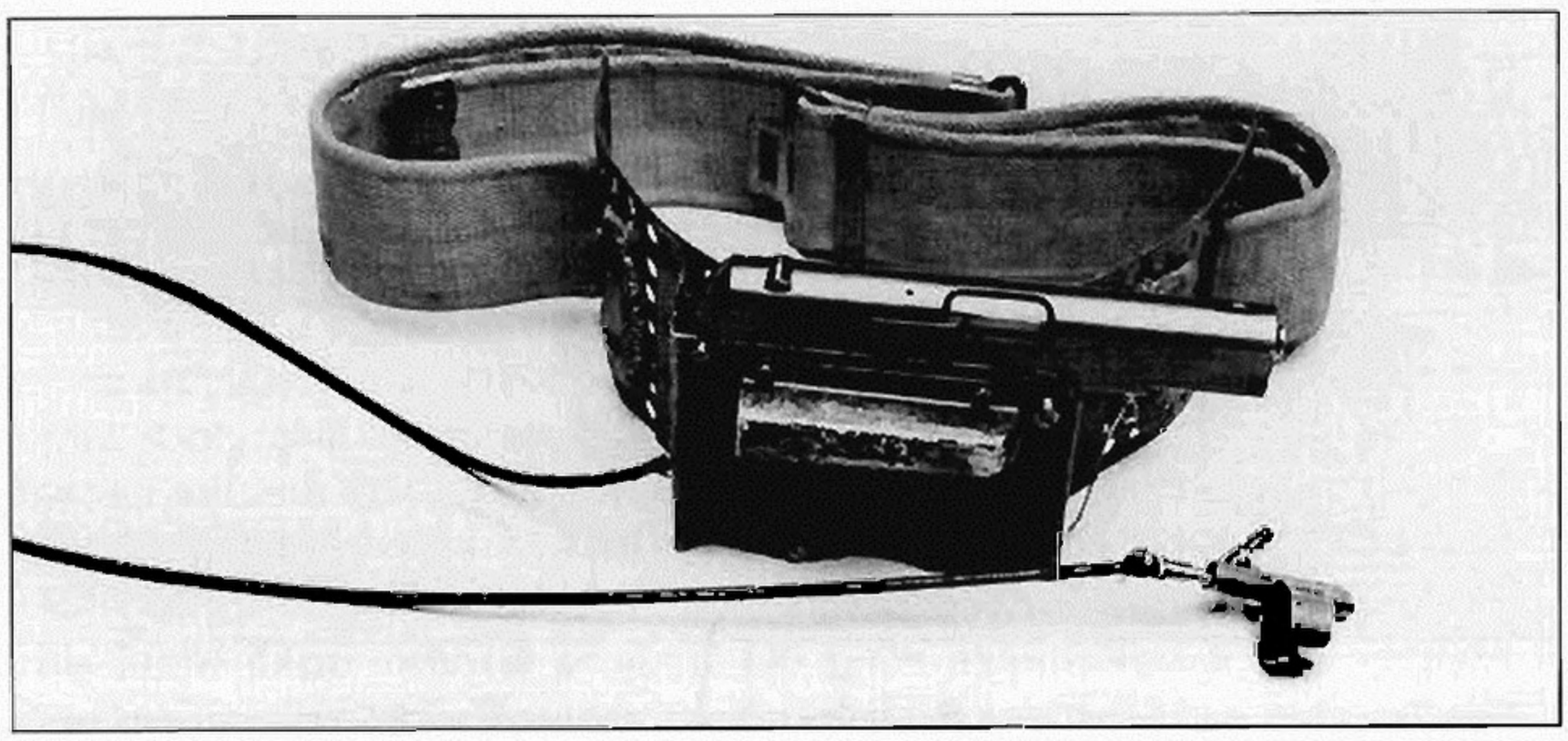

Another clandestine firearm of World War 2, the belt pistol designed and fabricated by Mr. W.G. De Lisle.
MOD Pattern Room

W.G. De Lisle notified the Ordnance Board of his carbine and a sample forwarded to Cheshunt for preliminary trials on 29th May 1943 was returned to Campbell at the HQ Combined Operations on 31st May, 1943. A few months later, De Lisle was interviewed by members of the Ordnance Board and he brought two of his carbines to the meeting.

Personnel present: *Mr. W. G. De Lisle* *Colonel Burchett (CEAD, Small Arms)*
Colonel Lugard (O.B. Chairman) *Captain Roberts (I.S.R.B.)*
Major Parsons (O.B.) *Captain White (A.3)*

Mr. De Lisle produced two weapons with silencers--

1. 0.45 inch CARBINE (SILENT) — based on the No. 1 Rifle

Butt and action: No. 1 rifle with shortened bolt, modified bolthead, ejector, &c.
0.45-in. barrel (c. 8 in. long) fitted with face of the barrel about halfway along the body so that a shortened bolt is required. An adaptor for the 0.45-in. Colt SL pistol magazine fits into the rear part of the normal magazine opening. The silencer is about 2 3 inches in diameter, approximately 15 18 inches long.

Other details—

Accuracy:	*2-in. group at 50 yds. (claimed).*
Sights:	*Radial backsight on silencer, barleycorn foresight.*
Bayonet:	*Can be fitted.*
Flash:	*Nil (claimed)*
Noise:	*Inaudible at 50 yds. (claimed)*
Weight:	*Approx. 7 lb.*

2. .22 inch SELF LOADING CARBINE (SILENT)

Very well made commercial type weapon, with magazine (tube type) in butt.

Barrel:	*Approx. 7½ ins.*
Silencer:	*Approx. 12 ins.*
Scope:	*Fitted with large No. 32 type scope above barrel, no iron sights.*
Flash:	*Nil (claimed)*
Noise:	*Slight mechanical noise.*

On 12th January, 1944, De Lisle was advised that trials had shown promise and further tests were to be carried out at Cheshunt. Three reports were tabled on 21st January-

1. Functioning & Accuracy Trials -- Chief Inspector Armament, Woolwich
2. Noise Measurement Tests National Physical Laboratory
3. Velocity Measurements — Chief Superintendent Armament Research

REPORT BY C.I.A./ W. OF FUNCTIONING & ACCURACY TRIALS. 11/1943

Weapon:	1 De Lisle Carbine	*Accessories:*	1 Magazine
Ammunition:	.45-inch W.R.A.	*Object:*	Test carbine for functioning, accuracy and penetration.

Details:

A. Functioning: Fire 20 rounds horizontally and 10 round each at 80 degrees elevation and depression.
- The carbine functioned correctly with each shot fired.

B. Accuracy: Fire 3 x 5 round diagrams, over cover, at 30 yds.
- Not quite up to standard -- groups of 4¾ x 3 in., 3 x 4¼ in., 3¼ x 1¼ in.

C. Penetration: Fire 5 rounds into 1-inch pine boards supported vertically parallel to each other and 1 inch apart.
- On average, the rounds penetrate five 1-in. deal boards or a solid block of first quality pine 3 in. thick.

REPORT BY N.P.L. ON COMPARATIVE MEASUREMENTS OF NOISE OF SILENCED ARMS

Weapons: Mk 1 Sten (unsilenced) 21/12/43
Mk 11 Sten (silenced)
De Lisle Commando Carbine (silenced)
Ammunition: 9mm Mk 1z 1942
.45 Auto Remington
Noise Measurement at 35 yds by NPL noise meter.

Bullets fired through velocity screens		average (phons)
	Mk I Sten (unsilenced)	117
	Mk II Sten (silenced)	91
	De Lisle (silenced)	95
No screens:	Mk II Sten (silenced)	89.5
	De Lisle (silenced)	85.5

The velocity screens were found to significantly increase the sound level of the De Lisle carbine, probably due to greater calibre and higher velocity of the bullet. The results without the screens were a more realistic comparison for field conditions.

REPORT ON VELOCITIES 21 12 43

Ammunition: 9mm Mk 1z 1942
.45 Auto Remington
O.V.'s at 15 ft. recorded by Weibel chronograph.
Average of 6 readings:

Mk I Sten	1117 fps
Mk II Sten silenced	731 fps
De Lisle	865 fps

The Mk II Sten was fitted with the Welsilencer (ISRB). The 9mm ammunition used was 1942 Mk 1z and gave lower velocities by about 250 fps than current types. This would mean an increase in the noise level of both Sten guns, appreciably magnifying the difference between the Sten guns and the De Lisle.

The De Lisle showed sufficient promise to warrant further trials, so on 19th February 1944, two carbines, Nos. 1015 and 1002, were tested at Cheshunt for accuracy and silencing against the Mk II (S) Sten. The De Lisle proved to be less noisy and gave a best 5-shot group at 20 yds of 1¾ x 1 in., compared with a best of 4 x 2½ in. for the Sten.

Next was the 5,000 round endurance trial, testing group size each 500 rounds. Barrels were cleaned and well oiled every 1,000 rounds, but the silencers were not dismantled or cleaned throughout the trial. Again, the De Lisle was tested against the Sten, but this time both the machine carbines were silenced models; the Mk II fitted with Wel silencer and the Mk II (S). Minor adjustments were required to the De Lisle extractor and firing pin protrusion, while the Wel silenced Sten gave continual double taps which resulted in the silencer assembly being fitted to a new gun after 2,500 rounds. The Mk II (S) was fitted with a new sear at 500 rounds and at 3,500 rounds the sealing felts were replaced as they were completely charred. The De Lisle carbine used in these trials was gun number 1002.

Ten shot, 35 yd. group sizes ranged between 1¾ x 2⅝ in. and 8 x 8½ in. for the De Lisle, until about 4,500 rounds, when they went wild due to the first baffle being struck and bent. Comparative group sizes for the Welsilenced Sten were between 2½ x 2¾ in. and 4¾ x 9 in., and 2 x 3 in. to 20¼ x 13¾-in. for the Mk II (S).

Upon examining weapons after the trials it was found -

De Lisle: Heavily coked up and impossible to remove the outer casing, deposits of carbon 1/16-in. to 1/8 in. thick on baffles, venturi and barrel.

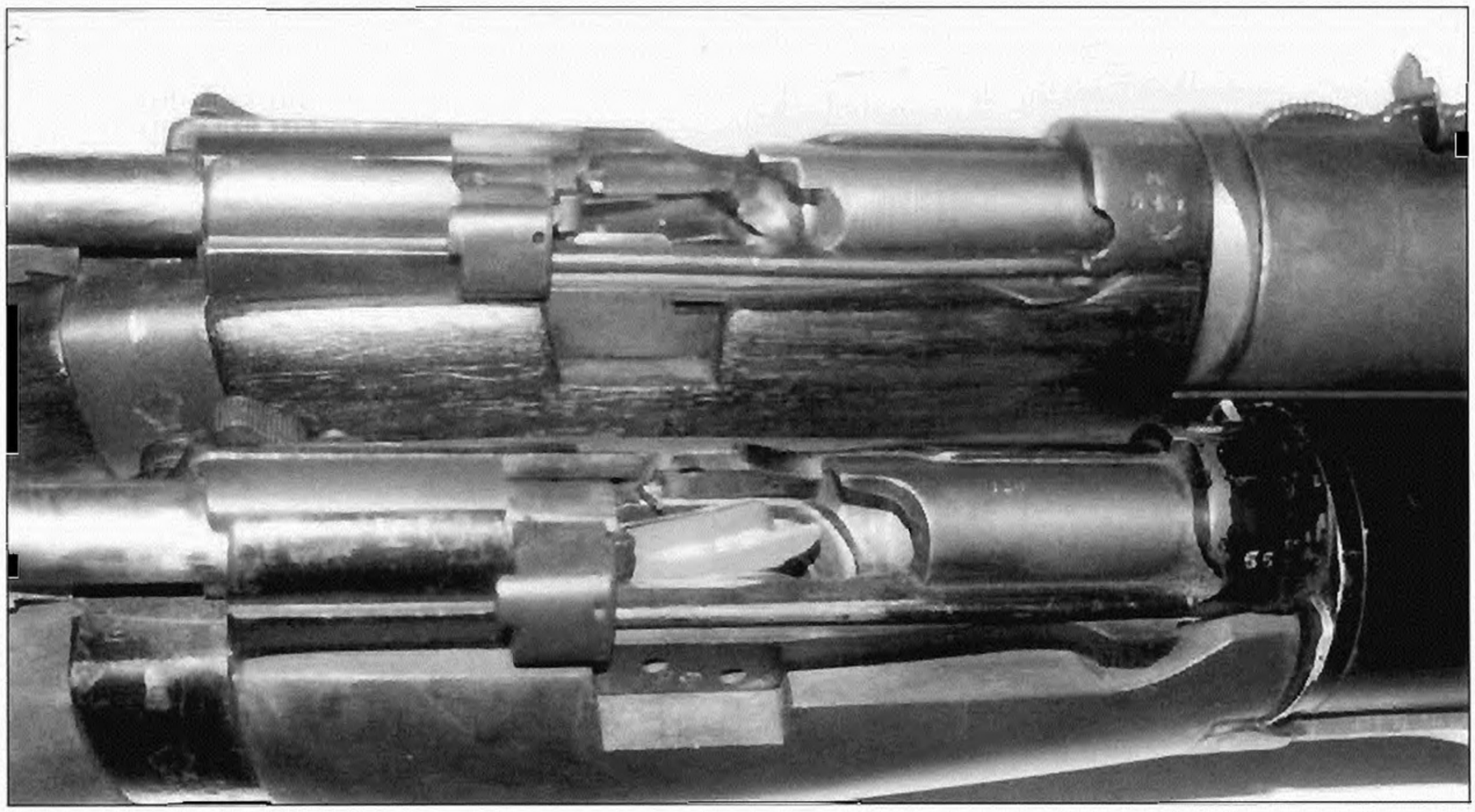

Ford Dagenham conversion (top) with Sterling Engineering model at bottom; Sterling version does not have charger guide rivet holes filled. Note serial number 129 on the barrel and in charger guide recess. M.O.D. Pattern Room

Wel-silencer: Stripped easily and carbon about .05-in. thick on baffles. Rubber seal at front slightly charred and evidence of baffles being hit by bullets.

Mk II (S): Barrel and 13 baffles easily removed, but remainder impossible to remove. Baffles and barrel more heavily coked than Welsilencer, but not as heavy as De Lisle. Sealing felts completely charred and unserviceable.

Further noise measurements were carried out on 3rd May 1944 by the National Physical Laboratory with the De Lisle against the unsilenced Sten Mk II and Sten Mk II (S). Problems were encountered with damaged baffles again and the De Lisle results worsened as the sound baffles became more damaged. At first, the Mk II (S) Sten performed more quietly than the De Lisle but noise levels increased as the felts became charred. De Lisle carbine No. 1015 was used in these particular trials.

Because of the confidential classification of the De Lisle, patents were not taken out until official approval was given. On the 23rd March 1944, permission was granted for application of patents in the United States and Russia. The British patents had been applied for in 1943 and De Lisle's listed 43 Belgave Road, London SW1 address was a security blind.

Both De Lisle carbines in the last trials were damaged so the Ordnance Board requested that Mr. De Lisle supply more for further tests. There were none to be had as the remainder of the first batch were in service in commando raids organised by COHQ. So De Lisle requested the return of guns No. 1002 and 1015 to rebuild them into one working carbine.

Two more were ordered as new trials were proposed with a silenced US M3 and the Sten. By August 1944, the De Lisle was in production by Sterling Engineering Co. Again, the production order was for Combined Operations, not directly accessible by or responsible to the usual ordnance channels. So the Committee placed an order for two additional carbines from Sterling. This contract was dated 6th October 1944, but cancelled on 16th November when two were made available from the COHQ contract.

Stripped Sterling Engineering De Lisle carbine with casing and baffles disassembled. M.O.D. Pattern Room

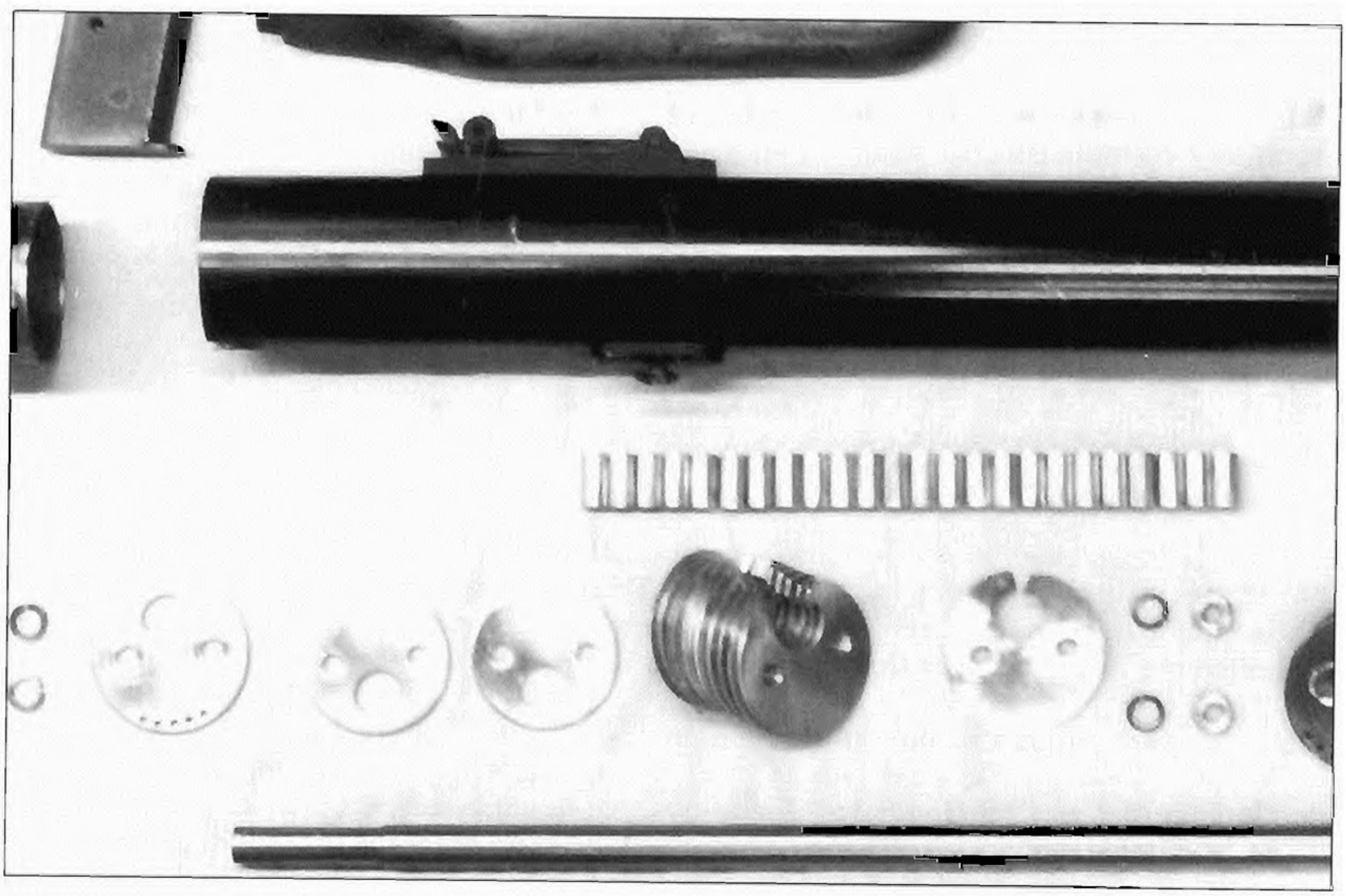

Close-up of metal baffles, spacers and casing with Lanchester type sight. M.O.D. Pattern Room

The Sterling contract for 500 (294/XM/K.942 Con. XM dated 16/11/1944) was cancelled on 20th December 1945, before completion. Only 106 carbines were recorded from the Sterling contract but a few more were assembled later which took total production to about 130. When the contract for 500 carbines was set, it was proposed than serial nos. 451 to 500 be Airborne models with folding stocks; only one or two prototypes were fabricated.

Carbines nos. 40 and 97 were forwarded to the Ordnance Board for trials, delivered in March of 1945 by which time these trials had been cancelled anyway. The reason for this decision was that it was considered more desirable to fit a silencer to the .303 SMLE rifle and use reduced load ammunition, as the Germans had done with the Kar98k.

Commando Carbine serial numbers were marked along the top of the barrel, *e.g.* 'THE DE-LISLE CARBINE C.O.S.D. 2111 S.E.C.O.' COSD indicated Special Operations Executive's Stores Division, 2111 was the contract number, and SECO was Sterling Engineering Co. De Lisle carbine numbers commenced in the 1000 range, hence carbine no. 40 would have been numbered 1040. The Ford prototypes are stamped along the top of the barrel jacket, *e.g.* 'THE DE LISLE COMMANDO CARBINE CAL .45 A.C.P. NO. 1010 PAT. PENDING'.

A Mark II De Lisle Carbine example is recorded, marked on the jacket 'THE DE LISLE COMMANDO CARBINE MK II' above the usual SOE appellation and serial number (the aforementioned no. 1015) with rudimentary flip-over Lanchester Mk I* backsight and protruding muzzle nozzle normally typical of the Ford Dagenham prototypes. No other reference to a Mk II model has been noted and the different style of marking and fittings with non-typical serial number place a question mark at least over this particular example.

Some conjecture exists today regarding the number of carbines made and serial numbers. De Lisle's .22 prototype is numbered 1001, Bapty's prototype was 001 and the Ford batch from 1002 to 1018. It follows that the Sterling carbines commenced at no. 1019 and ran to about 1150 although Laidler in 'Guns of Dagenham' reports a Sterling made carbine numbered 1015 and carbines numbered 2089 or 2090, with matching number bolts. The loss of Sterling De Lisle Commando Carbine records in a wartime German V-bomb fire does not help to resolve the situation regarding serial number anomalies either.

It has been found that special orders particularly, trials and extra-service production, often result in disparate gun serial numbers. Absence of production line normality is certainly a contributing factor to such inconsistencies and the De Lisle carbines were all hand-fitted individual pieces. The finely-made (nominal) one hundred .22 No.5 trials rifles at BSA's Shirley plant late in WW2, normally typical of precise British manufacturing processes, are listed in ICI ammunition trials reports. These show at least four rifles with repeated serial numbers and a total quantity exceeding the 100 order. Sterling's wartime efforts on what was much more hand-fitted using recycled and spare components, is even more likely to exhibit distinct serial number anomalies given the environment.

Regarding new serial numbers stamped on the De Lisle carbines, the example at the MOD Pattern Room, Nottingham, is numbered 129 on the .45 Thompson barrel extension in the boltway as well as 129 on the fore-wood recess where the charger bridge would normally fit. The .303 cartridge charger bridges were removed in the conversion process. Some original .303 SMLE rifle marks are usually evident, including the original serial number on the receiver ring. The MOD Pattern Room example shown here was originally a 1918 BSA, refitted with typical WW2 beech furniture and various scavenged spare component parts. The carbine's new serial number, 129, was also stamped on the back of the bolt handle.

A technical information bulletin (restricted 'in house' ordnance publication) provides a somewhat humorous report of an early testing—

THE TRIAL OF THE DE LISLE SILENT CARBINE

The following account of the trial of this weapon on behalf of COHQ was obtained by the author from a usually reliable source and appears to bear repetition sua sponte. The Source aforementioned states that he was ordered to accompany a Senior Officer of the Senior Service to perform the trials, which were to take place in the presence of the inventor and Sir Malcolm Campbell in the grounds of the latter's estate.

At the conclusion of a series of more or less orthodox firings in which the weapon achieved the necessary standards with some ease, representatives of COHQ were asked whether they wished to see any further tests, or to handle the weapon themselves. The Senior Officer of the Senior Service replied that he would. Upon receiving the piece in his hands he immediately brought it to his shoulder, presented it at one of a number of duck which were feeding on the other side of the lake at a range estimated by the Source at 400 yards, and fired. The duck, less one, thereupon became airborne and withdrew. A small boat was despatched to recover the victim, which was found to have died from a large calibre gunshot wound in the neck. The Officer of the Senior Service regarded it with enthusiasm for a minute or so and then remarked, "I'm rather out of practice, so perhaps it's hardly fair to blame the gun. Actually I aimed at the head".

In spite of the contretemps, the accuracy was considered adequate and the carbine was accepted for service.

This account claims that the inventor was present. During a conversation in 1980, Godfray De Lisle could not recollect such an incident happening at Campbell's Heddingley estate.

While the silent carbine was a successful tool in the commando type operations leading up to D-day and the Normandy landings, its use was very limited in the more conventional warfare that followed. Action in the Far East provided more opportunities for the silent carbine, where battle ranges were often closer due to the jungle and rugged terrain. De Lisle carbines were used in Burma, mainly for infiltration and operations behind enemy lines.

An instance reported by a sniper; was when the De Lisle carbine was used for 'picking off Japanese troops travelling in open lorries behind their own lines'. British teams lay up near the road, well camouflaged, and silently despatched a Japanese soldier in each lorry which passed by. In most cases the lorry would stop, but as no shot had been heard, the Japanese did not know that they had been fired upon, or indeed, even if they had, from whence the attack came. In the reported case, there were two or three such snipers operating along the road and they accumulatively 'bagged three or four in each lorry'. De Lisle carbines were on issue in Malaya during the Emergency and used by a number of regiments including the Gordon Highlanders. There is also reasonable evidence of De Lisle carbines being used in subsequent conflicts by British covert operations groups in various corners of the globe.

During a talk in the open to visiting officers at the FARELF Training Centre, a De Lisle fired 5 rounds within 50 yards of the audience but no one realised that a rifle had been fired.

A good testimonial to De Lisle's carbine is paid in the following report on the effectiveness of German silencers on their 7.92mm service rifle; the De Lisle was for comparison. These thorough tests made use of the widest range of silenced firearms in any trial to date—

- 7.92mm Kar98k rifle with Schiessbecker type attachment silencer, marked "A".
- 7.92mm Kar98k rifle with bayonet type attachment rifle silencer, marked "B".
- .30 cal U.S. M1 carbine (silenced) to C.E.A.D. design.
- .45-inch De Lisle carbine (silenced).
- 9mm Sten Mk 2 (silenced).
- 9mm Sten Mk 6 (silenced).

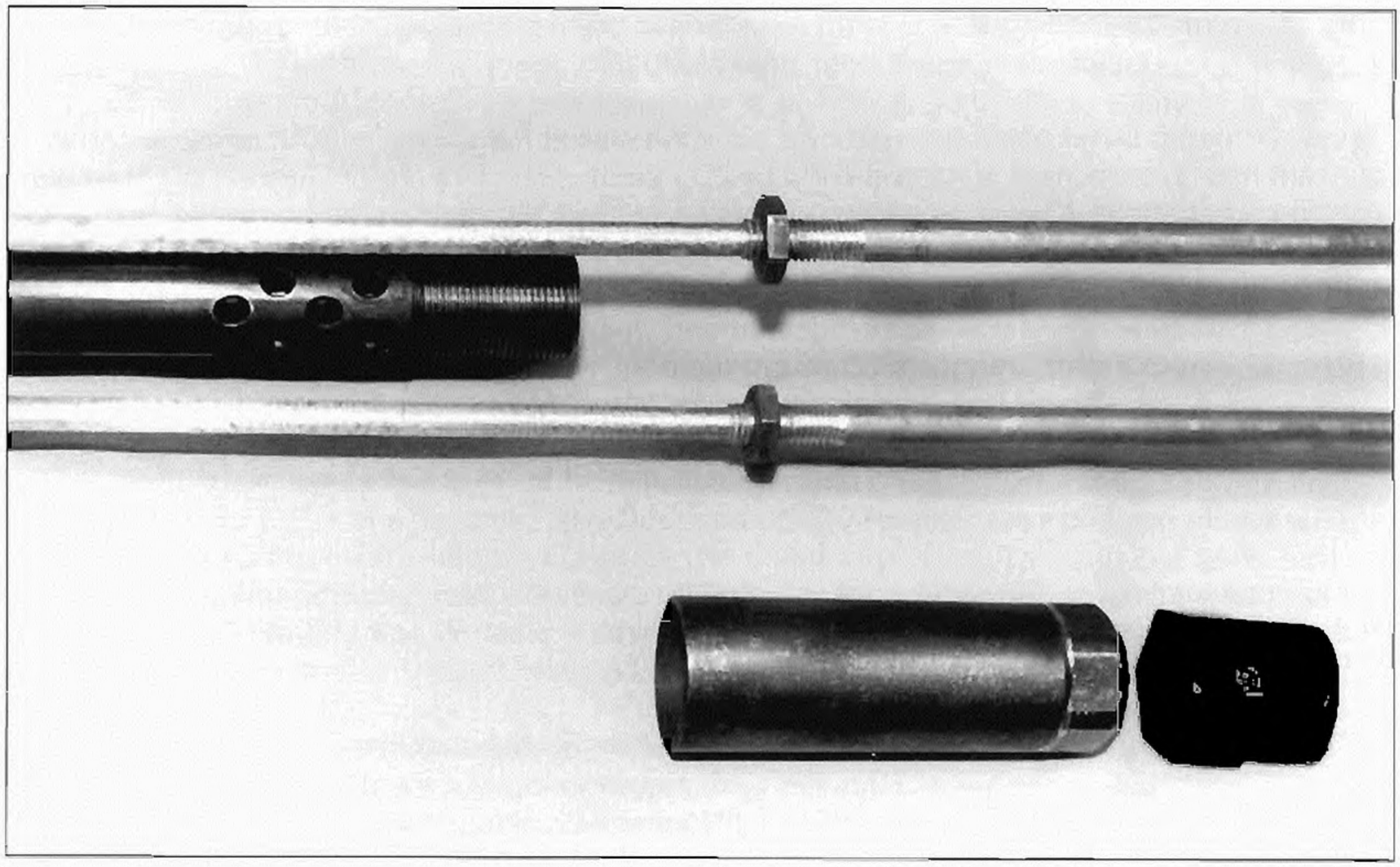

View of internal muzzle with bleed holes and baffle rods, from the underside. The German 'nozzle' attachment for the barrel muzzle has been unscrewed. M.O.D. Pattern Room

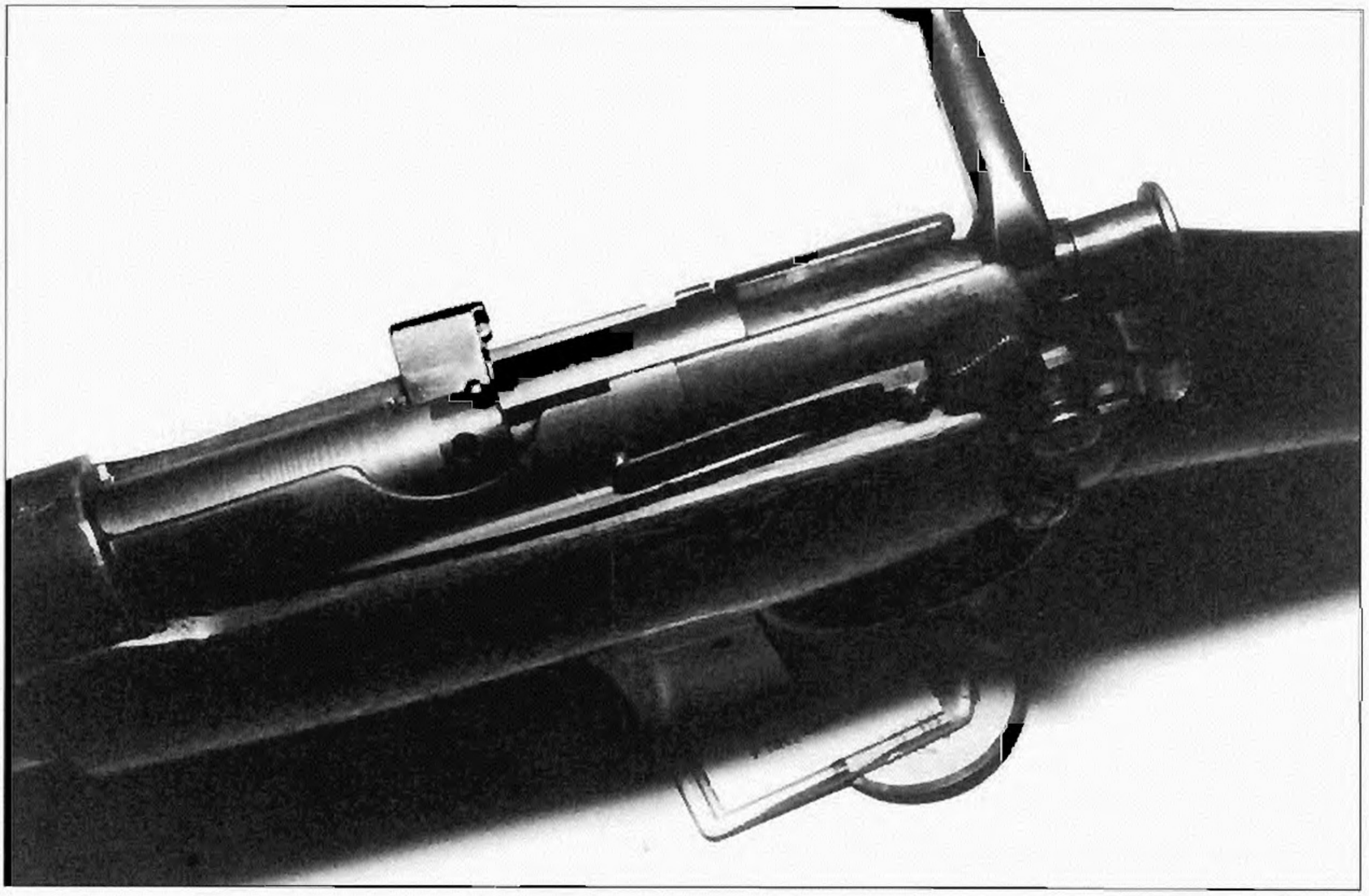

Left action view of De Lisle conversion, note barrel extended into boltway, shortened bolt body, new ejector with nib protruding through the boltway wall, and filled in charger guide rivet holes. M.O.D. Pattern Room

Targets were: 15-inch square x 1mm manganese steel plates.
1-inch deal board box targets (boards spaced ½-inch apart).

Tests compared bullet penetration of deal boards, accuracy and yaw to 200 yards, penetration of 1mm manganese steel plate and RV's to 200 yards. Effective life of German silencers was considered at about 20 rounds so various trials to obtain the required comparisons were combined as far as possible. German silencers were used with special reduced charge ammunition.

TRIAL 1. At 100 yds. range, a 10-round diagram was recorded and velocities measured. A deal board box was placed behind targets to assess comparative penetration.

TRIAL 2. At 200 yds. range, a 20-round diagram was recorded and velocities measured. A deal board box was placed behind targets to assess comparative penetration.

TRIAL 3. With yaw cards at 40 ft., 100 yds. and 150 yds., 5 rounds were fired from each weapon, recording the degree and orientation of bullet yaw.

TRIAL 4. Recording velocities at 90 ft., and 250 yds.

Difficulties were experienced recording velocities with the German ammunition at 200 yds. and with other types at ranges over 200 yds. so Trial 4 was not completed. Trial 2 had to be split into two separate tests, dealt with here as 2A and 2B.

TRIAL 1. Best penetrations were achieved by the .30 M1 carbine and .45 De Lisle, each with 4½ boards. Although the .30 bullet had greater velocity, this was compensated by the heavier bullet of the .45. There was little difference in penetration between Sten carbines, although two types of ammunition were used, Mk 1z and Mk 2z. The German silencers performed worst of all in this test and although Silencer A had a 75 fps velocity deficit at 90 yds. compared with Silencer B, a better performance was obtained from A. The order of efficiency was:

.30 cal M1 carbine	4½ boards
.45-inch De Lisle carbine	4½ boards
Sten Mk 6	3 boards
Sten Mk 2 (S)	2½ boards
German Silencer A	2 boards
German Silencer B	1½ boards

TRIAL 2A.	*100yd diag.*	*200 yd diag.*	*90ft Mean OV*	*190yd Mean OV*
.30 M1 carbine	6 x 5 in.	5 x 15 in.	932 fps	757 fps
.45 De Lisle	17 x 12 in.	24 x 43 in.	871 fps	783 fps
German Type A	17 x 40 in.	8 x 14 in.	824 fps	not obtained
German Type B	8 x 12 in.	24 x 55 in.	851 fps	not obtained
Mk2(S) w/ Mk 1z	18 x 22 in.	16 x 56 in.	938 fps	804 fps
Mk2(S) w/ Mk 2z	12 x 12 in.	30 x 26 in.	981 fps	841 fps
Mk 6 w/ Mk 1z	10 x 19 in.	25 x 53 in.	866 fps	732 fps
Mk 6 w/ Mk 2z	18 x 16 in.	37 x 53 in.	943 fps	801 fps

Regarding accuracy, the M1 carbine gave the best results, especially at 100 yds. An interesting result was the German Silencer A, which gave a better grouping at 200 yds. than at 100 yds. This was probably because the rubber baffles crumbled and eventually blew out, negating the silencing value, but increasing the bullet velocity, accuracy and penetration.

TRIAL 2B. Manganese steel plate penetration — maximum distances.

.30 M1 carbine (S)	10 - 15 yds.
.45 De Lisle	100 yds +
German Silencer A	150-175 yds — due to higher velocities as baffles were blown out.
German Silencer B	Failed to penetrate at 25 yds.
Sten Mk 2 (S)	15 - 25 yds., depending upon ammunition type.
Sten Mk 6	Failure - 25 yds., depending upon ammunition type.

TRIAL 3. Yaw up to 200 yds.
Except for the German silencers, all weapons gave true shots with no accountable yaw. It was noticed that yaw decreased with Silencer A over 100 yds., while Silencer B gave an increasing angle as the ranges became longer.

Concluding remarks were that the best all-round performance was given by the De Lisle which combined fair accuracy with true bullet flight and good penetration of both types of target. The .30 M1 carbine was modified by the CEAD on similar lines to the silenced Sten carbines and although it showed first class accuracy and penetration of the deal board, it failed to penetrate the steel target.

The German silencing attachments employ replaceable solid rubber baffles: Type A silencer with two baffles and a rigid form of attachment and the Type B incorporating three baffles with a floating fit at the muzzle. Yaw experienced with the German attachments was probably due to the interference caused to the bullet in passing through the solid baffles. Silencer Type A was completely worn out after firing 83 rounds, although Type B was still effective at 60 rounds. The De Lisle was most efficient regarding silencing, the Board noted 'the superiority of the .45-inch De Lisle design'.

Production Sterling De Lisle carbine differences to the earlier Ford Dagenham batch are largely cosmetic; fore-end shape, aluminium alloy casing instead of steel and absence of a muzzle nozzle projecting beyond the silencer casing. The Ford model has a different form of foresight protector and backsight.

Similar to the Ford Dagenham prototypes, an unserviceable SMLE rifle was stripped and the butt and action retained. The charger guide was removed and an ejector let into the left side of the body, secured by a screw. The ejector nib protrudes through the receiver wall into the boltway. The trigger guard was fitted with a sheet metal plate across the magazine recess and tubular casing attached to position the modified Model 1911 ACP magazine. On the Ford Dagenham prototypes, this tube extends for only half the length of the magazine whereas on the Sterling, it is full length. An optional 11-rd. capacity magazine was listed for the De Lisle.

The bolt body was shortened to 3.6-in., the face of the bolthead recessed and a modified extractor fitted for the rimless ACP round. Another interesting feature is a small Bakelite insert dovetailed into the underside of the bolt-handle so that the physical motion of closing the breech-bolt might be made more silent. The barrel was modified from a Thompson SMG spare and it extends for nearly 2.5-in. back into the original receiver boltway. The firm of W.W. Greener in Birmingham did the required machining on the Thompson barrels, the effective barrel length being about 7.25-in.

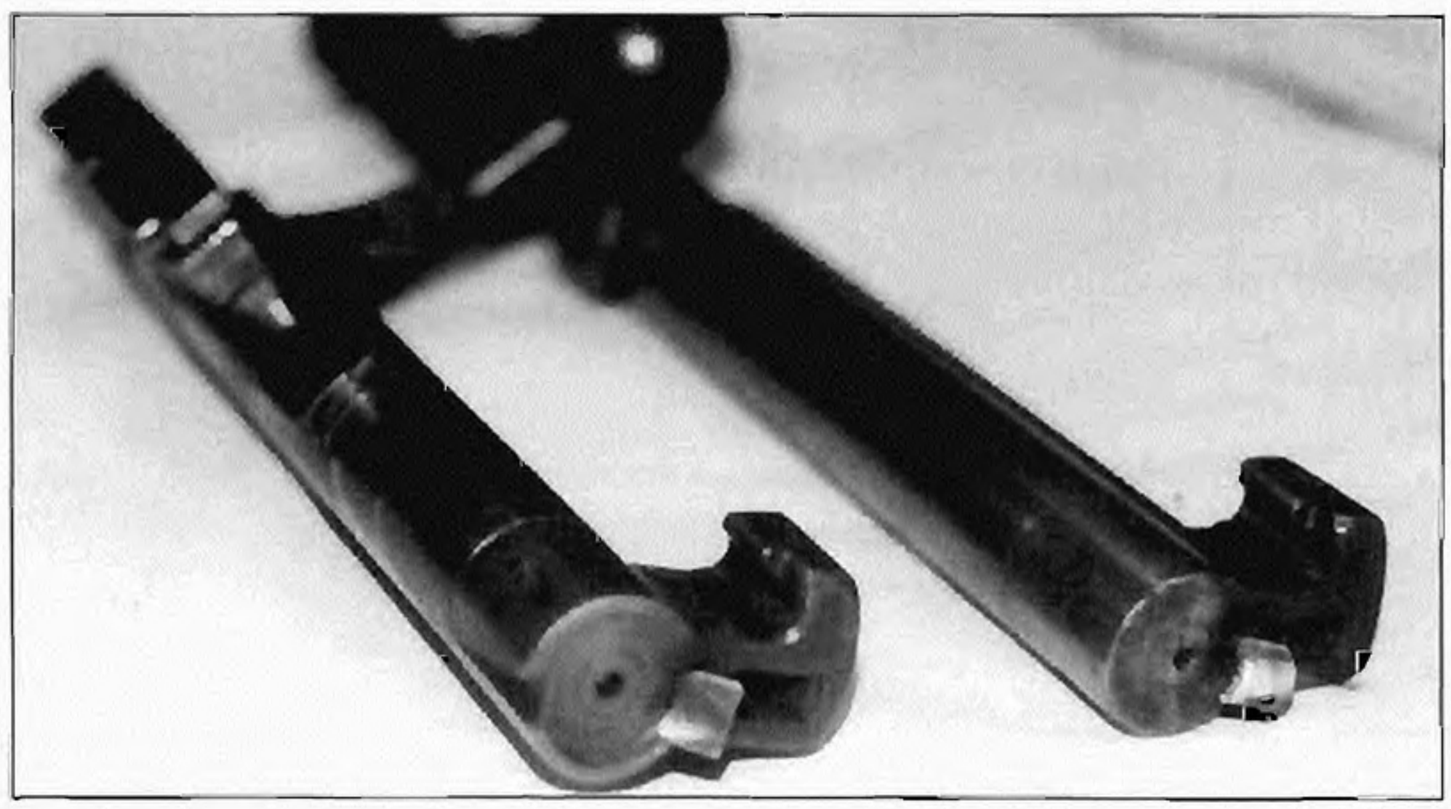

Shortened .45 De Lisle bolt lays alongside an unconverted .303 SMLE bolt for comparison. The bolt-head face of the De Lisle bolt is recessed and a new extractor has been fitted for the .45 rimless ACP cartridge. The modified bolts were re-numbered to the 'new' carbine serial number.
M.O.D. Pattern Room

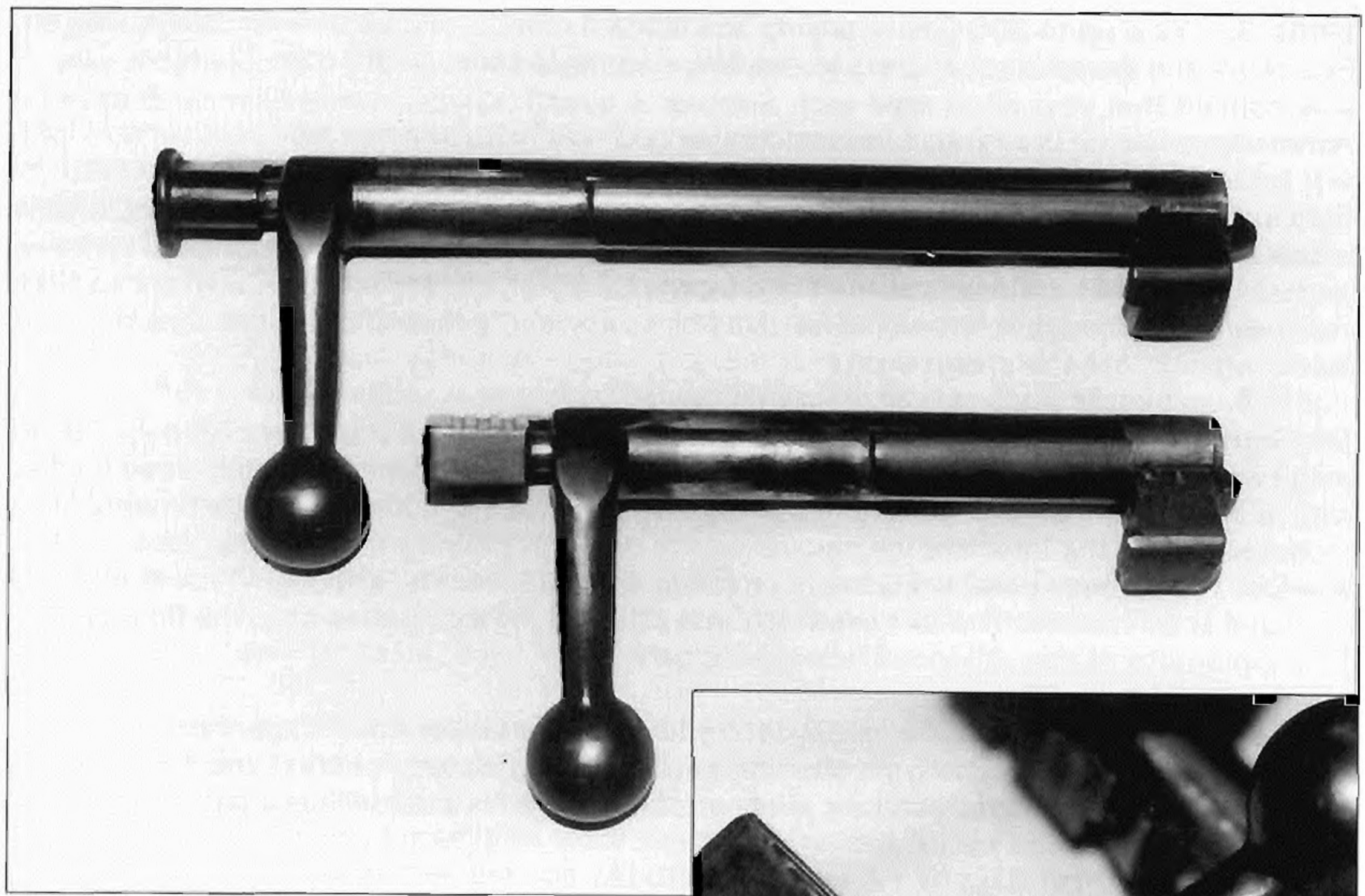

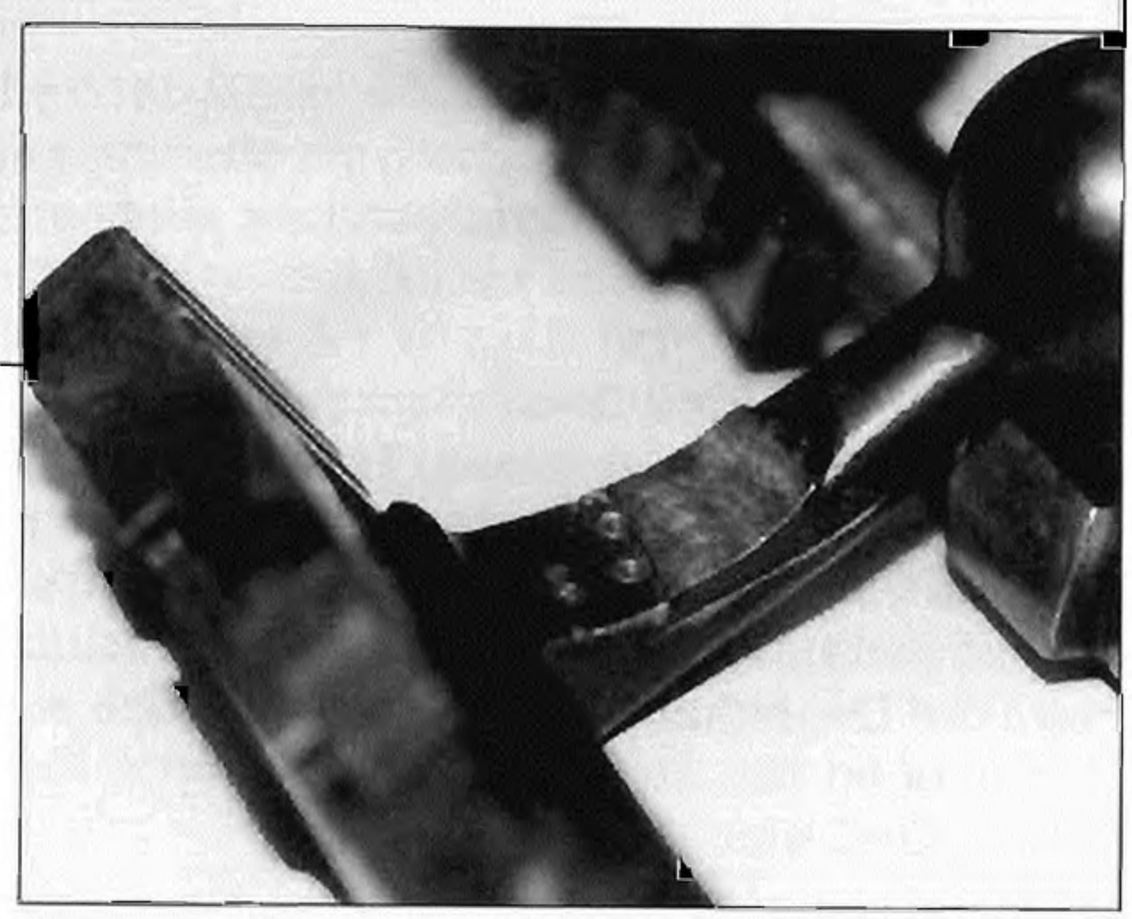

SMLE .303 bolt compared with the .45 De Lisle conversion. The bolt body and firing pin were shortened, a modified bolthead fitted and a Bakelite insert dovetailed into the underside of the bolt handle. M.O.D. Pattern Room

Below— .45 Magazine comparison. From left to right: U.S. Colt auto pistol compared with De Lisle 7 round & 11 round magazines

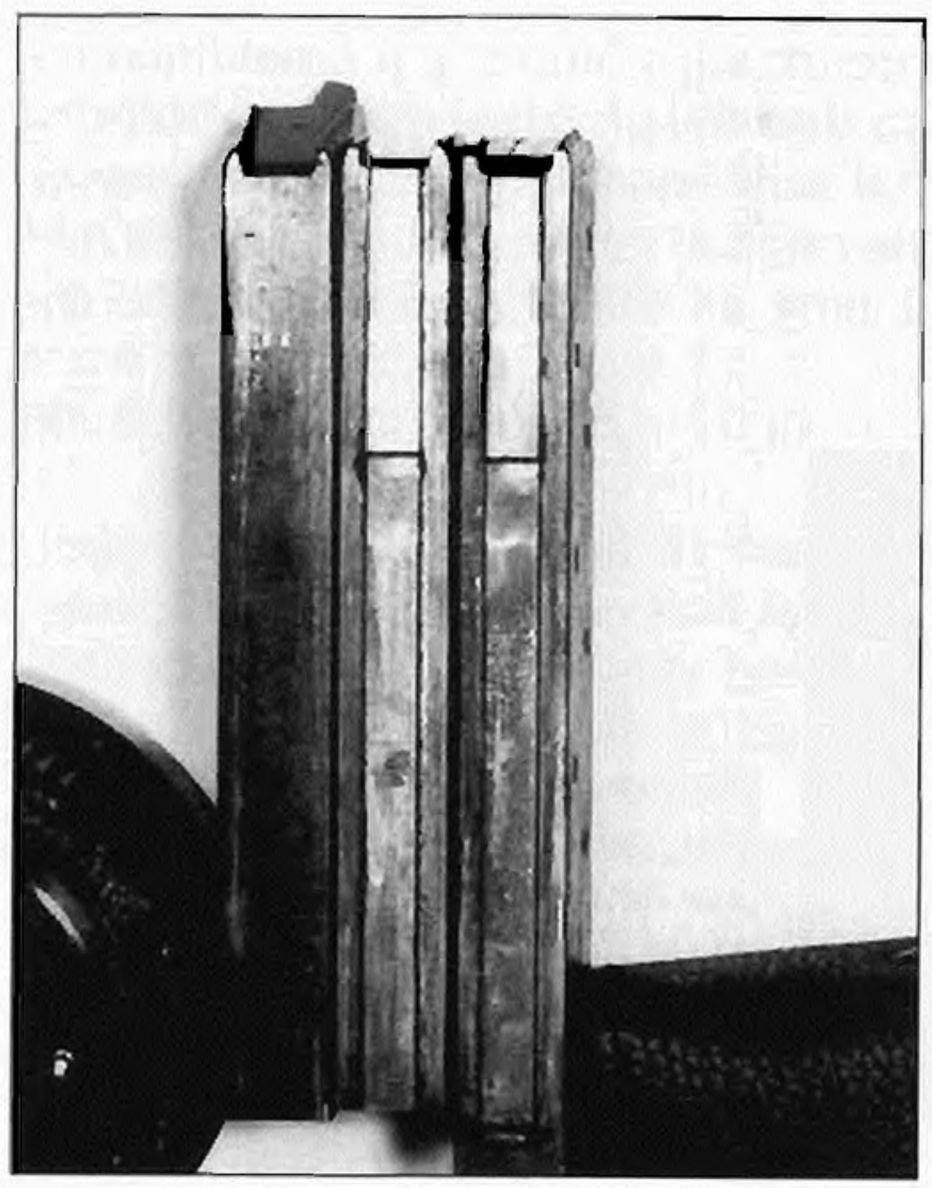

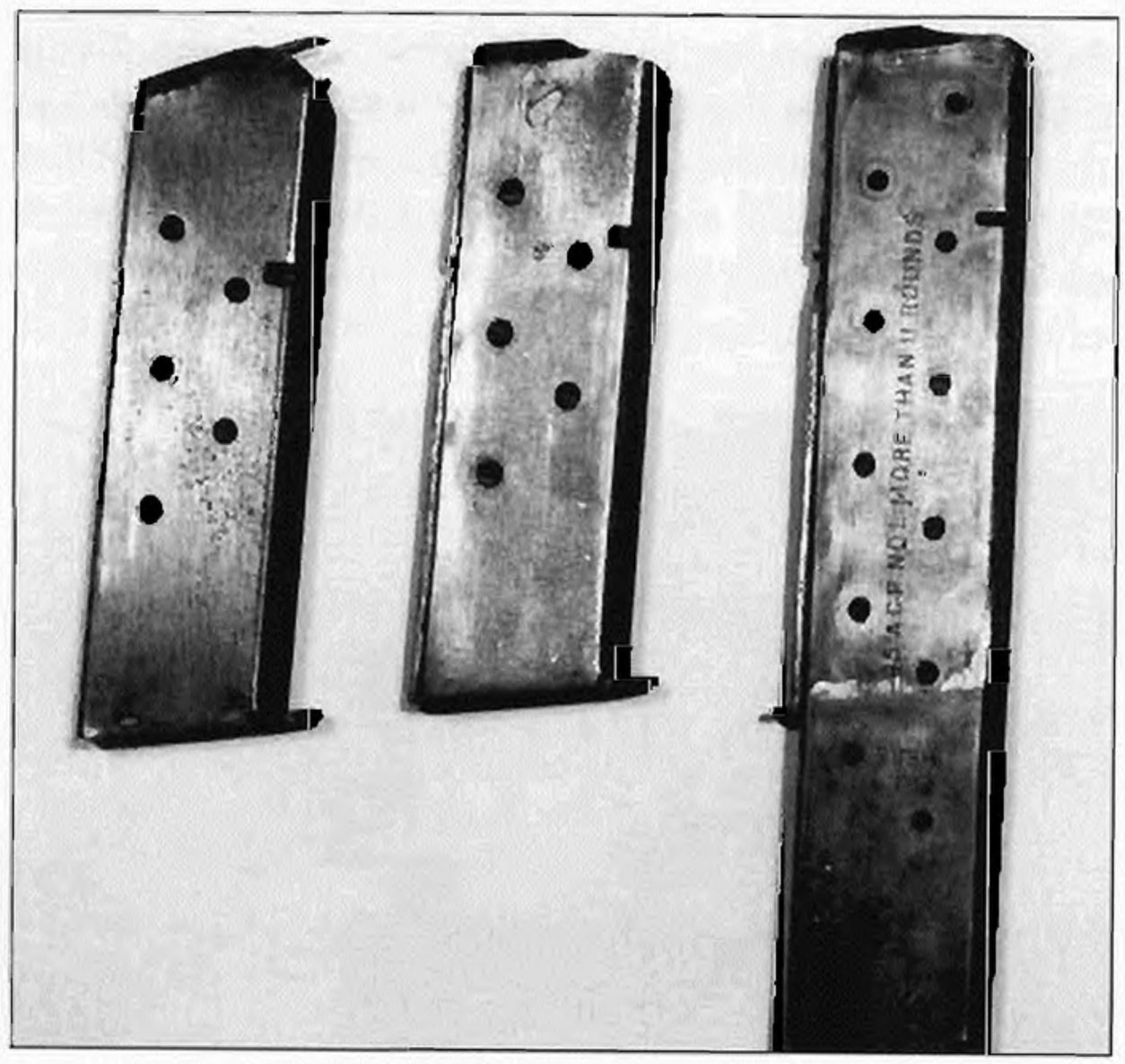

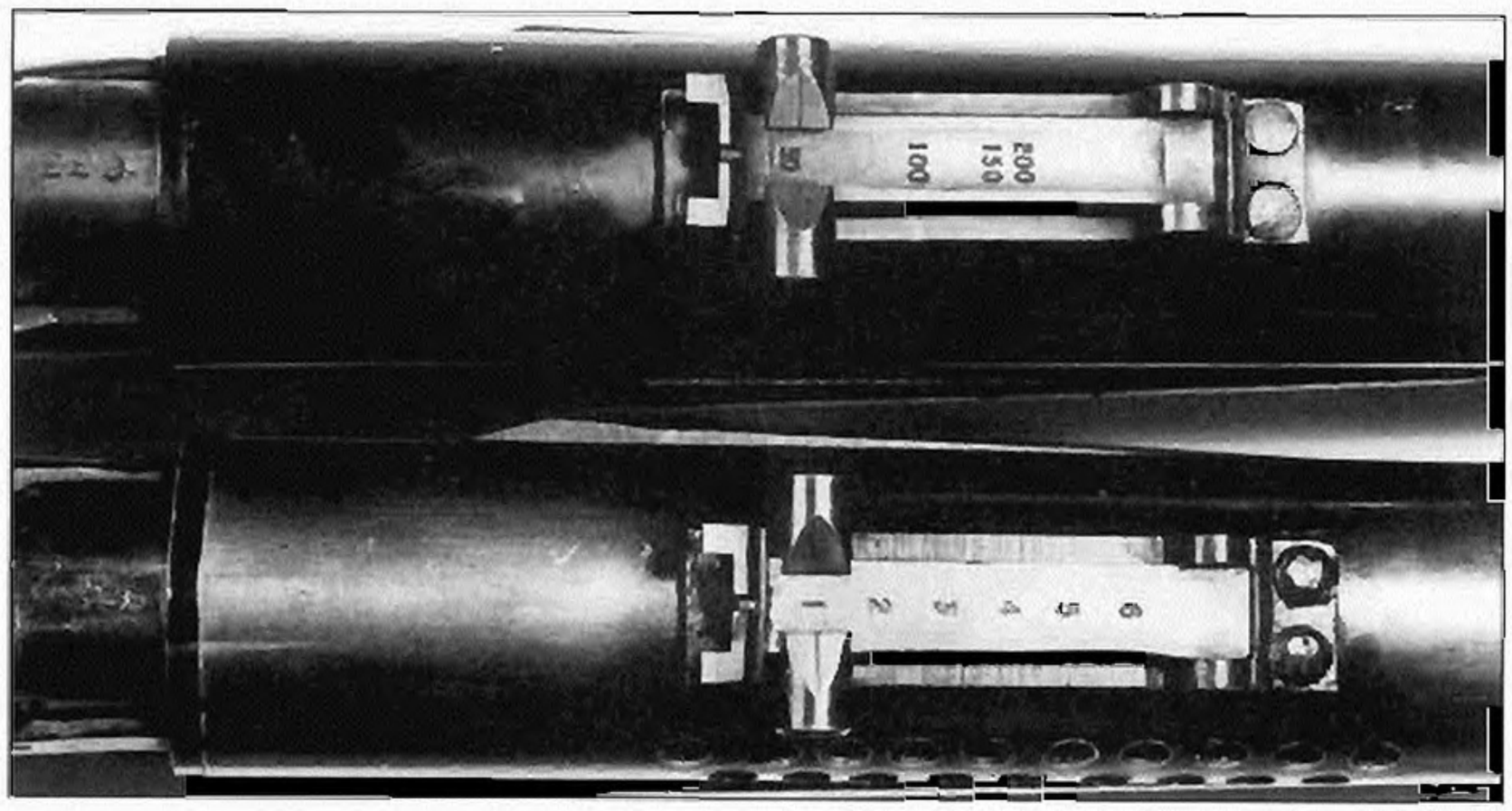

Leaf backsights utilised from 9mm Lanchester machine carbine production. The top sight is usual Sterling model while the bottom sight is an early Lanchester model mounted onto the specimen which was eventually sectionised. Note the difference in yard graduations. School of Infantry Museum, Warminster

The barrel is enclosed within the silencer casing and beyond the true muzzle is an expansion chamber and a series of thirteen duralium baffles which form an interrupted 'Archimedes screw'. These baffles are positioned on two locating rods which align the bullet passage holes of the baffles, and an alloy end cap is secured by two Allen key bolts. A number of small bleed holes are drilled at the bottom of the casing cap for escaping gas.

A leaf backsight, similar to that on the early Lanchester machine carbine, is riveted onto the top of the silencer casing; it is graduated to 200 yds. One prototype carbine has a 600 yd. Lanchester sight fitted. This particular example was later sectionised and so the 'sectionised model' must be considered a 'one off'. The Lanchester SMG was the principal firearm manufactured by Sterling during the war and manufacture and machining of many of the components were sub-contracted, including the backsight. Therefore, utilisation of the backsight unit was quite logical and these are usually found with the marking 'CFM' which indicates manufacture by C.F. Moore & Sons, of Sekforde St., London EC1.

The magazine comprises a US Model 1911 Colt .45 auto pistol magazine with modified lips and a horizontal rib down the back to as to accommodate the SMLE magazine latch. Alterations made to the angle and shape of these lips are evident from the illustrations, as are the SMLE type ribs fixed to the back. A large capacity magazine is also shown here and although it is nearly twice the length of the standard magazine, the capacity has only been increased by four rounds to eleven. Both sides of this particular magazine are marked 'NOT MORE THAN 11 ROUNDS' and 'FILL TO HERE'.

Some other markings are likely to be found on these Sterling made carbines; S129 which was the wartime code for Sterling, and 'SECO' and '129' inside a circle, which again indicates Sterling Engineering Co., Dagenham. Another division of the Sterling group was Sterling Armament at Northampton, which was allocated the wartime code M619. This code may be found marked on many of the Lanchester machine carbines.

A sample De Lisle carbine retained by Sterling Engineering Co. is marked on the left side of the silencer jacket, 'THE DE LISLE CARBINE' over 'COSD 2111 S.E.CO.'. The right hand side of the receiver retains the original SMLE rifle No. 1 markings, which may be of Enfield, BSA, SSA or LSA origin. It is possible that even an Ishapore or Lithgow action body was utilised, although this is less likely. Both the Marks III and III* original action type markings have been noted. Sling swivels are mounted onto the butt in the conventional position, and underneath the front of the silencer casing. A two-piece cleaning rod was supplied in the butt trap, which is about 15-in. long when screwed together. The rear portion of this cleaning rod is of larger diameter as the forward section fits inside it, so as to permit compact storage in the butt trap.

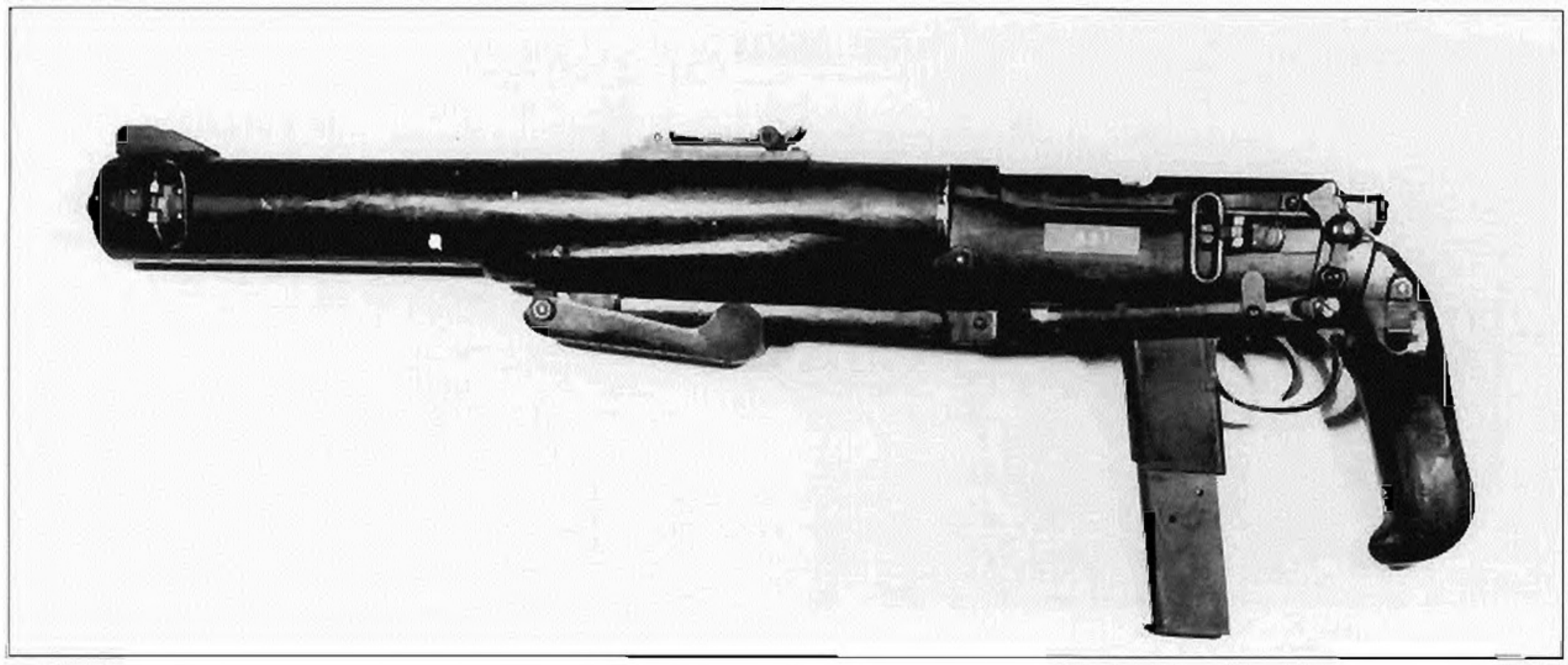

Airborne prototype with George Patchett's folding stock in stowed position. Note the large capacity magazine, pistol grip and fitting of sling swivels on the left side. School of Infantry Museum, Warminster

Another interesting development was the folding stock Airborne model. Fifty of the Airborne carbines were ordered, but never put onto the production line. Only one or two prototypes appear to have been fabricated. It was intended that, of the original contract 500 De Lisle carbines, nos. 451-500 would be the Airborne folding stock models.

This stock was designed by George Patchett; a pistol grip is fixed to the receiver with the folding metal butt hinged through the receiver's butt socket. A spring clip is fitted onto each side of the pistol grip to secure the butt in the extended position. A slot machined into the wooden fore-end accommodates the buttplate assembly in the folded-down position.

The Airborne model has sling swivels on the left hand side. The forward swivel mount is riveted onto the silencer casing near the muzzle below the foresight, while the rear swivel is mounted just forward of the safety catch. The action, silencer, sights and basic fore-end are the same as on the standard model. With a folded length of 25.7-in., it is a practical variation; its 35.3-in. extended length is about .2-in. shorter than the fixed butt type.

Sights on the De Lisle carbines may be re-graduated Lanchester Mk I sights (50, 100, 150 & 200 yard) or simplified flip-over types per the Mk I* Lanchester. Modified Lanchester sights were supplied by H. Webb & Co. of Brantwood Rd., London N17, their wartime maker's code was S293. Early Ford De Lisle models feature a Winchester style ramp and one example is even recorded with a Mk III SMLE sight fitted, a likely service armourer's replacement.

Holland & Holland modified some of the Lanchester Mk I sights for night use. They drilled the rear of the foresight post and slotted the rearsight so as to insert luminous material for night applications and bronofix blackening applied to adjacent surfaces for contrast.

Some De Lisle Carbines underwent FTR programs at Enfield in 1948 and were engraved on the bolt handles, 'FTR-48'. This figure is recorded as being some eight carbines.

In 1946, W.G. De Lisle transferred from the Ministry of Aircraft Production to the Ministry of Works, although he had had no further involvement with the silenced carbine project after assembly of the prototype batch at Ford Dagenham. The question of royalty payment was investigated and he was awarded three shillings each for the projected figure of five hundred carbines. From this total of £75, he was taxed £37/10/-. De Lisle's said his only real gain was his satisfaction in contributing to the war effort, in addition to his MAP service.

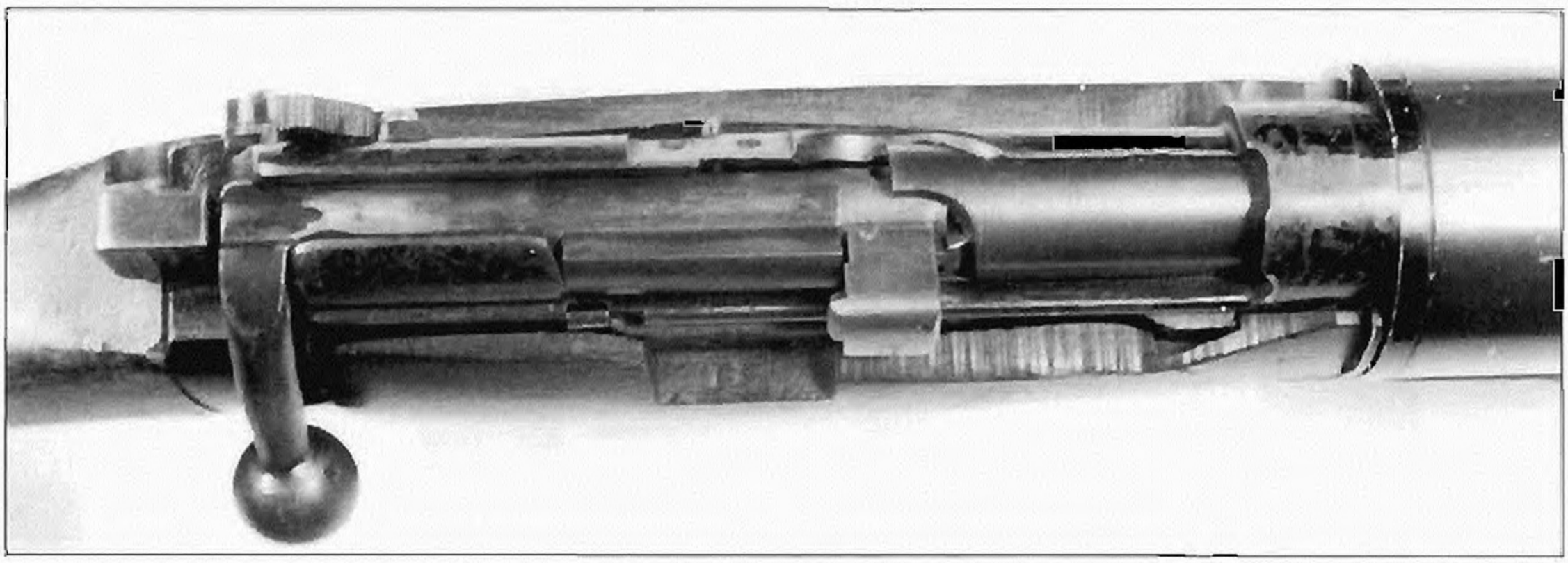

Different views of the Sterling Engineering De Lisle Commando Carbine. Note the serial number in the charger guide slot, new ejector and the WW2 vintage No. 1 beech fore-end. M.O.D. Pattern Room, Nottingham

A trio of Sterling Engineering De Lisle Carbines. Standard production model, instructional sectionised variant, and the Airborne prototype model with folding stock extended. School of Infantry Museum, Warminster

SPECIFICATIONS

CARBINE, .45 COMMANDO, DE LISLE

Lengths:	
Carbine, overall	2 ft. 11.75 in. [908mm] *normal butt*
Barrel	7.25 in. [184mm]
Butt (from action body) ...	13.5 in. [342mm]
Weights:	
Carbine	8 lb. 4 oz. [3.7 kg] *with empty magazine*
Carbine *with cleaning gear*	8 lb. 6 oz. [3.8 kg] *stored in butt trap*
Weight of pull-off	First pull 2 to 3 lbs. Second pull 5 to 6 lbs.
Barrel:	
Calibre	.45-inch
Rifling	6 groove, concentric
Rifling twist	L.H.
Muzzle Velocity	830 ft./sec. *approximate*
Sights:	
Foresight	Blade, not adjustable.
Backsight	Tangent leaf on riveted bed Graduated 50, 100, 150 & 200 yds.
Effective range	275 yds.
Magazine	7-round in-line, modified M'1911 ACP 11-round in-line, optional
Service Accessories	Webbing Sling Oil Bottle Jag, brass bristle brush, steel rod (Thompson)

CARBINE, .45 AIRBORNE COMMANDO, DE LISLE

Lengths:	
Carbine, butt folded ...	1 ft. 1 in. [330mm]
Carbine, butt extended ...	2 ft. 11.3 in. [896mm]
Barrel	7.25 in. [184mm]
Weights:	
Carbine	7 lb. 2.5 oz. [3.3 kg] *with empty magazine*
Magazine	7-round in-line, optional 11 round in-line

[This Drawing is a reproduction of the Original on a reduced scale.]

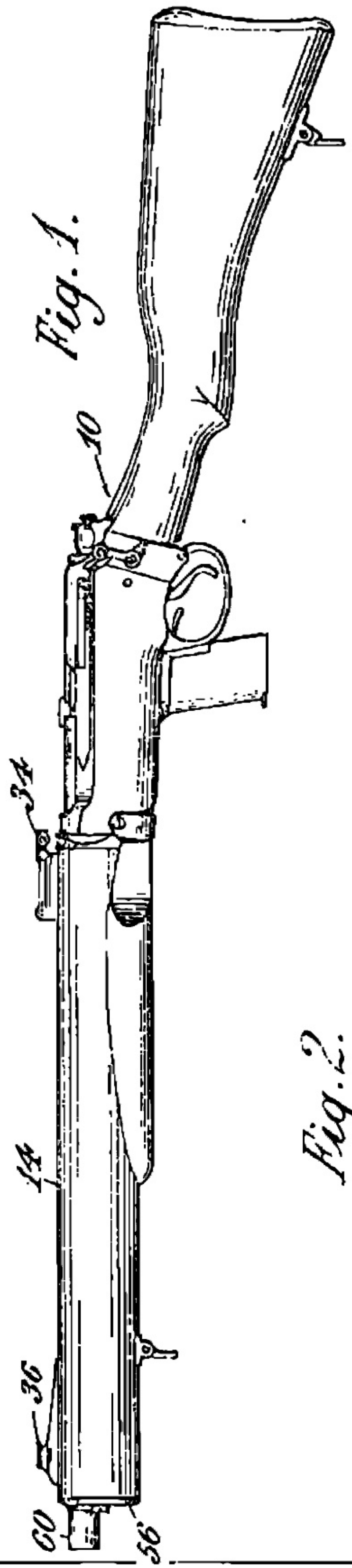

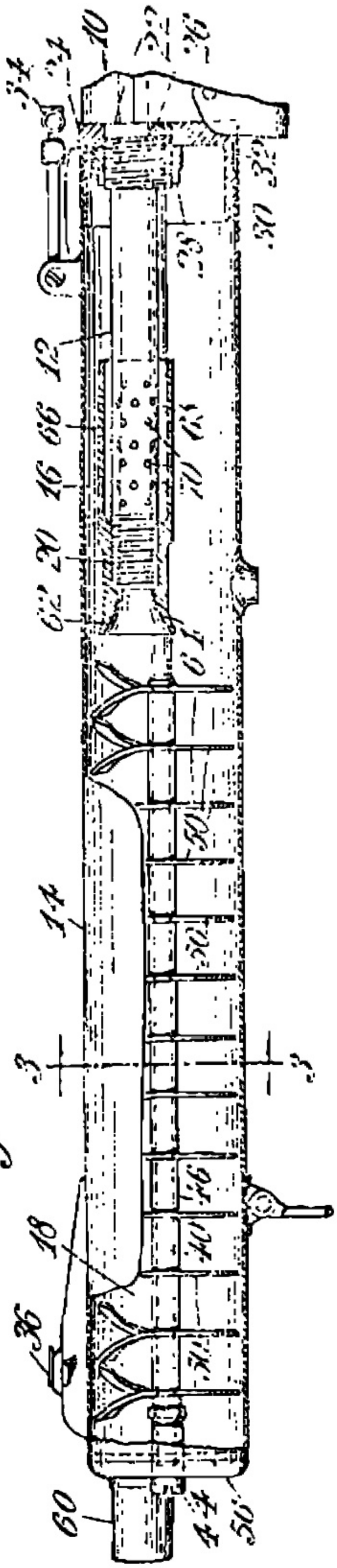

PATENT DRAWINGS

Minor differences in the carbine configuration will be noted with more similarities to the Ford Dagenham prototypes rather than the Sterling Engineering production. Obvious examples of these differences are the muzzle extension forward of the front cap, shorter length of tubular magazine housing and in the form of foresight assembly. The leaf backsight, however, is more like the later Sterling model rather than the Ford production. It is considered that these Patent Drawings were done later during the war.

Nevertheless, the Archimides-style spiral for discharging gasses, the combination of front and rear metal baffles, the certain baffle bleed holes and end cap powder residue bleed, the internal barrel nozzle and radial-drilled bleed holes on the barrel itself, remain consistent and are the basis of De Lisle's design. The De Lisle carbine was intended to be 'self-cleaning' and much less likely to coke or foul up from firing.

FIGURES

Fig 1: *Side elevation showing De Lisle's Commando Carbine.*
Fig 2: *Vertical longitudinal section showing silencer on scale larger than that of Fig. 1.*
Fig 3: *Detailed sectional elevation on the line 3—3 in Figure 3, showing a baffle-plate.*
Fig 4: *Detail plan view showing several baffle-plates and rods, broken away, mounted.*
Fig 5: *An end elevation of the silencer as viewed from the left-hand end of Figure 2.*
Fig 6: *Diagram of German nozzle.*
Fig 7: *Vertical longitudinal section showing another construction of silencer*
Fig 8: *Enlarged vertical section taken on the line 8—8 in Figure 7.*

VOCABULARY LIST

Ref No.	Item	Quantity
10.	Carbine, left side view	1 assembly
12.	Barrel, .45 calibre, converted from Thompson SMG replacement spare	1
14.	Tubular casing mounted eccentrically; rear end constitutes an expansion chamber	1
16.	Expansion chamber with surrounds the barrel	1
18.	Baffle chamber extending in front of the nozzle	1
20.	Barrel nozzle, threaded	1
22.	Circular mount, socket for rear end of casing	1
24.	Circular mount, socket for rear end of casing	of 22
26.	Front end of action receiver	of 10
28.	Lock nut screwed on the barrel	1
30.	Pin, securing, short	1
32.	Casing slot	of 14
34.	Rear sight	1 assembly
36.	Front sight	1 assembly
40.	Baffle support rod, left, screwed into end wall (22)	1
42.	Baffle support rod, right, screwed into end wall (22)	1

Fig. 3.

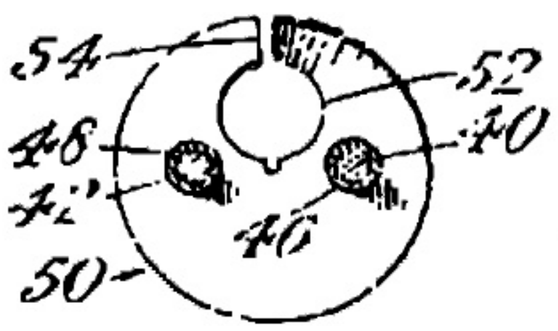

Fig. 4.

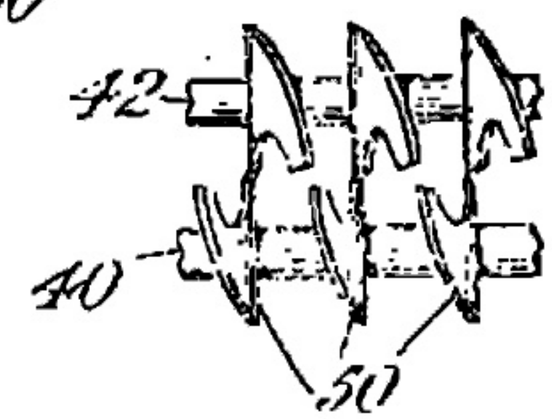

Fig. 5.

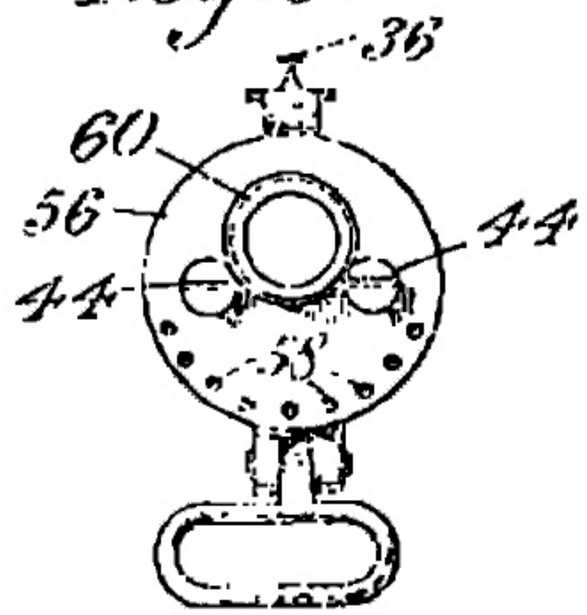

Fig. 6.

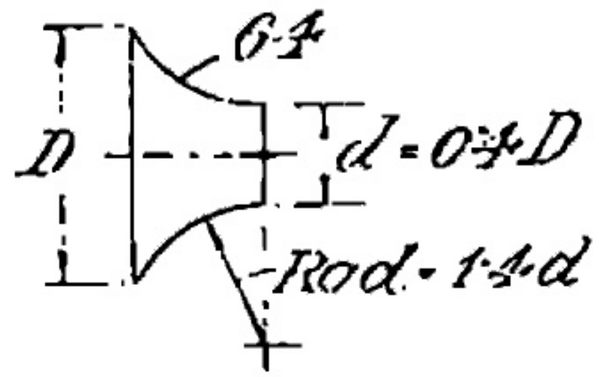

Fig. 8.

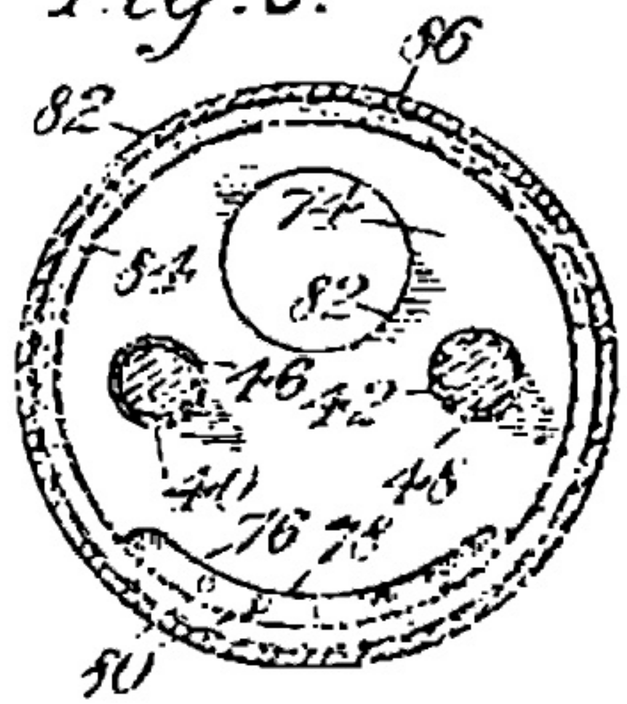

Fig. 7.

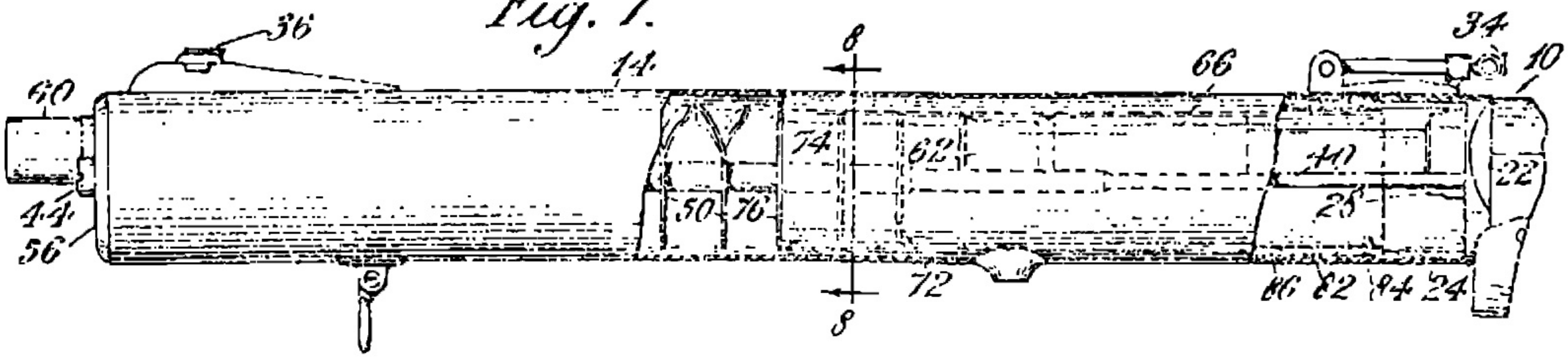

2 SHEETS.
SHEET 2.

44.	End cap screw	2
46. & 48.	Tube, baffle support rod	2
50.	Baffle plate, spiral disc	13
52.	Eccentric perforation in baffle plate for bullet passage	of 50
54.	Radial slit in baffle plate for gas passage, forming spiral	of 50
56.	End plate with bleed holes	1
58.	Powder discharge bleed holes, 8 or 9 of	of 56
60.	Gas discharge tube	1
62.	Expansion nozzle	1
64.	Internal face of nozzle, shaped per fig. 6	of 62
66.	Shield, cylindrical, mild steel	1
68.	Concentric annular space	of 66
70.	Vent holes. Gas discharge	of 66
72. & 74.	Baffle plate, flat, rear, positioned in absorbing liner	2
76.	Baffle plate, flat, rear, large, outside absorbing liner	1
78.	Baffle plate, flat, end	1
80.	Holes, arcuate	part of 78
81.	Perforations in line with eccentric perforations (52)	of 72-78
82.	Sound absorbing liner	1
84.	Metal sheath, inner, brass, to protect sound liner	1
86.	Metal sheath, outer, brass, to protect sound liner	1

Note: The sound baffle spacers (24 of) are not described in the Patent Specifications, nor are the spring washers for the front and rear nuts on the baffle support rods.

The shortened bolt requires a new (or modified) bolt body, bolthead, extractor and firing pin as illustrated on the pages in this section.

STERLING ENGINEERING CO. LTD. DAGENHAM ENG. CSS.5469.

No.	PIECE	DESCRIPTION

TITLE - BOLT HEAD.

MAT'L -

FINISH

SCALE FULL SIZE. DRAWN CH'K'D APP'D

USED ON

PART No	DESCRIPTION
CSS.5465.	BOLT ASSY.

10-10-44

ISSUE.2. D.O.I.1584. 1-3-45. ·125" MIN. DIM. ADDED

STANDARD ·303" LEE-ENFIELD MARK III * RIFLE PIECE PART.
MODIFIED TO DIMENSIONS MARKED *

DISTRIBUTION

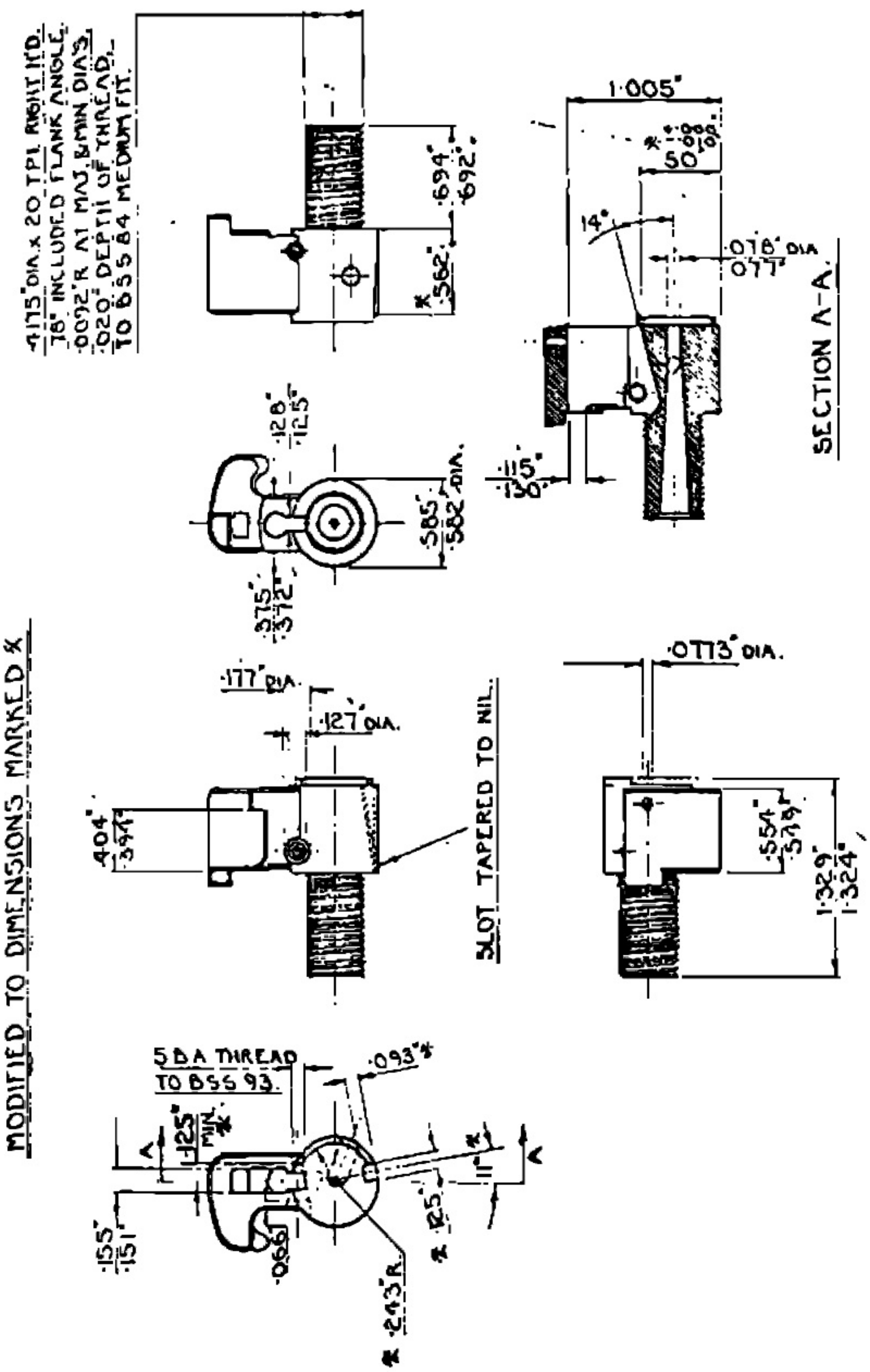

LIMITS ON CONVERSION (*) DIMENSIONS ±·005" UNLESS STATED.

CSS.5469.

STERLING ENGINEERING CO. LTD. DAGENHAM, ESSEX.

PART No. CSS 5407

No.	PIECE	DESCRIPTION

TITLE:- STRIKER

MAT'L:- STANDARD LIGHT-ENTILLO STRIKER'S

FINISH:- CLEAN.

SCALE:- FULL SIZE & 2:1 | T.U.

DRAWN: | CHK'D: | APP'D:

USED ON

PART No.	DESCRIPTION
CSS 5406	BOLT ASSY.

ISSUE 1
23-8-44

ISSUE 2. D.O. 1506. 10-3-45. OVERALL DIM WAS 4·960". 1·295" WAS 1·312". STANDARD TOLERANCE NOTE ADDED.

LIMITS:- FRACTIONAL DIMS. ± 1/64" DECIMAL DIMS. ± ·010" CENTRE DIMS. ± ·005" UNLESS OTHERWISE STATED.

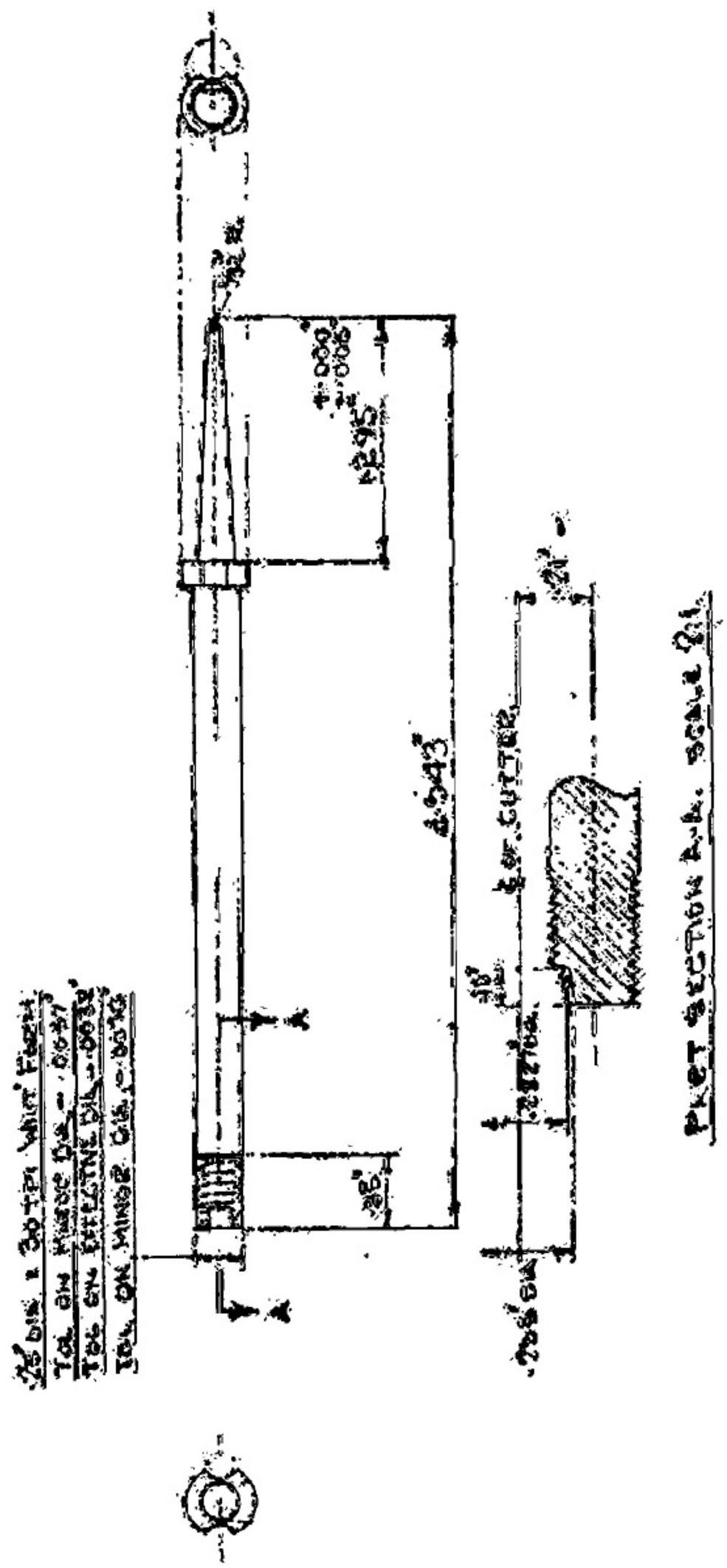

DISTRIBUTION

CSS 5407.

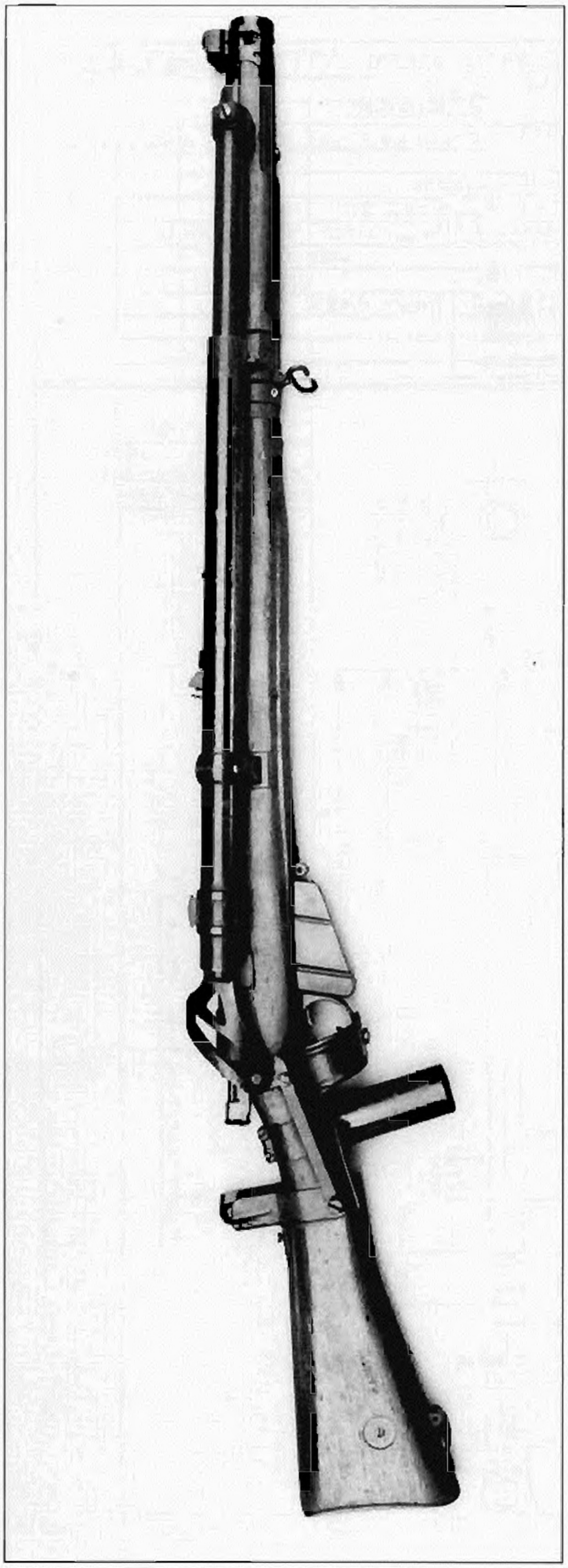

Howell Automatic Rifle, a Great War design resurrected during WW2. The illustrated example is coverted 1918 B.S.A..
M.O.D. Pattern Room, Nottingham

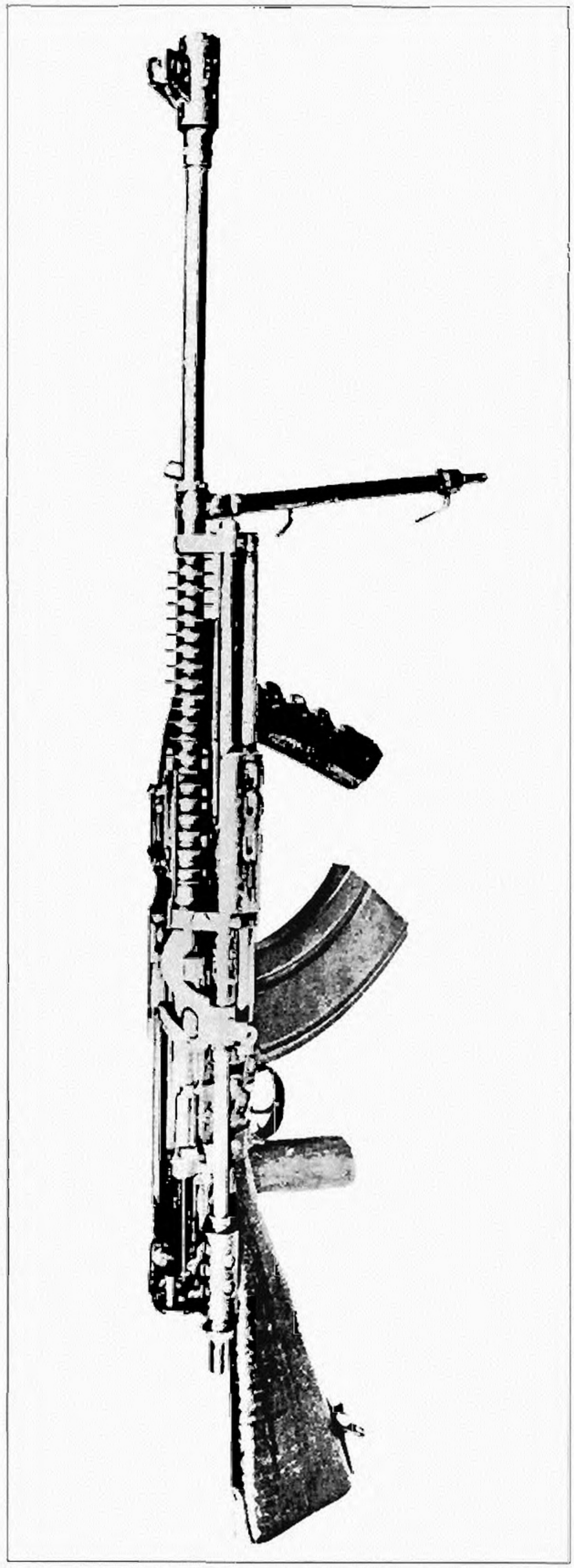

Charlton Automatic Rifle, New Zealand design during WW2, this LMG-style conversion was done in N.Z.
Imperial War Museum, London

AUTO-LOADING LEE-ENFIELD CONVERSIONS

LEE-ENFIIELD RIFLE CONVERSION GENEALOGY

Philip Charlton, N. Howell, Henry Rieder, William Ekins, Ion Idriess and Howard-Francis—names associated with gas operated conversions of the Lee-Enfield. The first patent, however, was taken out in 1918 by Sir A.T. Dawson and Sir G.T. Buckham.

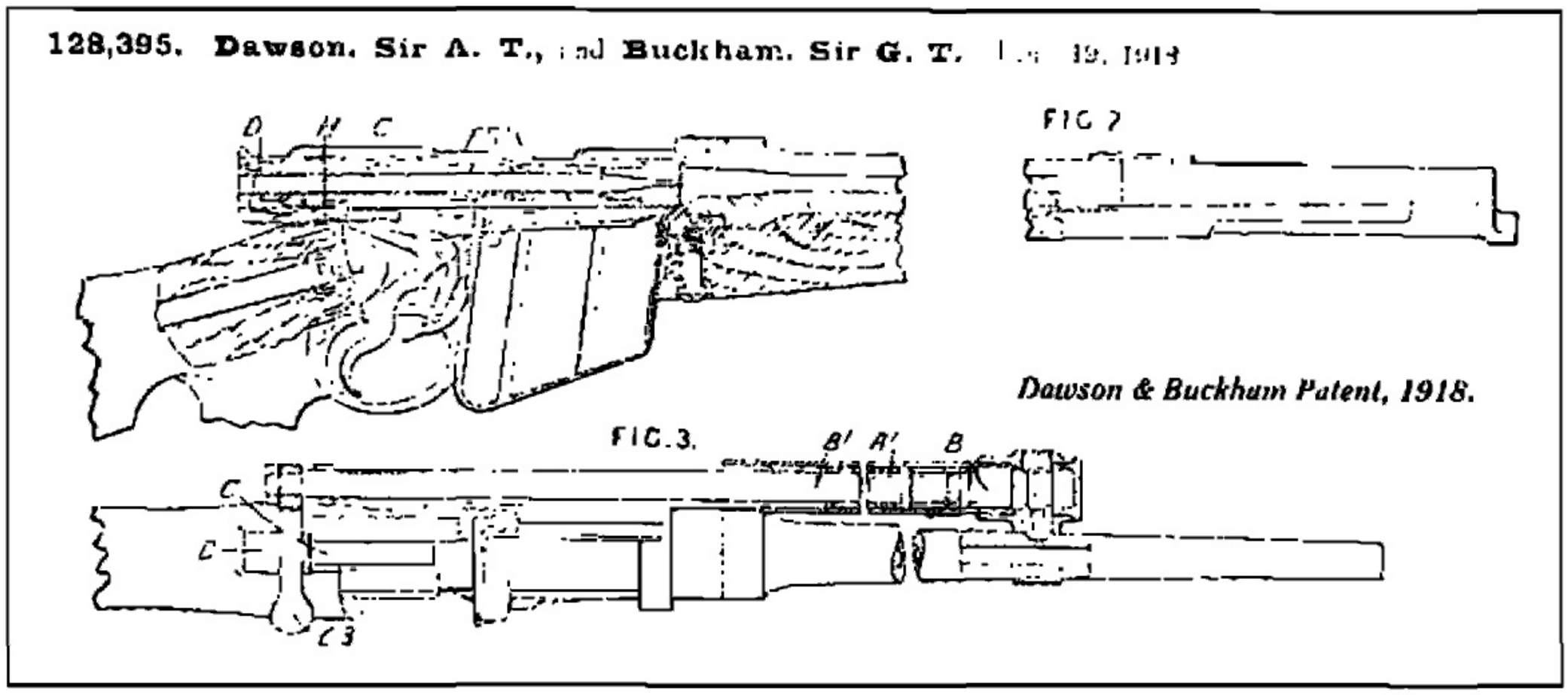

The various auto-loading Lee-Enfield rifles were essentially wartime expediencies. The most commonly known and certainly the model converted in greatest numbers was New Zealand's Charlton but the origins of automatic and self-loading Lee-Enfields goes back as far as the Great War.

Conversions emanated from all major countries where the Lee-Enfield was in service—England, Australia, New Zealand and South Africa. Canada, the other great Dominion seems to have had its automatic ingenuity applied towards the endemic Ross. Any collector fortunate enough to have owned, fired or examined any of these conversions is likely to be quite surprised about the practicality and functionality of these conversions.

The first official reference to a self-loading Lee-Enfield appears to have been Sir A.T. Dawson and Sir G.T. Buckingham who took out a patent on their design, No. 128,395 of 1918. No practical examples or surviving rifles of the Dawson and Buckingham design have been noted although there is a possibility this was designed by an Australian Light Horse trooper, Ion L. Idriess. Excerpts from the Idriess diary are included in 'Australian Automatic Lee-Enfields', an article in 'Collector' magazine, issue no. 1.

Armourer-sergeant King of the New Zealand contingent in the Middle East assisted Idriess in the development of his prototype at the N.Z. Ordnance Workshops at Khan Yunus. Idriess made mention of an English Major 'Sir' who directed him towards 'rifle experts' to advise on production of a working sample. The prototype Idriess auto-S.M.L.E. rifle was then forwarded to England in mid-1917 to the 'National Machine Gun Factory' and no more was heard about it. Another twist to the tale is that an Armourer-sergeant King assisted Philip Charlton in the N.Z. auto rifle conversions— was it the same King involved with Idriess in Egypt in 1917?

The Howell auto conversion, another British design, appears to date from this period as well. It was again put up to the Ordnance Board early in World War 2 as a means to combat

Rieder Automatic Rifle, a South African contender which was submitted to the British Board of Ordnance in 1941.
The Castle Military Museum, Capetown

Charlton type conversion by Australia's Electrolux Co. during WW2, a likely contract for N.Z. using more current S.M.L.E. rifles.
Infantry Centre Museum, Singleton

German aircraft which were raiding England during the early years of the war and there was a short supply of machine guns for A.-A. Defence.

The Charlton was designed by New Zealander Philip Charlton as a stop-gap light machine gun and more than 1,500 such guns were converted from ageing 'Long Tom' Lee-Metford and Lee-Enfield rifles, assembled locally during World War 2. Australia produced a variant during the same period at the Electrolux factory although this was not in an LMG configuration as it was converted from an S.M.L.E. A member of a renowned Adelaide gunsmith family, William Ekins, also produced some prototypes during his army service in WW2.

South African Henry J.R. Rieder converted some 18 rifles to his own design in Capetown during World War 2 and three samples were forwarded to the Ordnance Board in England in June of 1941 for evaluation. However, none have been identified as surviving in England. Rieder's conversion was fitted with a 25 or 30-rd. magazine and it had a cyclic rate estimated at more than 250 rounds per minute. A rather slow cyclic fire rate is a characteristic of most Lee-Enfield S.M.L.E. rifle auto conversions. The Castle of Good Hope in Capetown is reported to have an example of the Rieder conversion.

The Howell, Charlton, Rieder and Howard Francis conversions appear rather awkward at first, and their mechanisms rather cumbersome, even impractical. But this is not necessarily so. Having fired a privately owned Howell in Arizona, the smooth, cyclic action was surprising and the rifle was comfortable to hold and use. The common feature of the Charlton, Howell, Rieder and Ekins designs is the outboard full-length gas piston and assembly fitted onto the right side of the rifle. This acts directly on the cut-down handle of the breech bolt via the medium of a camming slot extension to the gas piston.

The Howell, Charlton, Rieder and Ekins rifles were all in .303 calibre. However, wartime England saw another innovative conversion of the Lee-Enfield, the Howard Francis. This was a carbine which fired the 7.63mm Mauser pistol cartridge. During a recent firearms amnesty in Britain, an example of the Howard Francis was discovered and now is part of the Ministry of Defence Pattern Room collection in Nottingham.

Developed in England late in 1943, the Howard Francis system was for the .303 chamber to be plugged and a new chamber for the 7.63mm pistol round, reamed. This carbine is stocked up more like a sporter with new auto pistol magazine projecting below the normal position. This is a simple blowback design using the original .303 barrel and rifling as the 7.63mm bullet stabilised reasonably well with the .303 rifle barrel.

Ordnance Board Proceedings record their notification of the Howard Francis machine carbine, via the Admiralty. Possibly the Admiralty had been approached first as they had more requirement for such a carbine, or maybe the inventor(s) had naval connections.

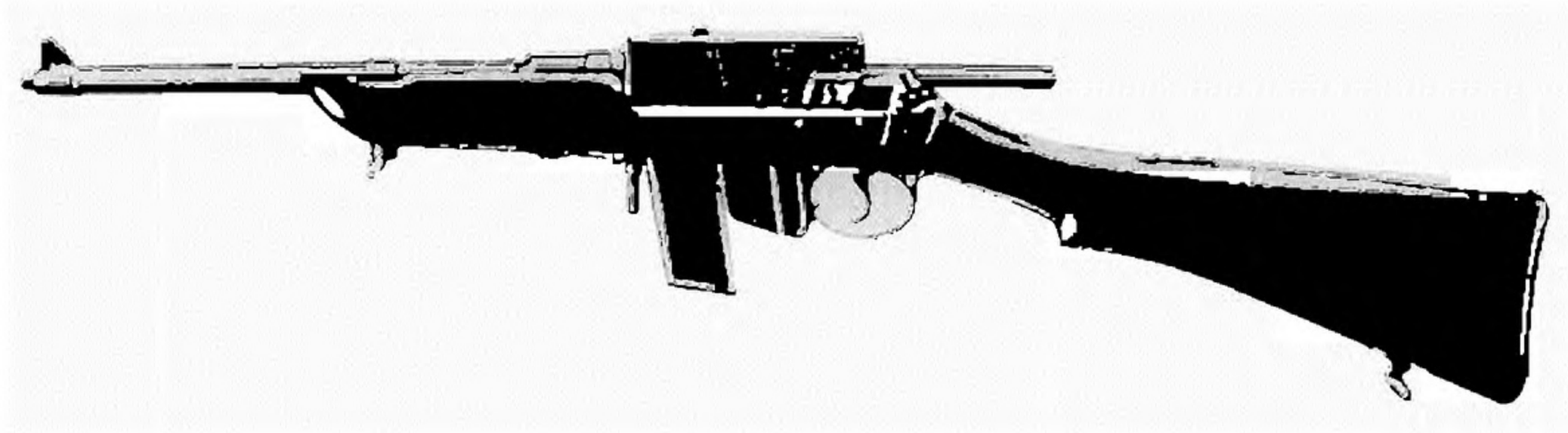

Howard Francis machine carbine
O.B. Procs. 1943

But the Charlton represents the only general production (or rather conversion) auto-loading model of the Lee-Enfield and it might be considered as the most practical due to its relative success. Part of the concept of Charlton's conversion was for sub-contract production of new-made component parts

Cams	Machine Tools Ltd., Wellington
Springs	N.W. Thomas & Co. Ltd., Wellington
Cooling fins	Precision Engineering Co. Ltd., Wellington
Trigger side plates	Precision Engineering Co. Ltd., Wellington
Side plates	Motor Mowers Ltd., Hastings
Cocking pieces	Motor Mowers Ltd., Hastings
Piston rods &	Hastings Boys High School engineering workshop
Gas cylinders	Tourist Motors, Hastings Boys High School engineering workshop
	Southward Engineering
	Levin Machine Tools, N.W. Morris
	Precision Engineering Co. Ltd., Wellington

Original type 30.2 in. long barrels are nominated in documentation for the conversions and these were in short supply, especially with serviceable rifling. Some new condition long barrels were acquired, ex-rifle club target models with no backsight beds as rifle club shooters used removeable aperture backsights. However, the long barrels appear to have been trimmed to the short rifle length of 25-inches making them the same configuration as heavy target barrels used in the No.1 Mk III* HT sniper rifle. The heavier barrel was better suited for automatic fire, a probable reason for shortening the original profile 30.2-inch barrels rather than trying to obtain 25.2-in. short rifle barrels. These would have been even harder to obtain at the time than the older long barrels.

Serviceable bolt heads were also in short supply, so original parts were remachined and heat-treated. The cocking pieces were another problem as this highly-stressed part, some over 50 years old, could not be heat treated for a new lease of life, mainly due to the age and flaws in the old metal. New cocking pieces were unobtainable from Australia due to shortages there, so many of the cocking pieces had to be manufactured from new steel.

The rate of conversion for the Charltons was intended to be as high as 200 per month but by July 1942, only 431 of the conversions had been effected and most of these were the older M.L.M. rifles. Assembly was done in Charlton's Motor Workshop in Hastings, Hawkes Bay and a total of 1,500 guns were eventually completed. Most of the N.Z. Charlton rifles were destroyed in a fire at the Palmerston North Showground services stores complex after the war.

As 19th century Magazine Lee-Metford and Magazine Lee-Enfield rifles were the basis for these conversions, rifles too old to be called up again, even for Home Guard service, most of the problems encountered related to the rebuilding of obsolete ordnance. Many of the rifles had long ago been downgraded to Drill Purpose. For this reason alone, the program must be considered a success.

All of the .303 conversions tap gas from the middle section of the barrel and this is directed onto a piston or operating rod housed along the right side the fore-end. At the rear end of this operating rod or piston is a cam slot which operates to unlock and move the breech bolt. The mode of transfer of this energy and attachment to the bolt body itself or to the bolt handle, is the prime difference between the full-bore conversions.

SPECIFICATIONS

N.Z. CHARLTON SELF-LOADING RIFLE

Lengths:	
Rifle, overall	115.6 cm [45.5 in.] *with normal butt*
Barrel (less compensator) ...	c.63.5 cm [25.0 in.]
Barrel (with compensator) ...	66.0 cm [26.0 in.]
Weights:	
Rifle	7.3 kg. [16 lb 0 oz]
Rifle with full magazine ...	8.2 kg [17 lb. 14 oz.]
Barrel:	
Calibre	.303-inch
Rifling	6 groove, Enfield *or* 7 groove, Metford
Rifling twist	L.H., 1 turn in 10 in
Muzzle Velocity	2,400 ft./sec. *approximate*
Sights:	
Foresight	Blade, adjustable elevation with replacement
Backsight	V-notch, folding leaf to 1,800 yds.
Sighting Radius	53.4 cm [21 in.]
Magazine	10-rd staggered row
	30-rd staggered row, optional

HOWELL, EKINS, RIEDER & ELECTROLUX CHARLTON S.L. RIFLES

Lengths:	
Rifle, overall	134.1 cm [44.5 in.] *with normal butt*
Barrel (w/o flash hider) ...	64.0 cm [25.2 in.]
Weights:	
Rifle	4.22 kg. [9 lb 6 oz] *with empty magazine*
Rifle with full magazine ...	5.24 kg [11 lb. 10 oz.]
Barrel:	
Calibre	.303-inch
Rifling	6 groove, Enfield concentric
Rifling twist	L.H., 1 turn in 10 in.
Muzzle Velocity	2,400 ft./sec. *approximate*
Sights:	
Foresight	Blade, adjustable elevation with replacement
Backsight	U-notch, tangent leaf to 2,000 yds.
Sighting Radius	48.2 cm [19 in.], c. 30 in. + on Electrolux
Magazine	10-rd staggered row
	20, 25, 30 rd staggered row options on some

CARBINE, HOWARD FRANCIS, 7.63^{mm}

Lengths:	
Rifle, overall	812 cm [32.0 in.]
Barrel	32.8 cm [12.75 in.]
Weights:	
Rifle	3.8 kg [8 lb. 1.5 oz.]
Sights:	
Foresight	Blade
Backsight	'V', on breech block
Magazine	12-rd

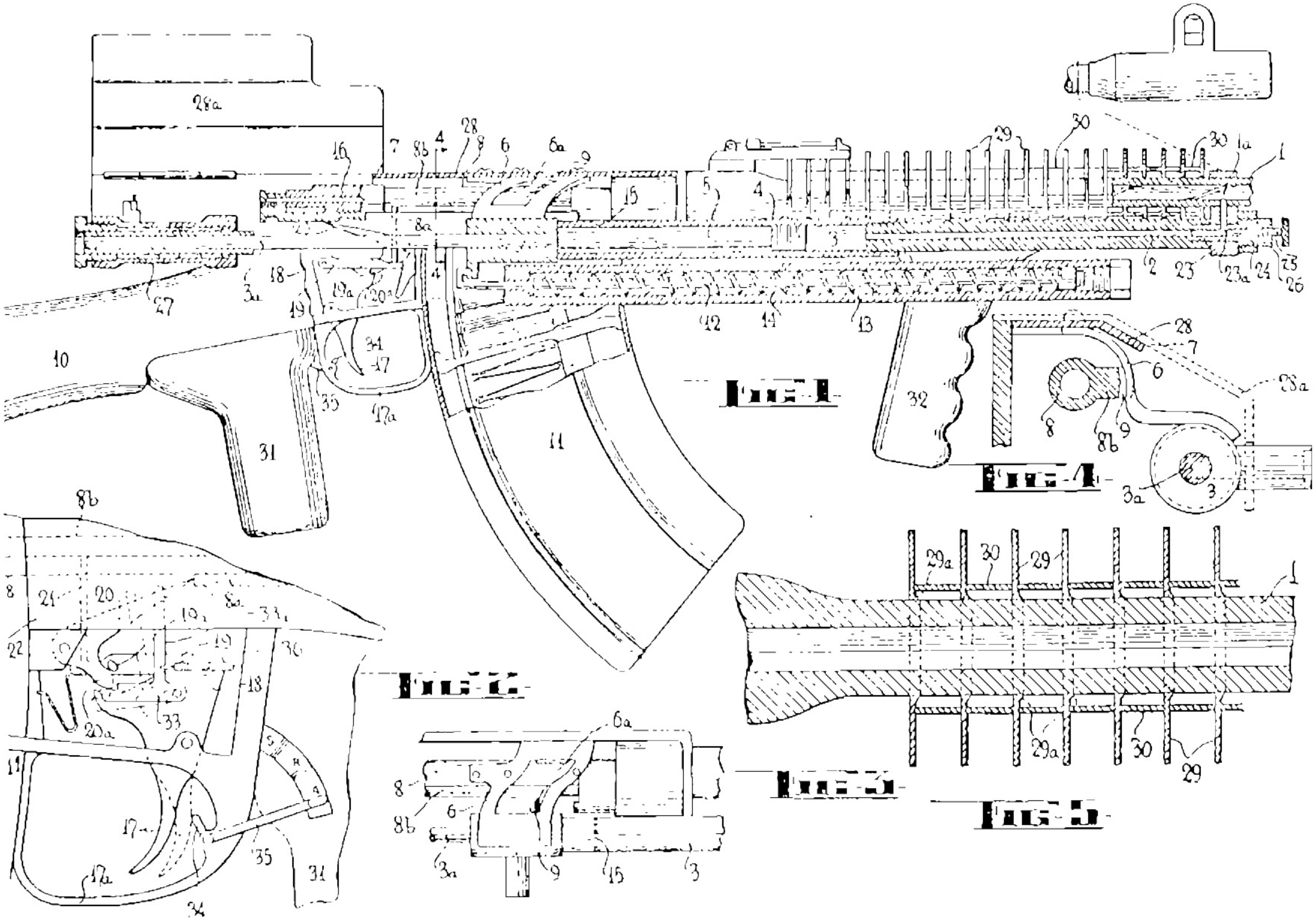

Charlton Conversion Patent Drawings

N.Z. CHARLTON SELF-LOADING RIFLE

Philip Charlton took out patents in November 1941; New Zealand was desperately short of light machine guns and it underwent Army tests on 7th November 1941. The Charlton outwardly resembles a typical light machine gun with exposed barrel, cooling fins and bipod just forward of the gas take-off. It was intended for use from the hip, shoulder and bipod as a semi-automatic arm with full-auto capability in reserve.

The Charlton has two tubes along the right side of the gun, the upper one for gas and to house the operating piston, the lower for the return spring and guide rod. A buffer assembly is mounted onto the rear of these tubes. The fire selector switch is on the left side above the trigger with settings for safe, repetition and automatic. Because of the additional fittings, the weight of the Charlton is considerabe. It has an adjustable bipod and forward vertical hand grip, as well as a rear pistol grip near the trigger.

Conversions were turn-of-the-century Lee-Metford and Lee-Enfield rifles. By the end of the war, 1,500 had been converted. SMLE 10-rd magazines or a 30-rd modified Bren magazine were available. The guns were assembled in Charlton's Motor Workshop in Hastings, Hawkes Bay.

Local machine shops were contracted to supply parts required in the conversion and some original components such as boltheads and cocking pieces required heat treatment or the manufacture of new spares due to the age and state of the old metal.

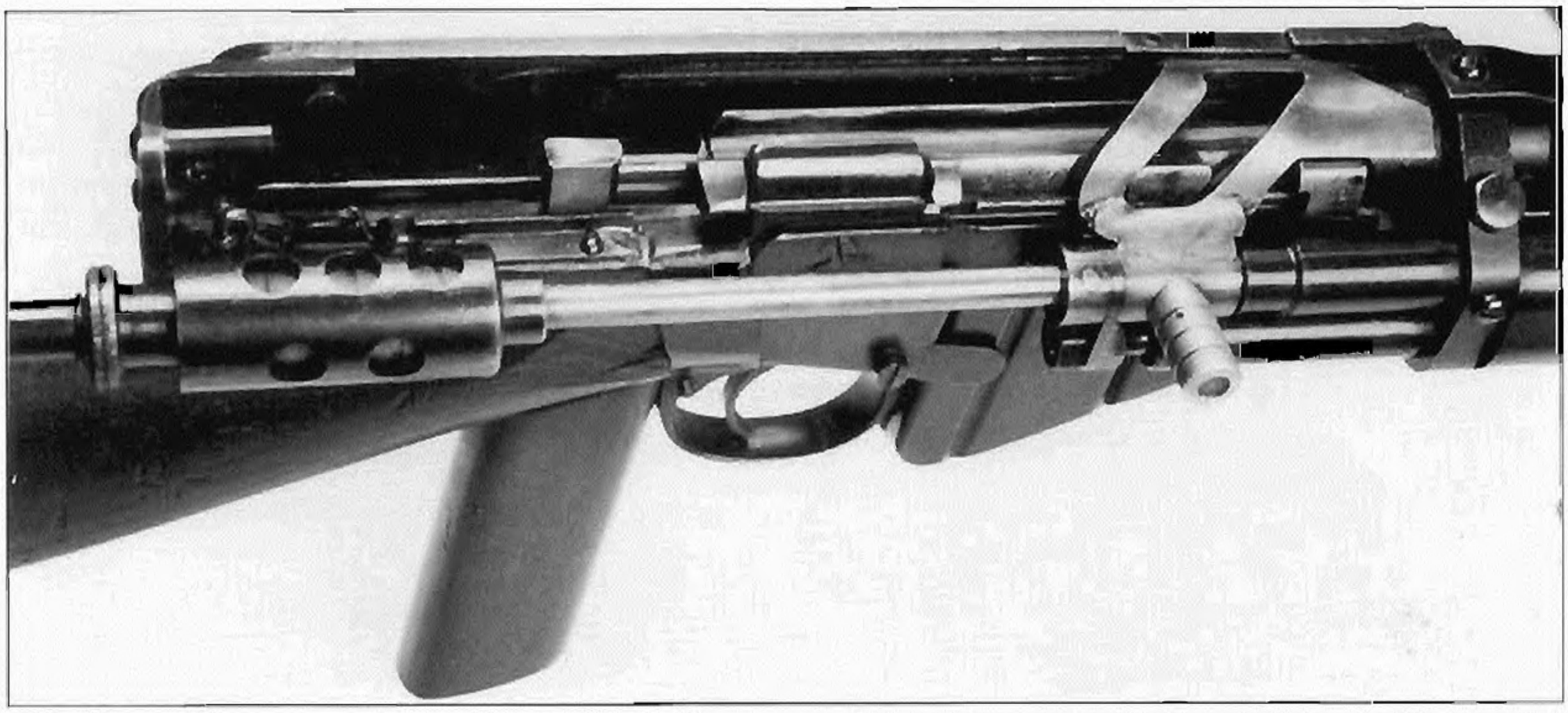

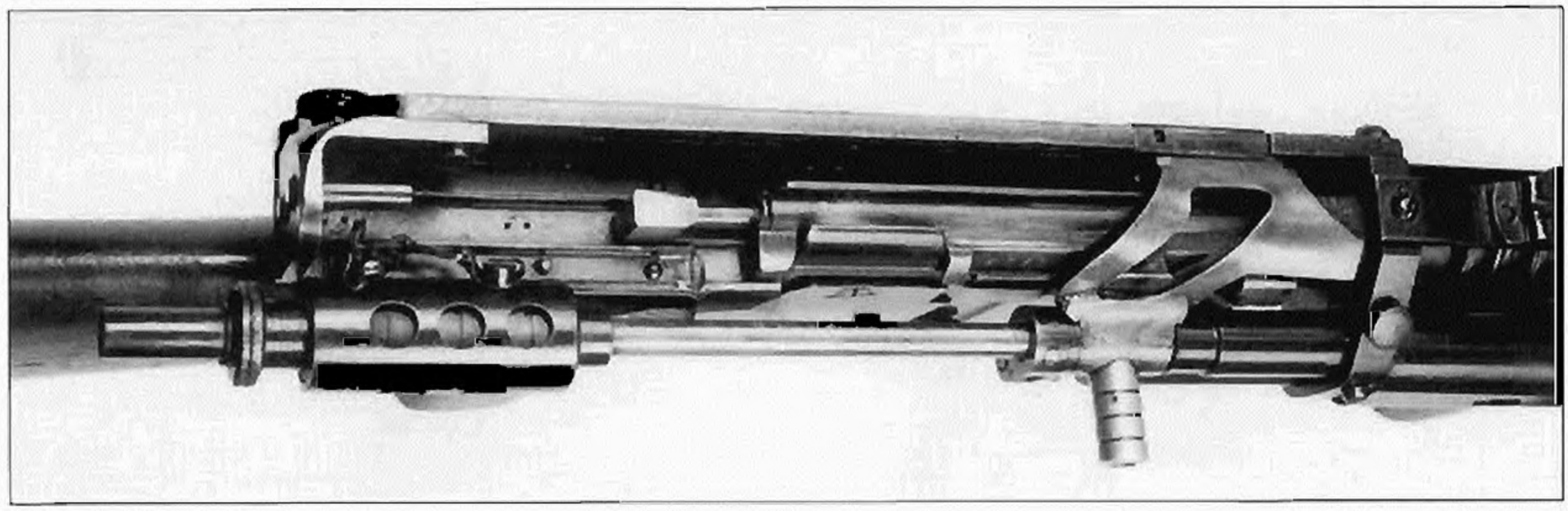

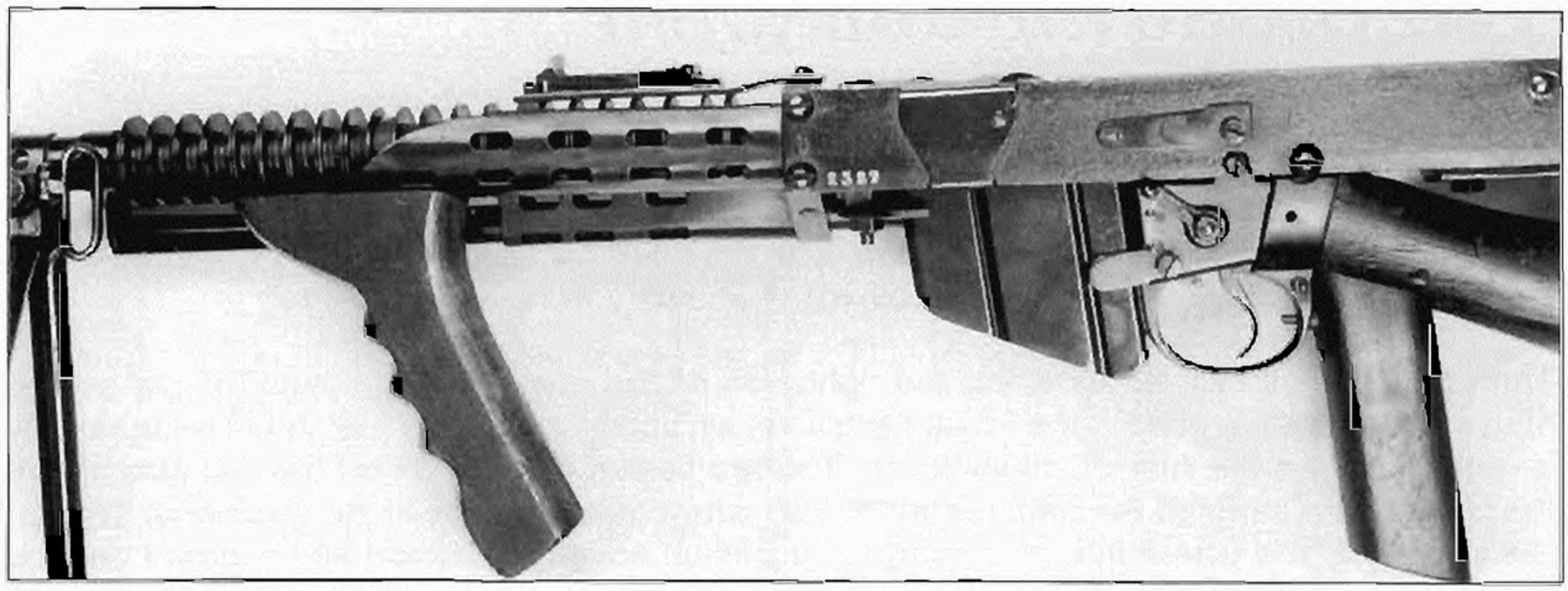

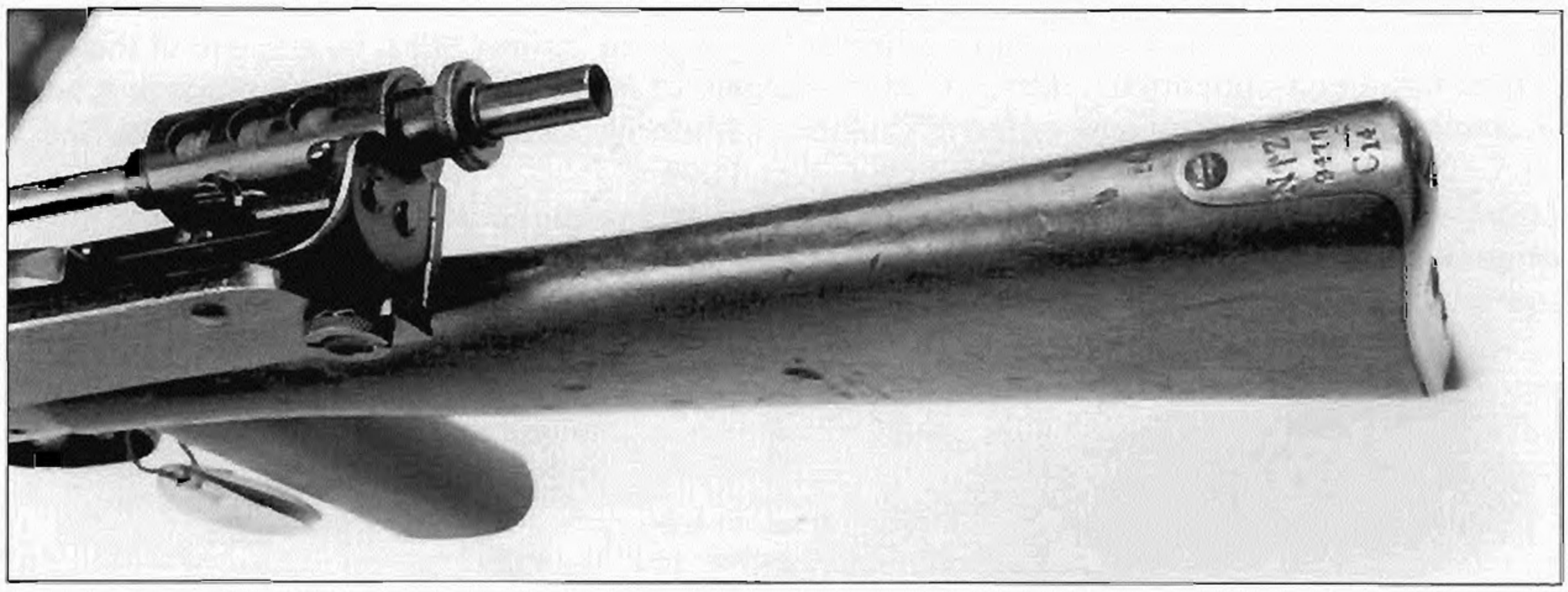

Left and upper left views of the N.Z. Charlton. Large capacity magazine was optional but not available until end of production. Note the N.Z. issue markings of the original Magazine Lee-Enfield rifle on the brass butt tang, with unit and rack numbers stamped below the New Zealand service ownership mark.
M.O.D. Pattern Room, Nottingham & Imperial War Museum, London

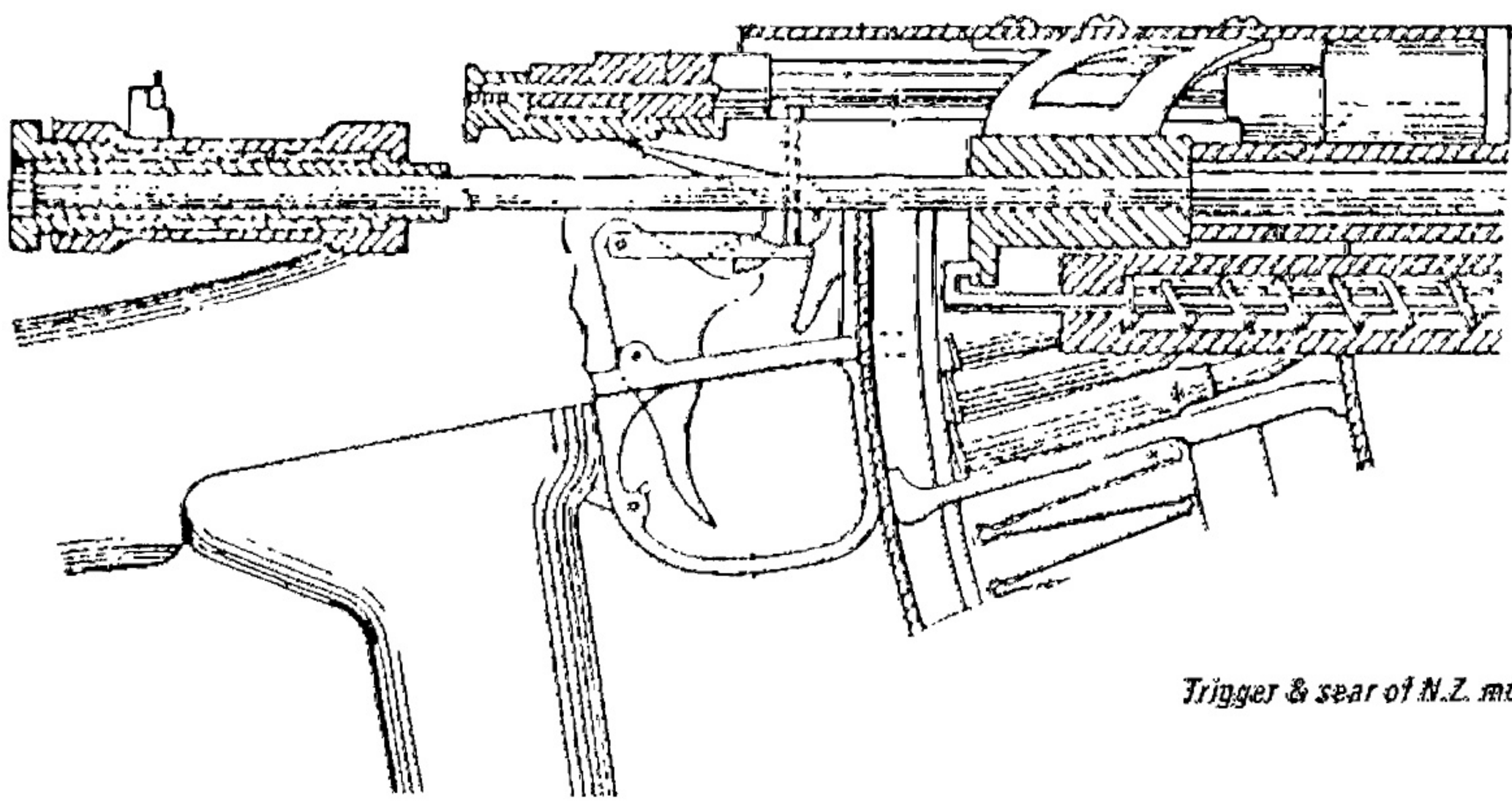

Trigger & sear of N.Z. model

ELECTROLUX (Aust.) CHARLTON SELF-LOADING RIFLE

An Australian variation of Charlton's design was made by Electrolux Pty. Ltd., of Alexandra Ave., South Yarra in Melbourne, Victoria. A No. 1 Mk III* S.M.L.E. rifle was utilised for this particular conversion. Original furniture was retained as was the magazine, sights and nosecap. Sheet metal guards cover the mechanism on the right side of the rifle so that, from the right side at least, it bears little resemblance to the original New Zealand model.

On the left side of the Electrolux model, a somewhat similar type of selector switch is mounted. The rear pistol grip also is reminiscent of the New Zealand version. The sight arrangement is quite different, a simple aperture at the rear, precluding range adjustment. The project was discontinued by June 1944. This example is stamped 'N Z CHARLTON AUTOMATIC' on the left side of the conversion receiver sideplate.

Two machined plates are attached to the original receiver at the front, around the receiver ring and along the left side of the action body. Onto these flat plates are mounted the fire selector switch and much of the new self-loading mechanism. A cocking knob is attached to the forward portion of the bolt and it has a knurled alloy knob to provide a better grip for cocking. A soldered sheet metal dusctover encloses the gas piston assembly and return spring. The original charger guide has been removed.

The three-positions on the fire-selector switch on the left side are 'F', 'L' and 'S' instead of the more usual 'R', 'S' and 'A' for repetition, safe and automatic. A simple aperture sight is mounted near the back of the receiver, with three different range holes, although no range distances are nominated.

It appears that few of these Australian Electrolux Charlton prototypes were assembled and the only examples known on public display are at the Singleton Infantry Centre Museum in New South Wales and the Ministry of Defence Pattern Room, Nottingham.

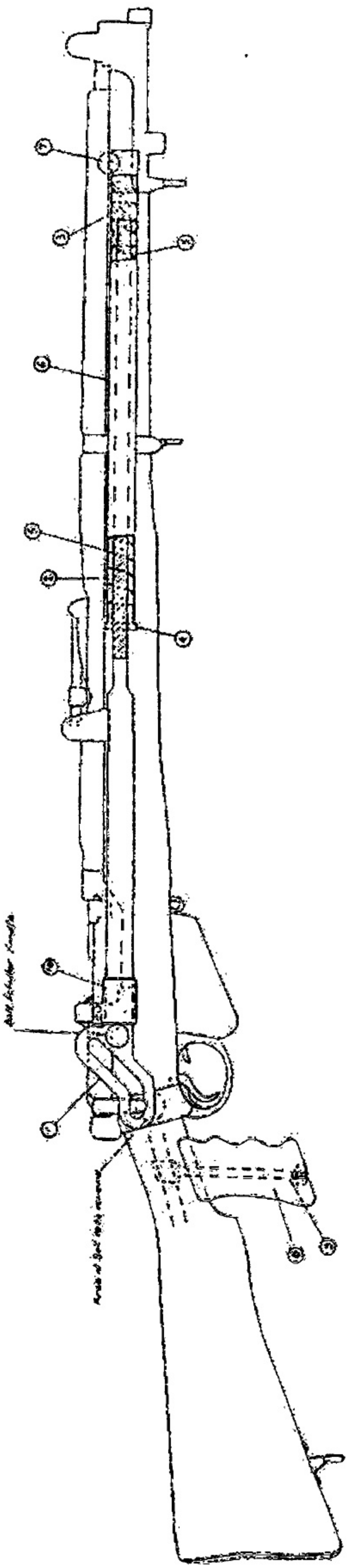

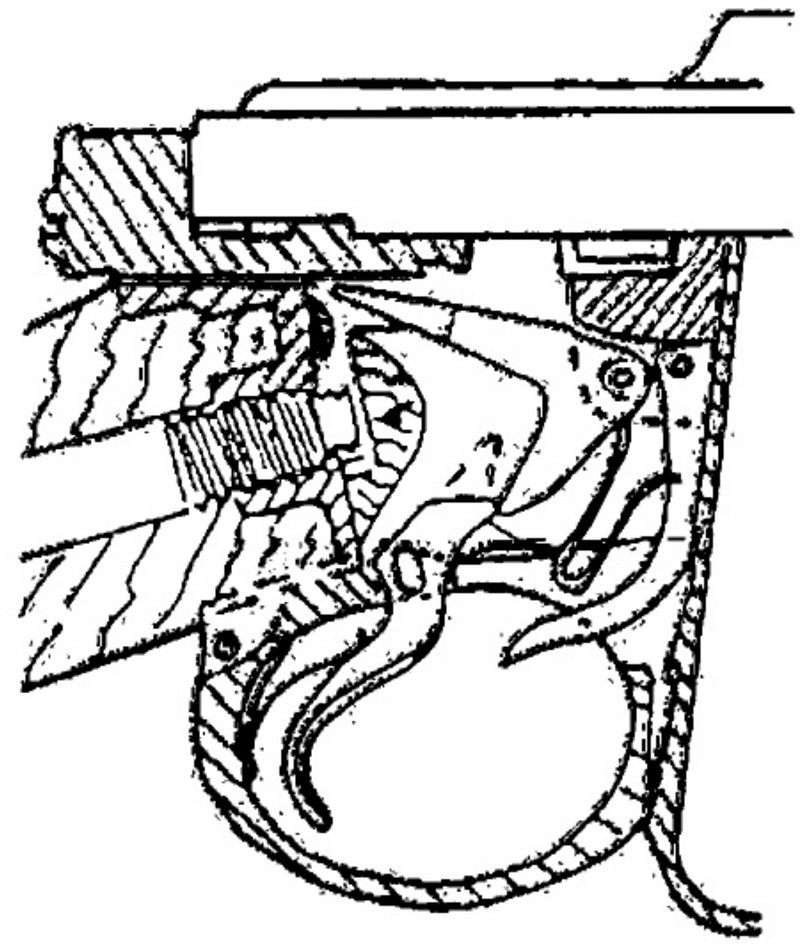

Ekins modified trigger (at top) with the service rifle sears illustrated below for comparison. The double pull trigger principle has been dispensed with for the auto rifle. On the Ekins drawing, the action is not cocked whereas the service trigger below is in the cocked position.

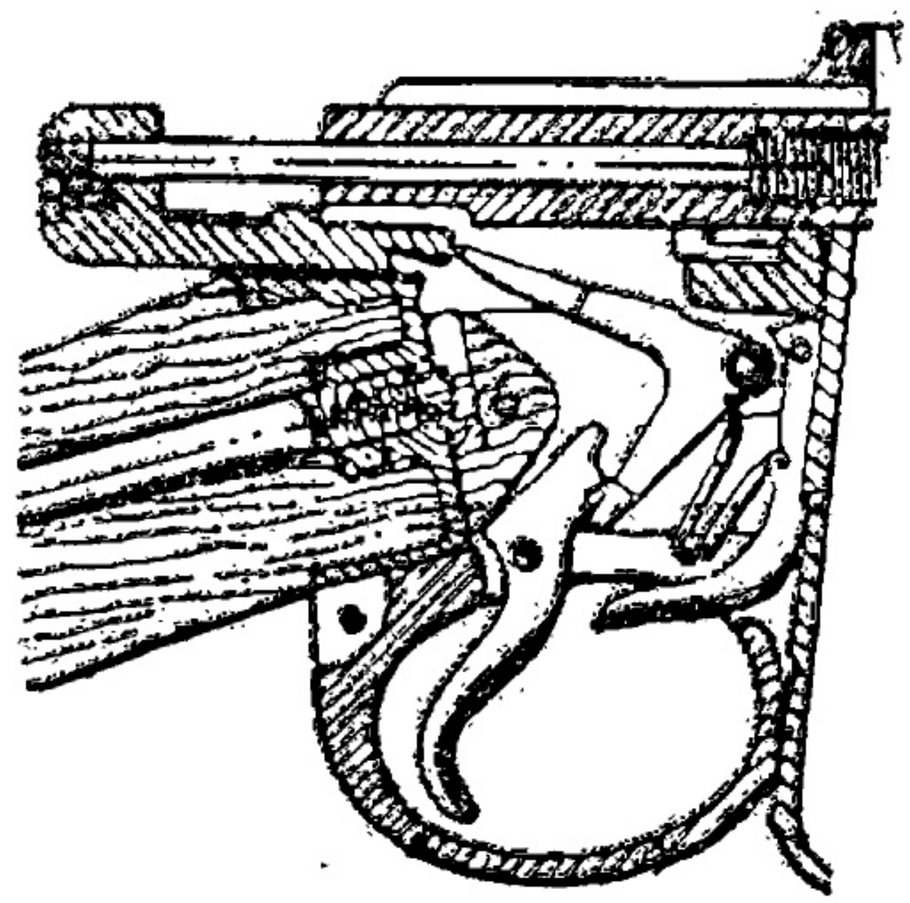

Sgt. William Ekins design drawings, 24th March 1944

HOWELL, RIEDER & EKINS SELF-LOADING RIFLES

The Australian Ekins is similar in principle to the Howell and Rieder with some refinements. On these full-bore conversions, the operating piston housing lies along the right side of the rifle with the gas bleed-off port on the forward section of the barrel. The rear end of the piston connects to a cammed slot which operates the modified bolt handle. These 1944 drawings are titled 'Attachment for SMLE Rifle for Automatic Firing', Ekins was from a well-known Adelaide gunsmith family.

The Ekins SMLE drawing dated 24th March 1944 appended notes are—

1. *Bolt handle knob removed, modified to use a roller in cam slot of attachment. New bolt actuator handle fitted.*
2. *Connecting link attached to piston (3).*
3. *Piston driven against return spring (5) within cylinder (6).*
4. *Threaded plug in end of cylinder.*
5. *Double helix return spring.*
6. *Cylinder fabricated from motor-cycle .. (?). Muzzle end secured to rifle using an inner barrel band.*
7. *Gas take-off port in barrel 3.5-in. from muzzle (N° 60 drill dia.). [Some difficulties locating gas port; first test rifle had this port too close to the breech, result— case separations and destruction of the bolt.]*
8. *Pistol grip (Owen gun?) attached to butt by bolt (9) screwed into collar (welded/brazed?) on stock bolt.*
9. *Pistol grip bolt.*
10. *Bearing bracket attaching mechanism to action frame at charger bridge.*

Notes for the cut-away drawing of Ekins' trigger modifications:

(a) Lower limb of sear ground to modified and shortened shape.
(b) Upper limb of trigger ground to the modified and shortened shape.
(c) Elongated screw hole fitted to trigger.
(d) V-springs fitted behind trigger and under trigger nose where modified upper limb engages modified sear. (SMLE extractor springs?)

Total weight of Ekins attachment was about 15 ozs., conversion could be made by proficient armourers using parts from a standard armourers' kit. Ekins was working on a 30-round magazine for the rifle but was transferred from Alice Springs and did not complete it.

The autoloading rifle conversion operated effectively and hundreds of rounds were fired with no significant difficulties or stoppages. Ekins' conversion underwent extensive testing by the Army at Alice Springs and details were sent to Melbourne. While the drawings and records of Ekins' conversion have been preserved, no examples are known to exist.

Rieder's conversion
Castle Military Museum

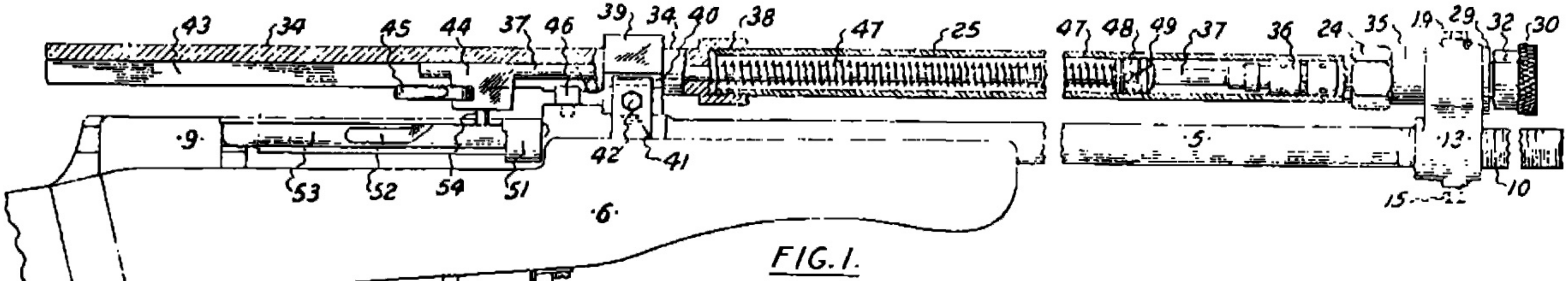

FIG. 1.

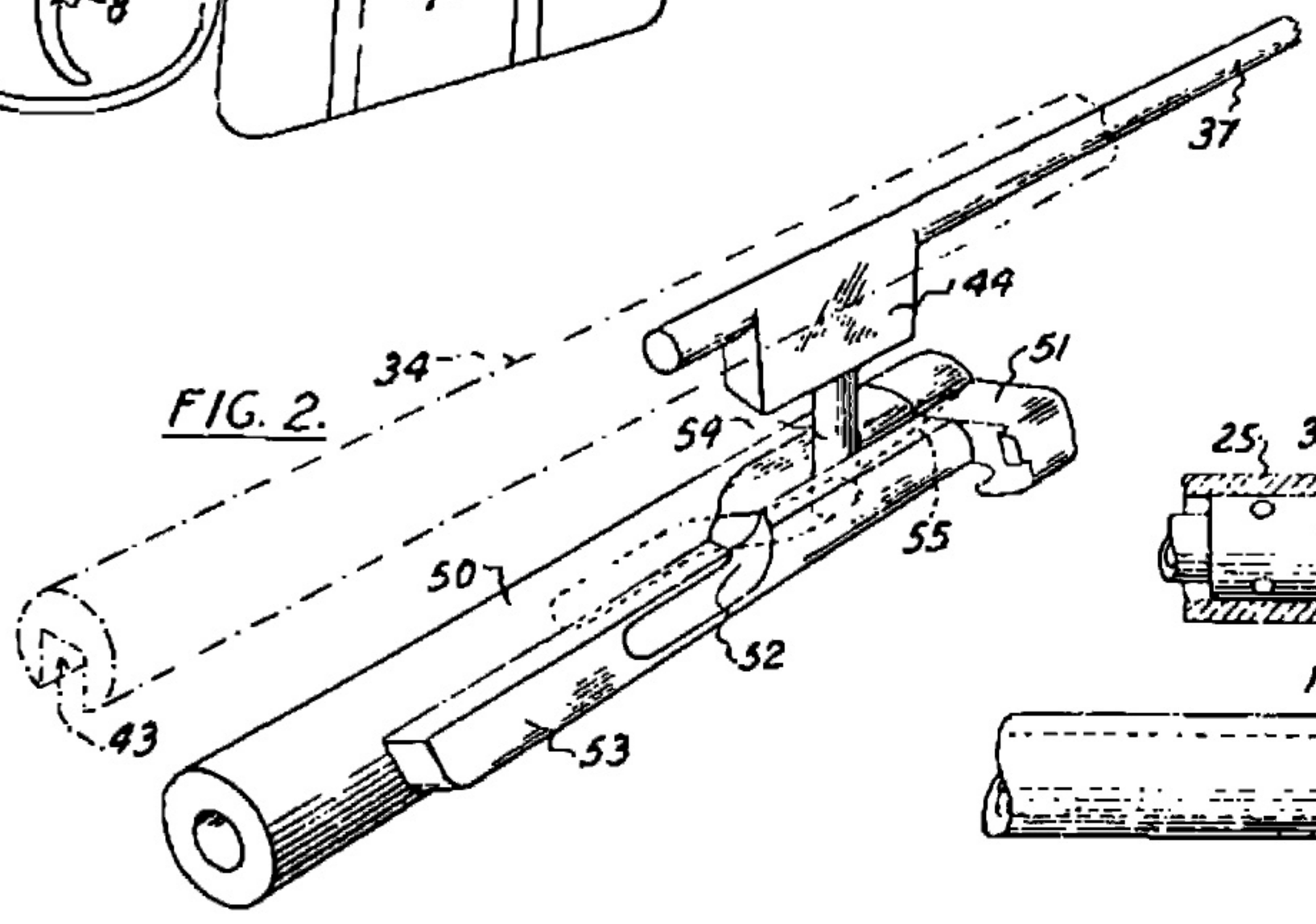

FIG. 2.

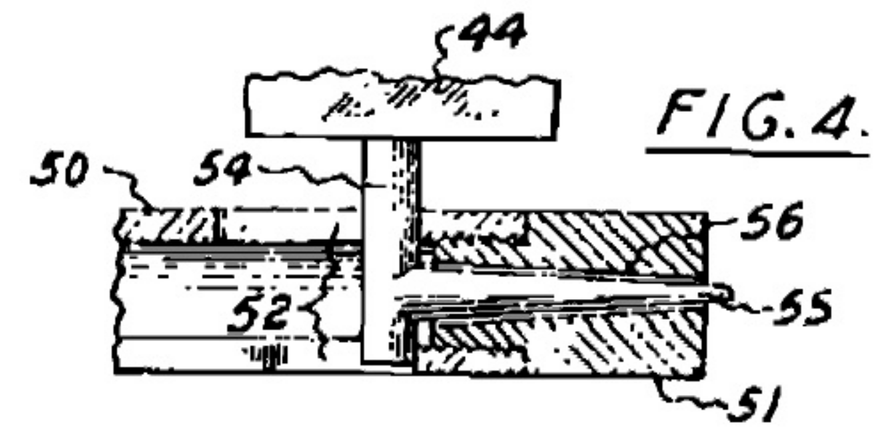

FIG. 4.

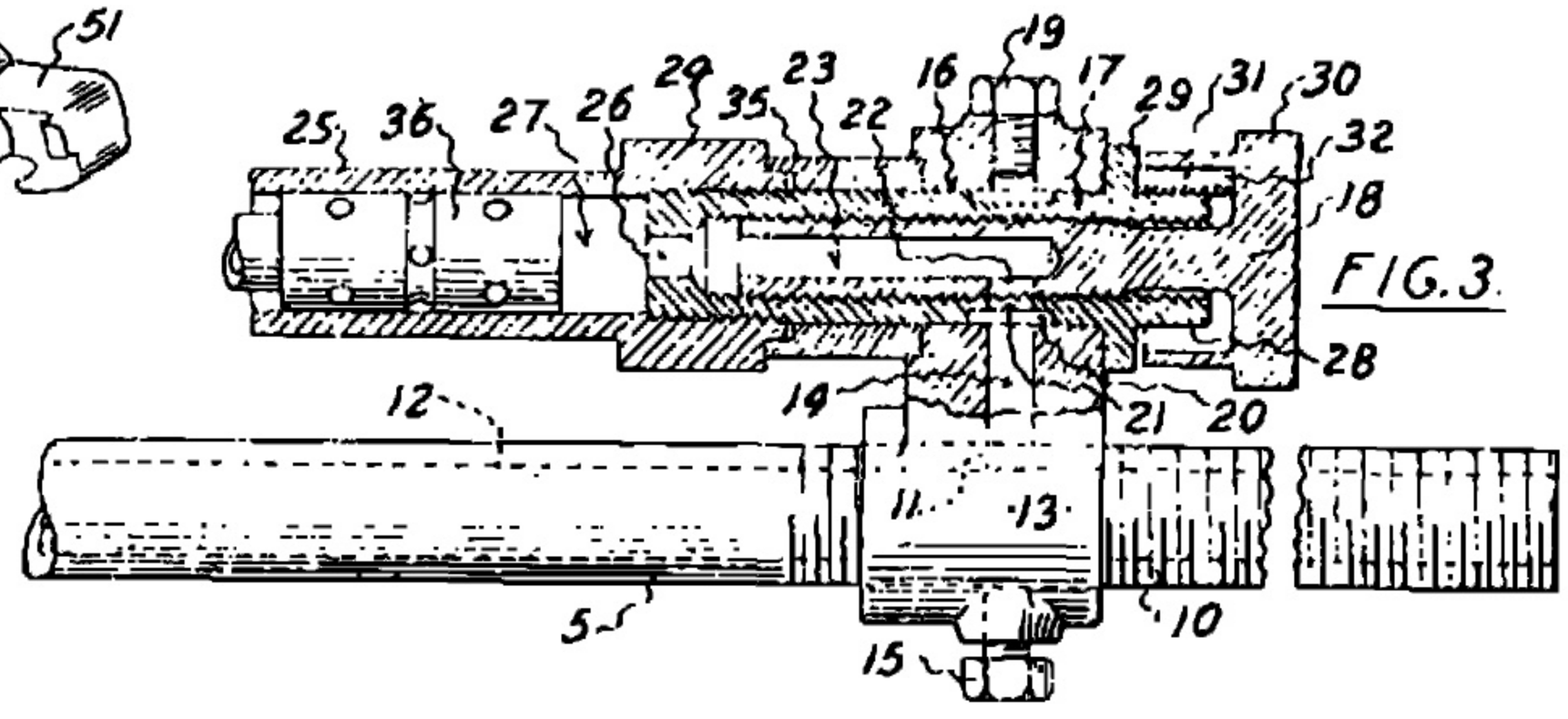

FIG. 3.

CONTEMPORARY AUSTRALIAN SELF-LOADING RIFLE

This is a more recent conversion and perhaps the most practical. From a date on the back of the drawing, it would appear to have been done in the early 1950's and the conversion was effected at an R.A.A.F. base in New South Wales, Australia.

A British 1901 Sparkbrook M.L.E. Mk I* rifle action was utilised, the other assorted S.M.L.E. parts applied were probably chosen from any available at the time. The gas tube is mounted along the top of the barrel which would obscure the conventional sights. In this case, the original Magazine Lee-Enfield rifle was a New South Wales issue, rack numbered 8689 and issue dated September 1906.

Unlike earlier Lee-Enfield conversions, the gas-operating system is quite advanced in design and more contemporary with the particular development period in the 1950's. There is no cocking piece required and the trigger sear mechanism permits self-loading only, rather than being automatic or selective fire.

LATE AUSTRALIAN S.M.L.E. SELF-LOADING CONVERSION— BOLT/PISTON GROUP
Gas piston rod (37), striker mount (44) and stem (54) which incorporates the firing pin (55). The striker stem (54) operates in a cam slot (52) cut into the original S.M.L.E. bolt rib (53). Rearward movement of the rod acting via the "S" shaped slot in the bolt (50) imparts a rotary action to open and close the breech bolt.

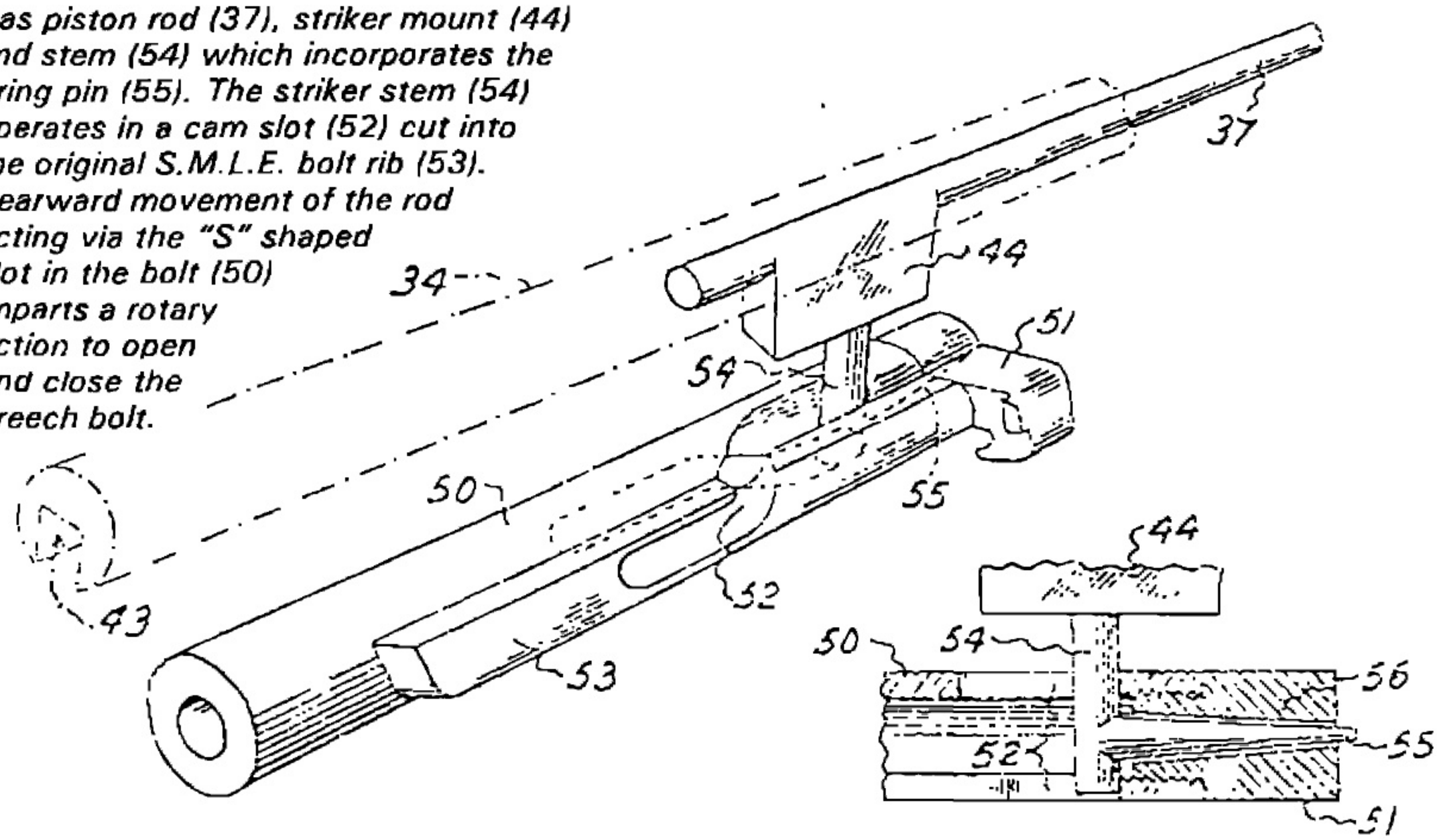

The threaded section of the barrel near the muzzle is for mounting and securing the gas block. The gas piston is a full-length type with a brass head and internal coil return spring.

The firing pin is integral with the post and it operates in the bolt cam slot. This one-piece arrangement is attached to the gas piston. The zig-zag slot cut into the bolt rib serves to cam the bolt into the opening and closing positions, during movement backwards and forwards. The one-piece firing pin and operating post operates directly through and upon the middle section of the bolt which results in a positive cyclic action.

The sear operates on a nib underneath the bolt and therefore dispenses with the need for the original S.M.L.E. cocking piece at the rear of the bolt. The cocking handle is fixed to the firing pin/post arrangement and thus reciprocates with the bolt. This however, is a decided disadvantage.

The trigger sear mechanism is innovative. It permits self-loading (semi-auto) only, the trigger cannot hold the sear down because it requires separate tripping for each cycle. The sear post works inside a block which replaces the original trigger/cocking piece sear bent. Trigger and bolt sears are on the same vertical plunger which operates inside the much-modified sear bent. The lower trigger sear portion is on a toggle link system with an external coil spring behind it, so as to keep the sear in the returned position.

Because of the unique trigger mechanism, the fore-wood is in two pieces, split longitudinally and secured by two transverse brass screws positioned near the front of this otherwise sporting style fore-end. This example is an inventor's prototype and function test model. The absence of provision for any sights would also seem to confirm this.

Screw holes drilled into the rear of the action body and at the top of the butt at the wrist would indicate that some type of protective shield was fitted, probably similar to that shown on the Howell pattern.

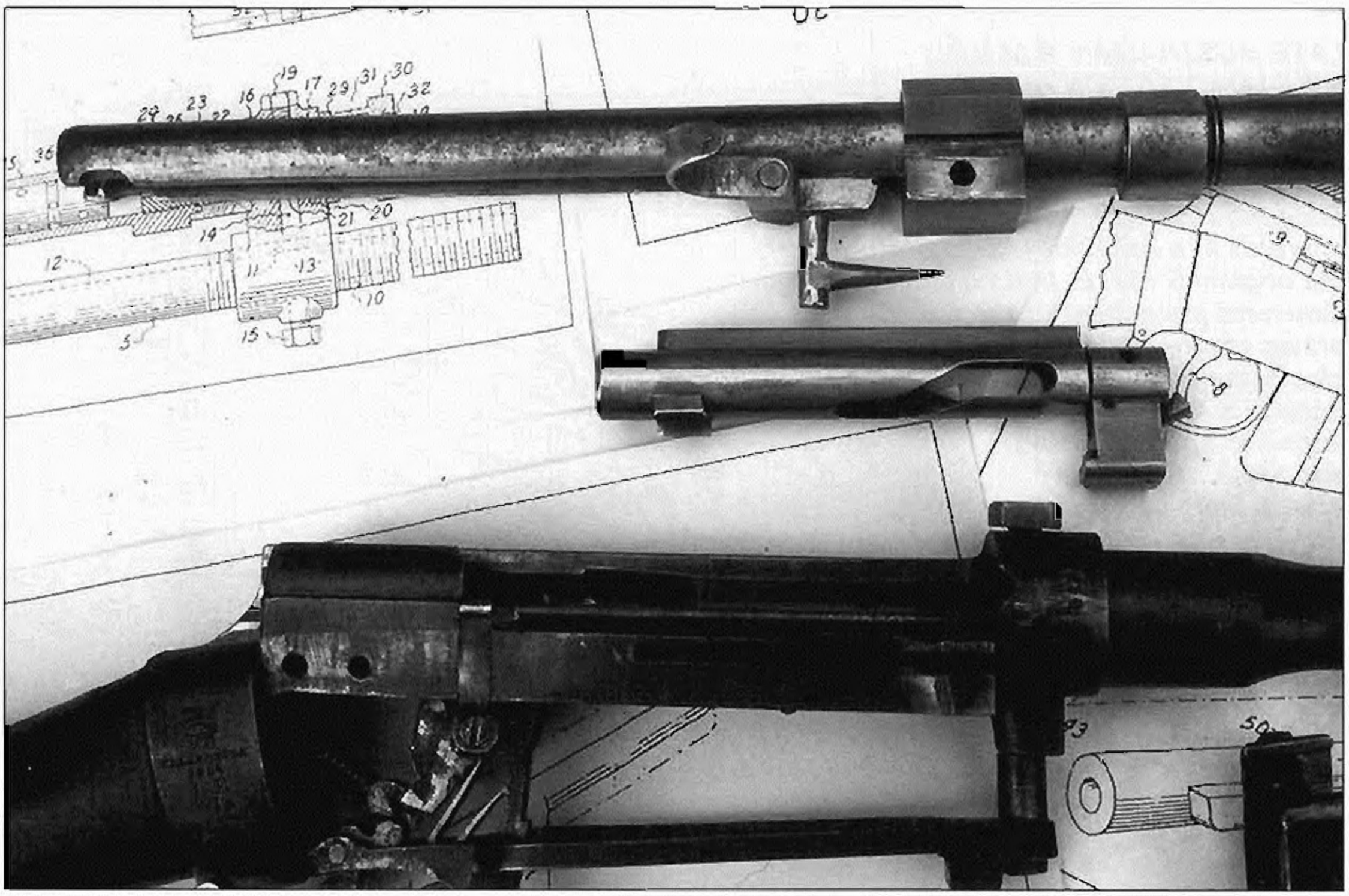

Only the New Zealand Charlton was set up like a light machine gun and its sustained fire role would surely have been short-lived. It was an emergency measure. The standard Lee-Enfield ten-round magazine was an obvious limitation for the self-loading conversions. It was during the later stages of development that the various inventors understandably looked towards increased capacity magazines for their converted models. Only the Charlton and Reider seems to have logically applied the larger capacity magazine.

The more recent Australian R.A.A.F. prototype described here adds certain innovations to the 'usual' auto-loading Lee-Enfield design. These should perhaps be attributed more to the general firearms advances in design which have occurred since the original wartime models were conceived and converted.

7.63mm HOWARD FRANCIS CARBINE

The Howard Francis carbine is a totally different concept to the previous .303-in. rifles, even though it was converted from the same S.M.L.E. firearm. The conversion or its inventors at least were connected with the British Navy as the initial approach on 14th February 1943 to the Ordnance Board was through the D.N.O. and the Admiralty. Particulars and drawings were forwarded from F.O.I.C. Simonstown while the sample conversion was sent by C.I.N.O.

The ensuing report was dated 31st January 1944 as a result of tests and evaluation conducted by the Chief Inspector of Small Arms at Woolwich on 4th December. This describes the conversion, making mention that the barrel was shortened and re-chambered but the bore and rifling remained the same. The trigger mechanism has been redesigned.

The magazine housing was modified in that part of the original S.M.L.E. magazine was retained to act as a brace and to position the new 12-round pistol magazine which, incidentally, suffered some feed problems during tests.

The rifle bolt assembly had been removed and replaced by a heavy breech-block which incorporated a moving striker and striker spring which oscillated backward and forward on the modified body. The usual principle of a coil spring was used to store the 'blowback' energy and impart forward motion to the breech block for its return.

The mode of action is the ordinary 'blowback' principle and the mechanism always comes to rest with the breech block in the forward position, closed on the chamber. The sights consist of a blade type foresight fixed to the front end of the barrel and a fixed 'V' backsight on the breech block. The report notes 'It is a single-shot weapon' which must be taken as not being fully automatic, in short, a self-loader.

Some poor definition photographs were included with the report, including an exploded parts view which is reproduced here as the specimen examined was not able to be stripped for a similar illustration.

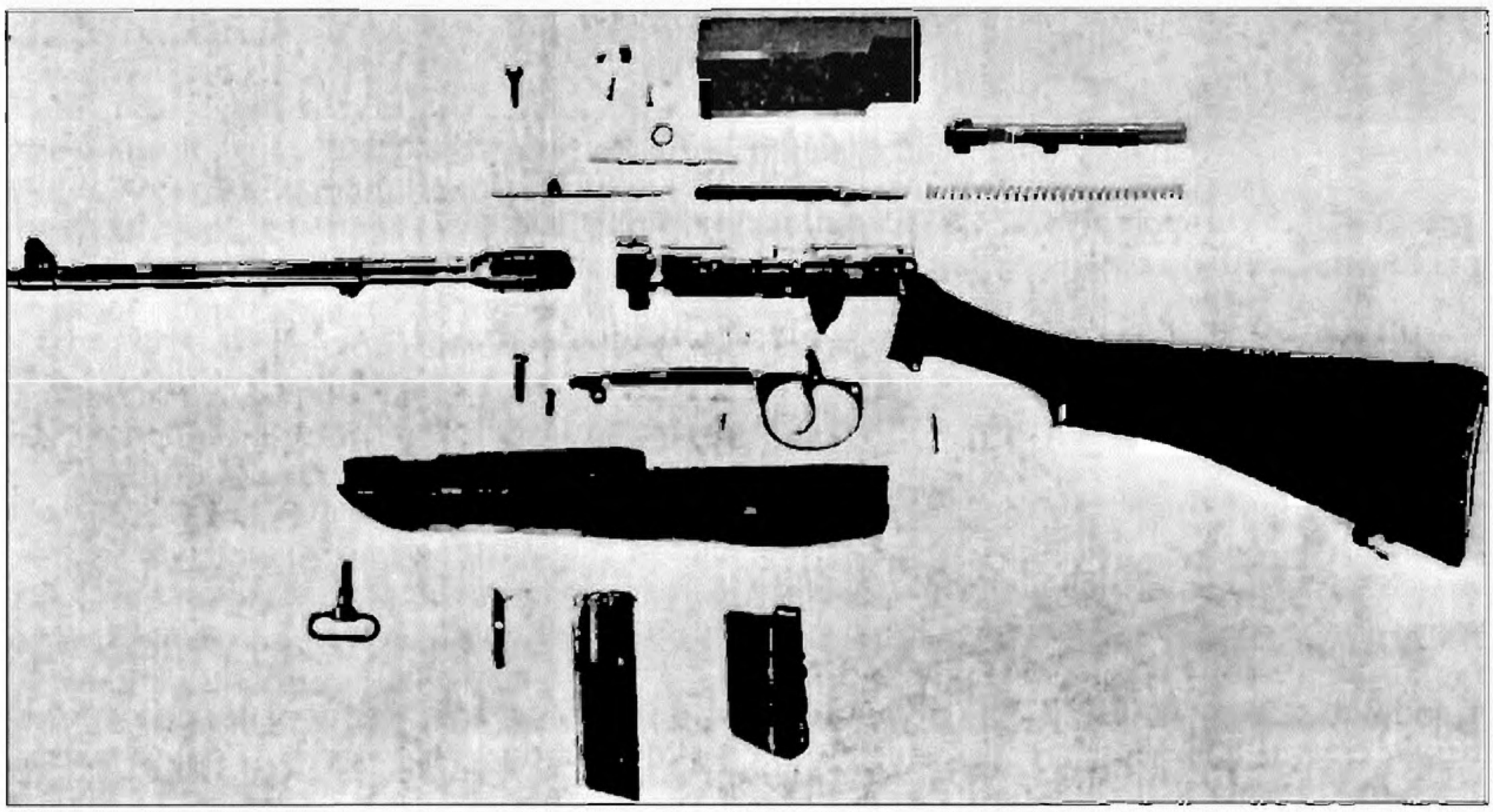

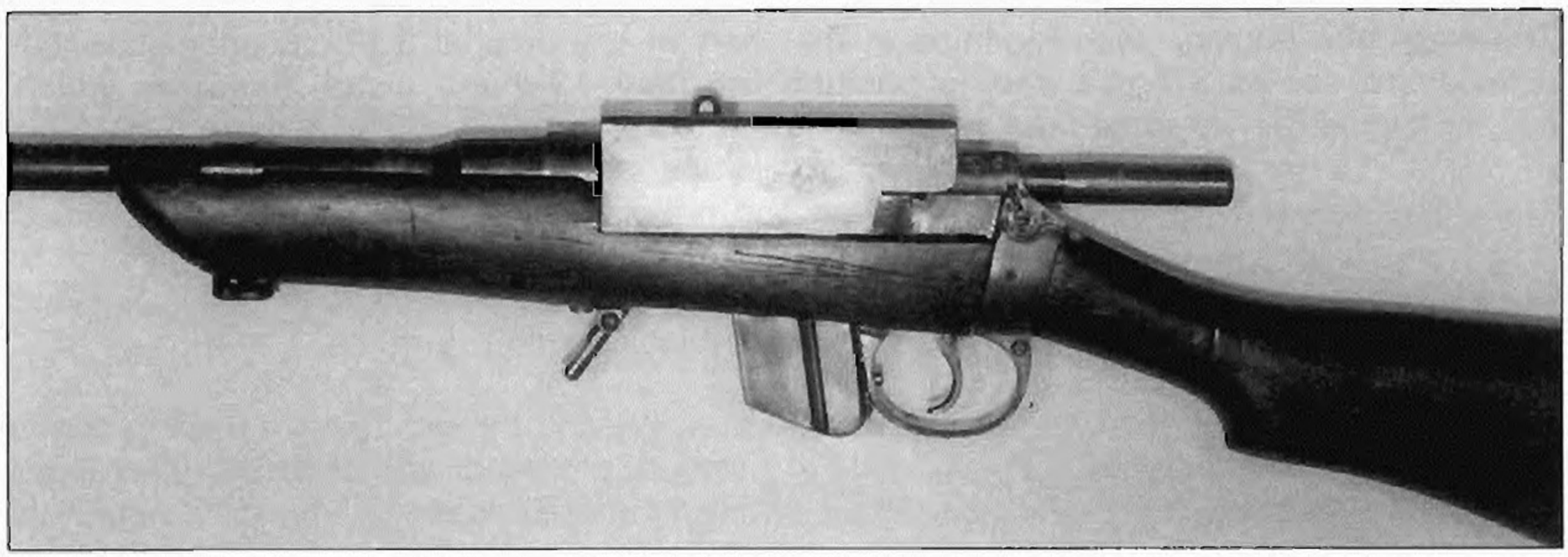

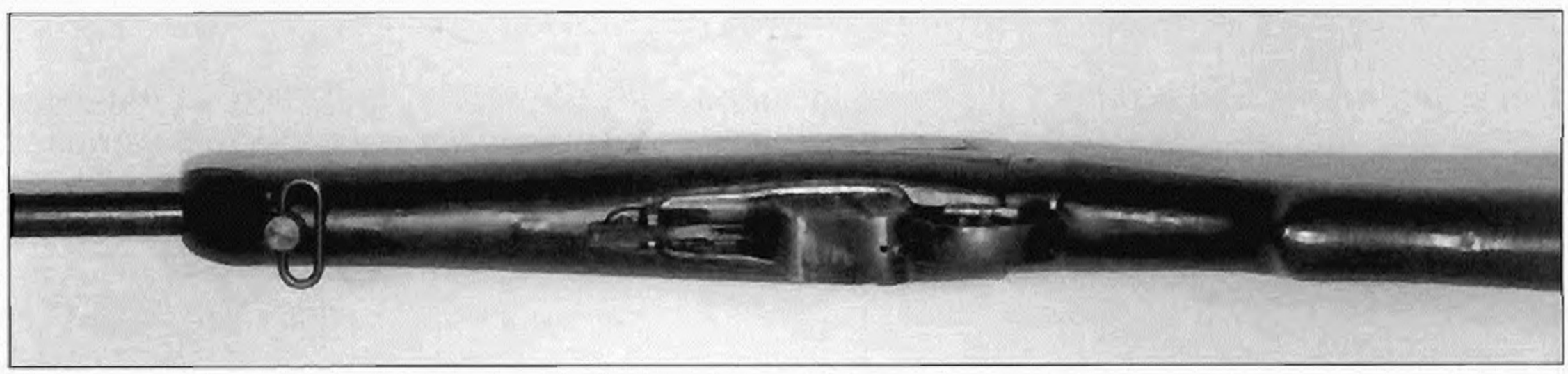

The O.B. Proc. report (No. 26,372) on loading, firing and the action mechanism do not containing anything surprising so there is no need to reproduce them here. In the functioning trials, the weapon failed to shoot so minor repairs were carried out and it still failed to operate. Loading each round individually, accuracy diagrams were obtained at 30, 50, 100 and 200 yards. At 30 yds. it recorded a 1 x 3 in. group, at 50 yds. a 3.5 x 4.5 in. group, at 100 yds. a 6 x 7 in. group and at 200 yds. the size had expanded to 14 x 18 inches.

It was observed that while the grouping was consistent and reasonable close, the MPI was always high and to the left. The report concluded that the feed problem related to the magazine, 'almost invariably the breech block in its forward movement rode over the leading round in the magazine instead of it being fed into the chamber.'

Concluding the report, the Ordnance Board noted that the weapon needed further development. This seems to have been the end of the matter as the Howard Francis carbine does not appear again later.

IDENTIFICATION & MARKINGS

Markings found, or likely to be found, on the De Lisle Commando Carbines and self-loading and automatic conversions are relative to the original rifle from which the conversion was made and any markings that may have been stamped or engraved during and after conversion. This is important as reproductions of this class of Lee-Enfield are available and the value of an original piece compared with a modern facsimile is considerable.

De Lisle carbines were converted from No. 1 rifles, so the receiver will have the original maker's name on the butt socket, beneath the bolt handle. Some De Lisle replicas have been offered more recently, those built on the No. 4 action are obvious reproductions. Sterling and sub-contractor marks or codes are often evident on original conversions—

Sterling Engineering	S.E.Co	S109
Sterling Armament, Northampton		M619
C.F. Moore & Sons	CFM	S238
H. Webb & Co., London N17		S293
Holland & Holland, London		S51
Enfield RSAF repair program, 1948		FTR-48
Government acceptance marks		⅄ ⅄

Other Lee-Enfield components were cannibalised or drawn from new made spares. New timber furniture was beech instead of walnut and other features of WW2 No.1 rifle production are likely to be noticed in examining De Lisle conversions. There are marked differences between the Ford Dagenham models and Sterling Engineering production, in the sights, furniture, magazine, muzzle and metal finish. Rifle designation and serial numbering of the carbines, stamped in the appropriate positions, is also a good indicator.

Charlton, Howell, Rieder, Ekins, Howard Francis and such self-loading conversions cannot be so easily generalised upon. There are a few recently-built Charlton rifles in collections as original drawings and plans have been used in their construction. Again, a good knowledge of Lee-Enfield rifle manufacture and their markings are instrumental in helping to detect a modern reproduction or a fake.

Similarly with copies of the other auto-loading conversions, a good reference library is necessary to help determine most fakes. In any reproduction, there is likely to be some clues offered which can be detected by the educated eye. Prototypes often have identification numbers or indicators for logging during tests.

The more modern Lee-Enfield conversion featured on pages 42-43 came along with engineering drawings and the source revealed some of the history of the particular rifle. Therefore the identification was not a very difficult process. Probably the biggest mystery regarding this rifle is why an early Magazine Lee-Enfield was used as the basis for conversion rather than a later model SMLE. Most engineering drawings are dated or marked which provide further clues as to their origin and history. Official, patent, factory and service drawings and sketches are also similarly annotated.