FM 3-22.90

MORTARS

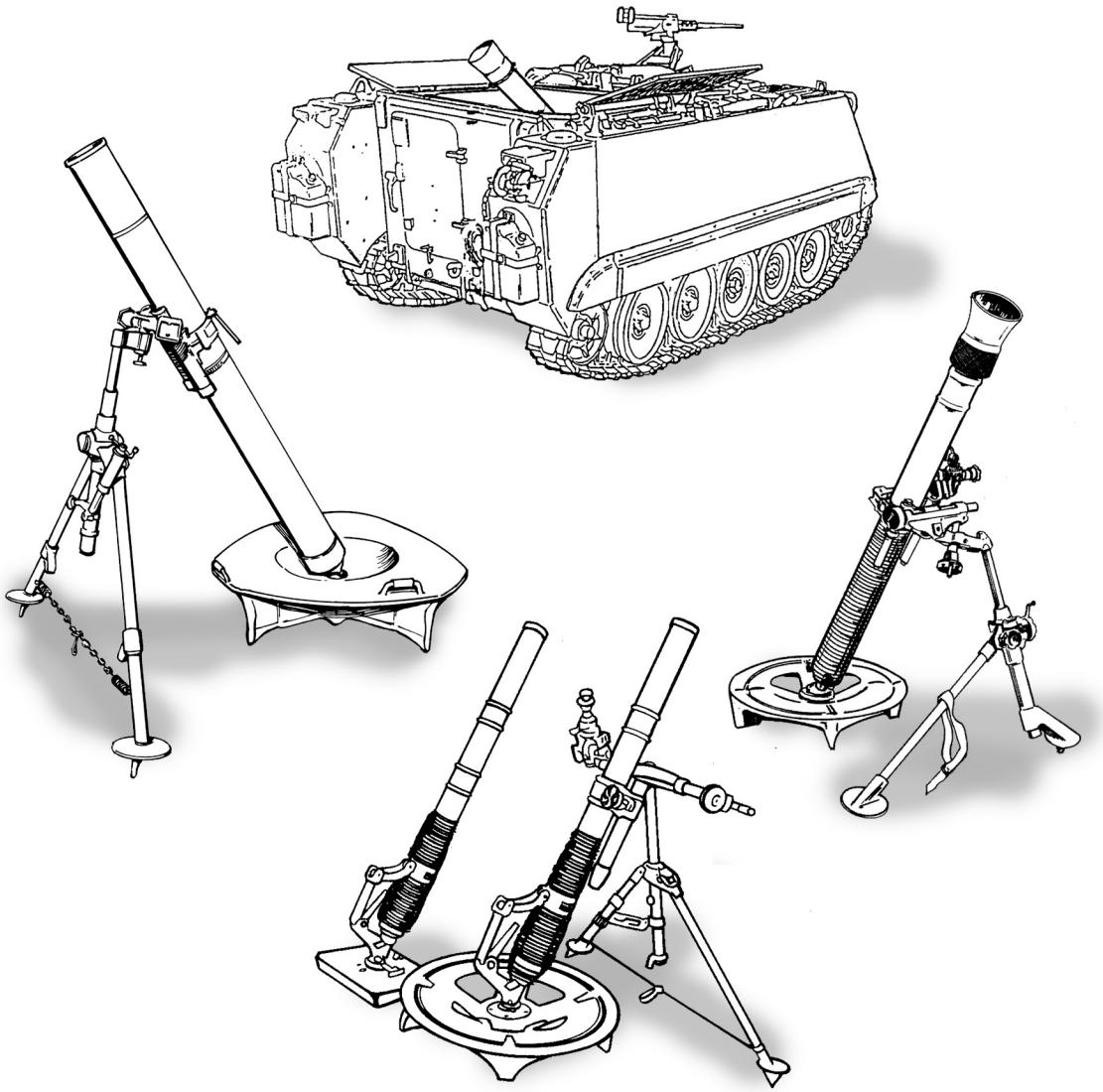

DECEMBER 2007

DISTRIBUTION RESTRICTION:
Approved for public release; distribution is unlimited.

HEADQUARTERS
DEPARTMENT OF THE ARMY

(1) The squad leader enters TYPE by clicking the down arrow and choosing WAYPOINT from choices of FIRE AREA or WAYPOINT. He also enters or selects data for the following fields: EASTING, NORTHING, ALTITUDE (ALT), ZONE, HEMISPHERE, and DATUM. The squad leader then clicks START NAV, which automatically transmits the status "Operationally Moving" (OpMov) to the FDC. It also activates the driver's display. The screen shown in Figure 7-4 is then displayed.

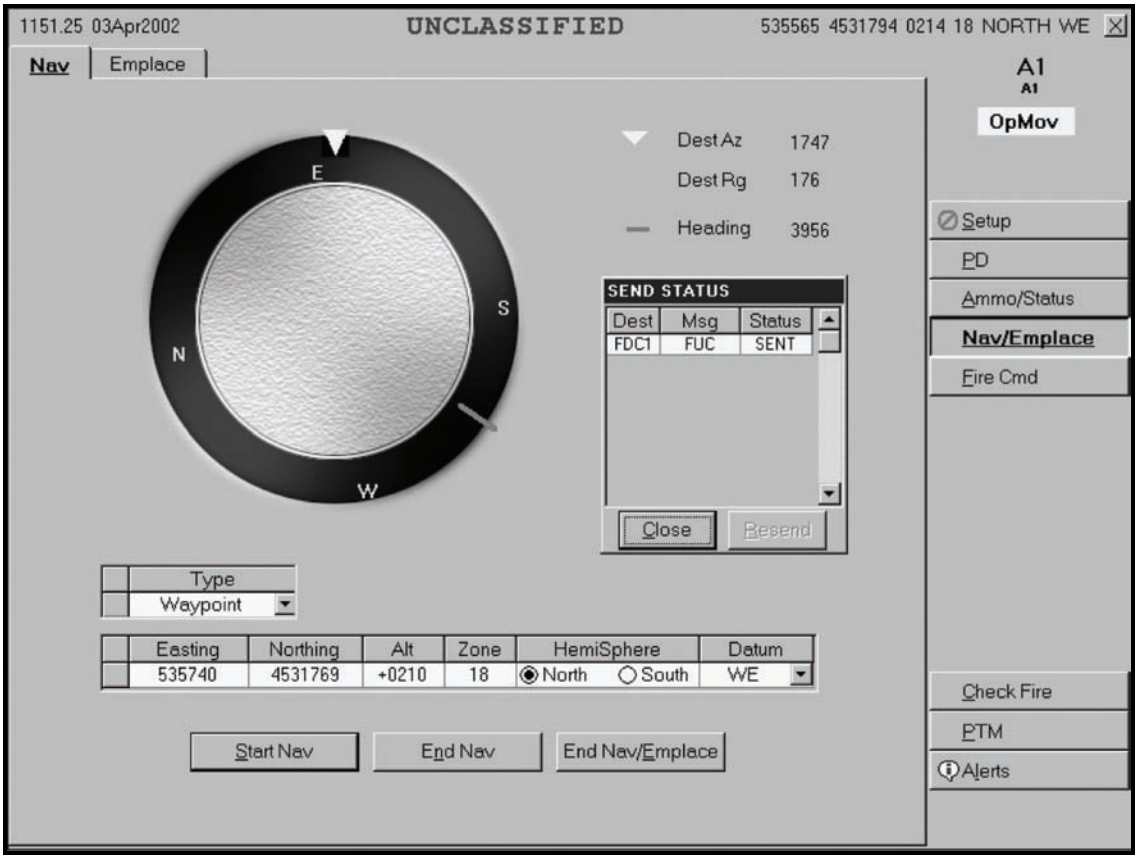

Figure 7-4. "Navigation/Emplacement" screen: Send status.

(2) After activation, the driver's display shows the driving direction and distance (Figure 7-5). The driver's display shows "Steer To" arrows indicating the direction in which to turn. The destination range and current position is updated continuously until the vehicle approaches the specified area.

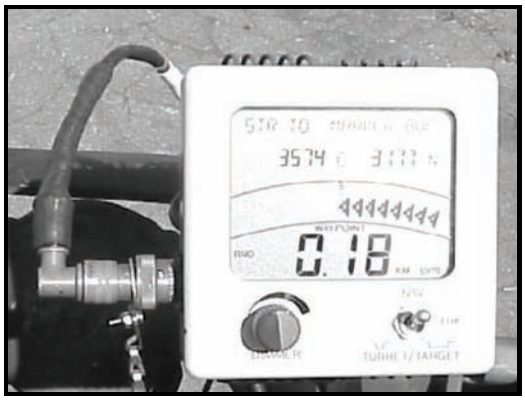

Figure 7-5. Driver's display showing steering directions, distance, and position.

(3) The squad leader verifies that the gun status is changed to "Operationally Moving" (OpMov). The *Send Status* box also appears, specifying that an "OpMov" status was sent to the FDC. The CI now includes the destination azimuth *(*DestAZ*)*, destination range *(*DestRg*)* and heading (Figure 7-6). If the pointing device is aligned, a position update will be sent every 1,000 meters.

(4) When the vehicle/gun is within 30 meters or less of the waypoint, the driver's display indicator will display "Arrived" (Figure 7-7). The CI however, may not display "Arrived" if the CI has been set for a radius other than 30 meters, in which case the squad leader determines when the vehicle/gun has arrived by the destination range of 30 meters or less.

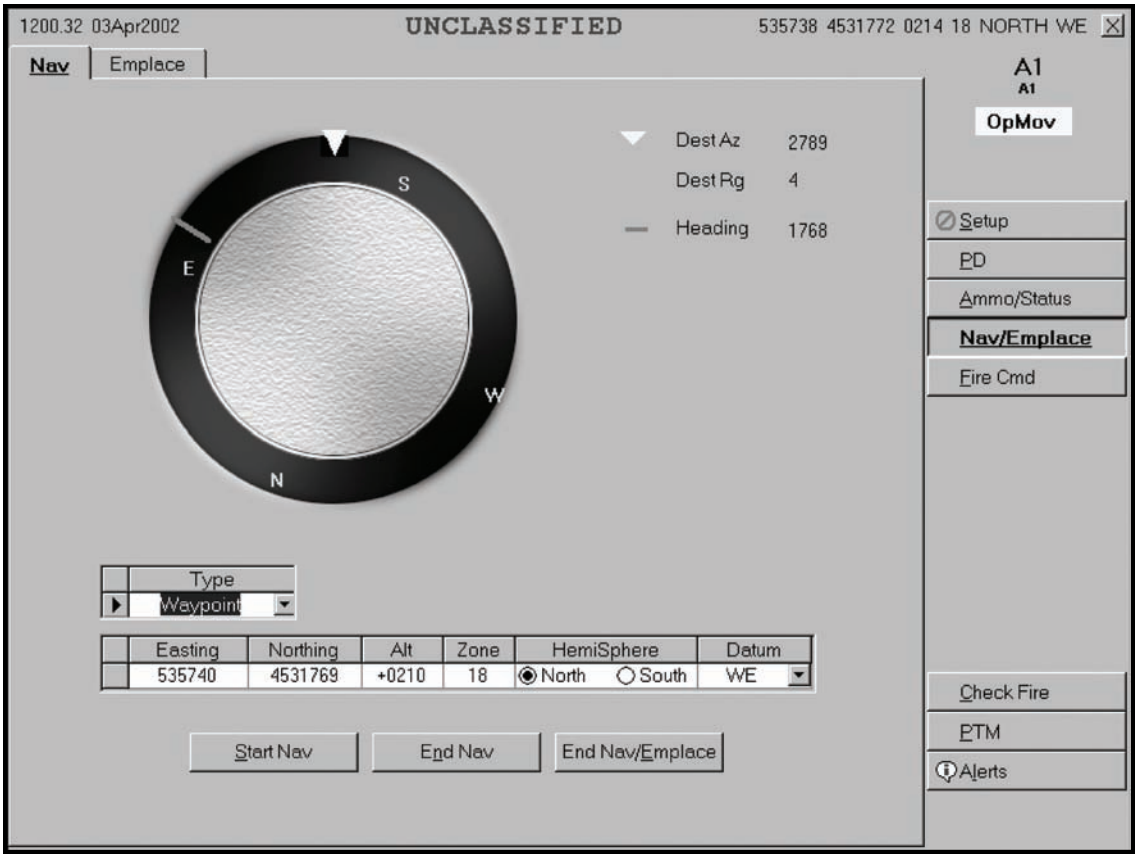

Figure 7-6. "Navigation/Emplacement" screen: destination azimuth, destination range, and heading.

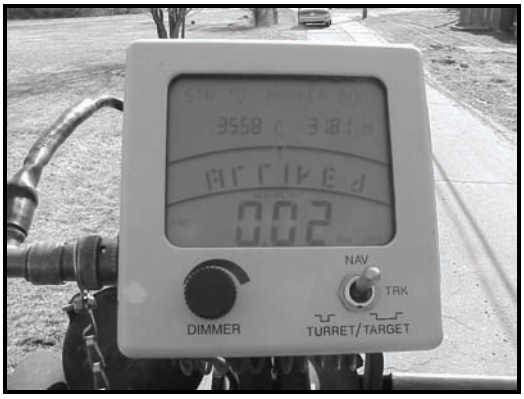

Figure 7-7. Driver's display showing arrival at the waypoint.

(5) The driver continues to maneuver the vehicle left or right until the driver's display indicator is within a minimum of 20 mils and a maximum of 100 mils of the waypoint.

(6) When the destination is reached, the squad leader clicks END NAV, which sends the FDC an "Operationally Stationary" (OpSta) status and the gun's current location. The *Send Status* box appears, specifying that the message was transmitted and received by the FDC (Figure 7-8). At the waypoint, the squad leader accomplishes the task given or waits for further orders.

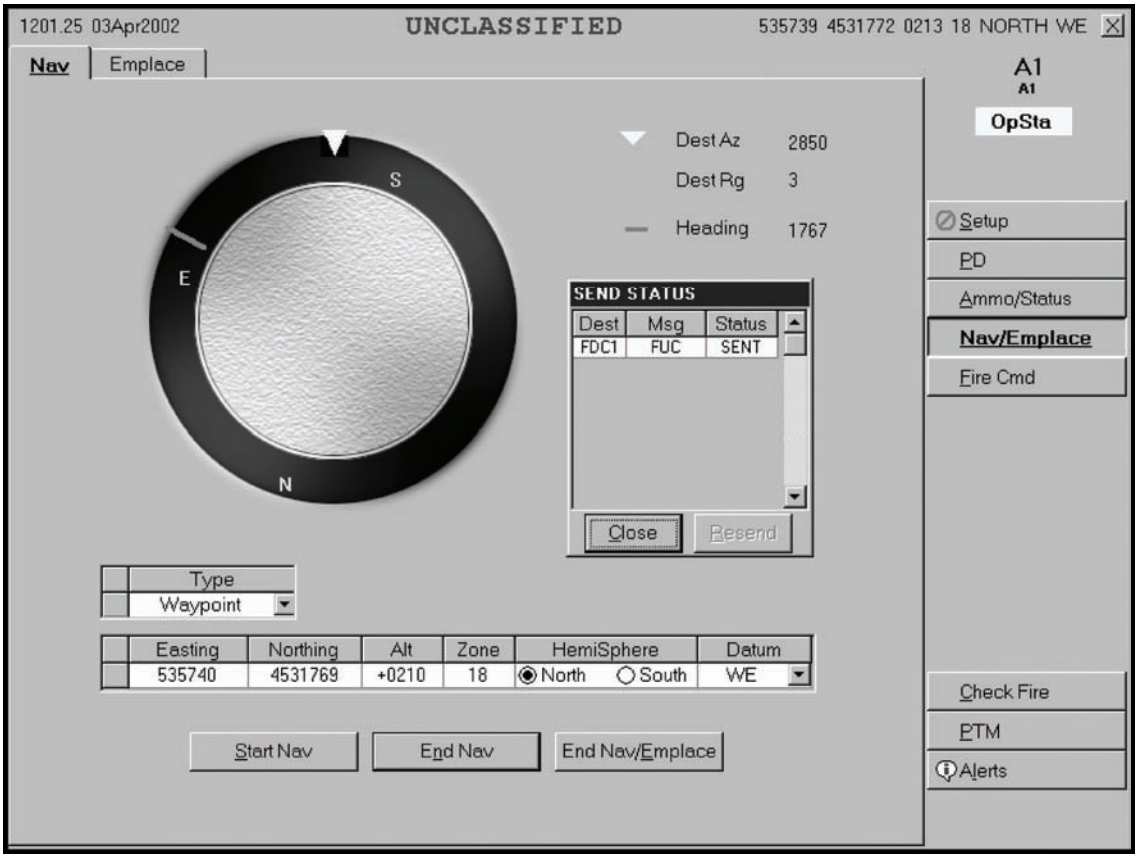

Figure 7-8. "Navigation/Emplacement" screen: message transmitted and received by the FDC.

NOTE: The current position, which is shown in yellow on the "Position" screen in Setup and which has also been sent to the FDC, is the locked-in current position. The position shown in the upper right-hand corner of the CI may change slightly due to PLGR drift and may differ from the locked-in position.

NAVIGATION TO FIRE AREA

7-13. On receipt of a movement order from the FDC, transmitted through PTM or voice, the squad leader selects NAV/EMPLACE button in the control button area and clicks the *Nav* tab. The "CI" screen shown in Figure 7-9 is displayed. In addition to the fields in the "Waypoint" screen, this screen has: FIRE AREA RADIUS, AZIMUTH OF FIRE, and ELEVATION fields.

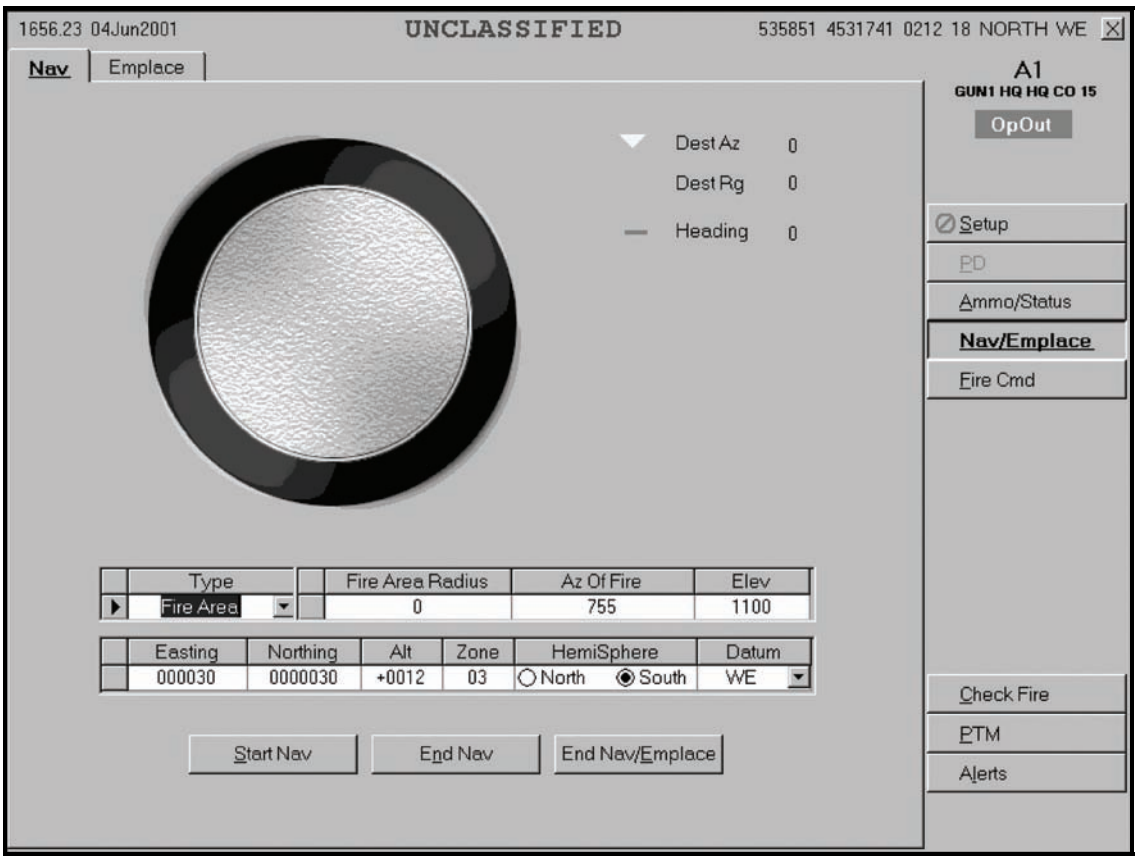

Figure 7-9. "Navigation/Emplacement" screen: fire area.

(1) The squad leader enters TYPE by clicking the down arrow and choosing FIRE AREA from choices of FIRE AREA or WAYPOINT, and then enters the received FIRE AREA RADIUS, AZIMUTH OF FIRE (AZ of Fire), and ELEVATION (Elev). He also enters the received EASTING, NORTHING, ALTITUDE (Alt), ZONE, HEMISPHERE, and DATUM data into the applicable fields.

(2) The squad leader clicks START NAV. The driver's display is activated and the driver begins to navigate to the firing position using the steering arrows and distance displayed on the screen (Figure 7-10).

Figure 7-10. Driver's display activated.

(3) On the CI, the gun status is changed to "Operationally Moving" (OpMov). The *Send Status* box appears, specifying that an "OpMov" status was sent to and received by the FDC. The CI now displays destination azimuth (DestAZ), destination range (DestRg) and heading.

(4) If the pointing device is aligned, a position update will be sent every 1,000 meters.

(5) When the vehicle/gun is within 30 meters or less of the fire area, the driver's display indicator shows "Arrived." If the FIRE AREA RADIUS of 30 meters was entered, the squad leader's CI will also indicate "ARRIVED."

NOTE: If FIRE AREA RADIUS entered in the CI was more than 30 meters, the CI will indicate "ARRIVED" before the driver's display does, because the radius is not changeable in the driver's display.

FIRE COMMANDS

7-14. The FDC uses fire commands to give the mortar sections the information necessary to start, conduct, and cease fire. The fire commands are used for all types of shell and fuze combinations. The three phases of the fire command are the initial fire command, subsequent fire command, and the end of mission.

INITIAL FIRE COMMAND

7-15. The squad uses the following procedures when they receive an initial fire command.

(1) The squad leader receives and carries out a movement order from the FDC to proceed to his waypoint/fire area. The gunner ensures that the turntable and traversing extension are both centered, and that the traversing mechanism is center of traverse. The squad leader updates and verifies AMMO and STATUS.

(2) When gun orders are sent from the FDC, the action is indicated by an "I" (immediate) in a red circle beside the FIRE COMMAND button (Figure 7-11). The "Fire Command" screen is automatically displayed and the words "NEW GUN ORDERS" appear at the top of the gun order.

(3) The gun orders include: method of control (MOC), method of fire (MOF), target number, phase, rounds, lot, shell, charge, fuze, and time (fuze time). The squad leader reads the gun order and acknowledges receipt by clicking the OpACK button. The gunner's display and driver's display are now activated.

(4) If necessary, the driver maneuvers the vehicle so that the mortar tube is pointing a minimum of 20 mils and a maximum of 100 mils of the azimuth of fire. The gunner and assistant gunner manipulate the gun system to bring it to the correct azimuth and elevation displayed on the gunner's display. The gun system is ready to fire when the word "LAID" appears in both AZ and EL of the gunner's display. After firing, the squad leader clicks SHOT and, if more than one round is shot, ROUNDS COMPLETE.

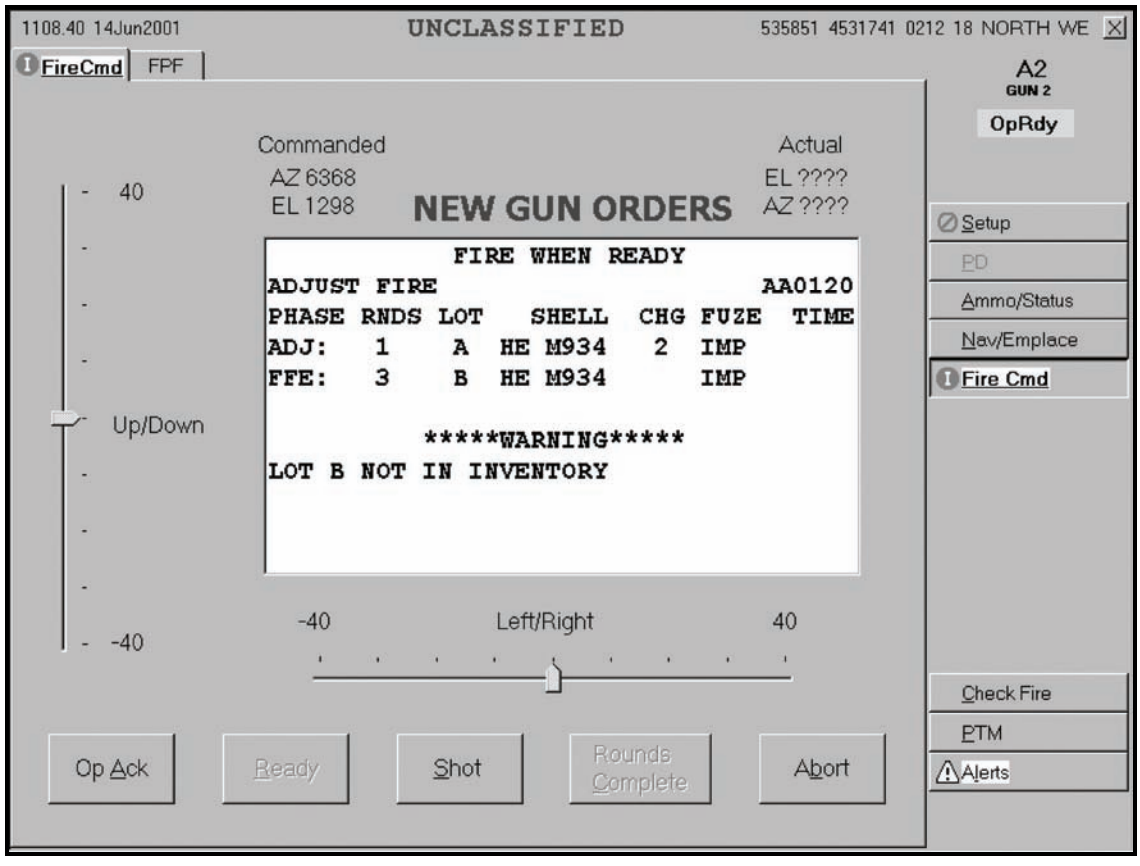

Figure 7-11. "Fire Command" screen.

SUBSEQUENT FIRE COMMAND

7-16. The operator uses subsequent "Fire Command" screen (Figure 7-12) to receive further commands. The words "MORTARS LAID" in large blue letters are also displayed. If there is a SUBSEQUENT ADJUST, the squad leader receives another gun order. The MFCS calculates solutions, and the gun crew performs the same duties as in the CFF. The crew continues to respond to commands until the gun is adjusted. Once adjusted, the FDC sends an FFE gun order.

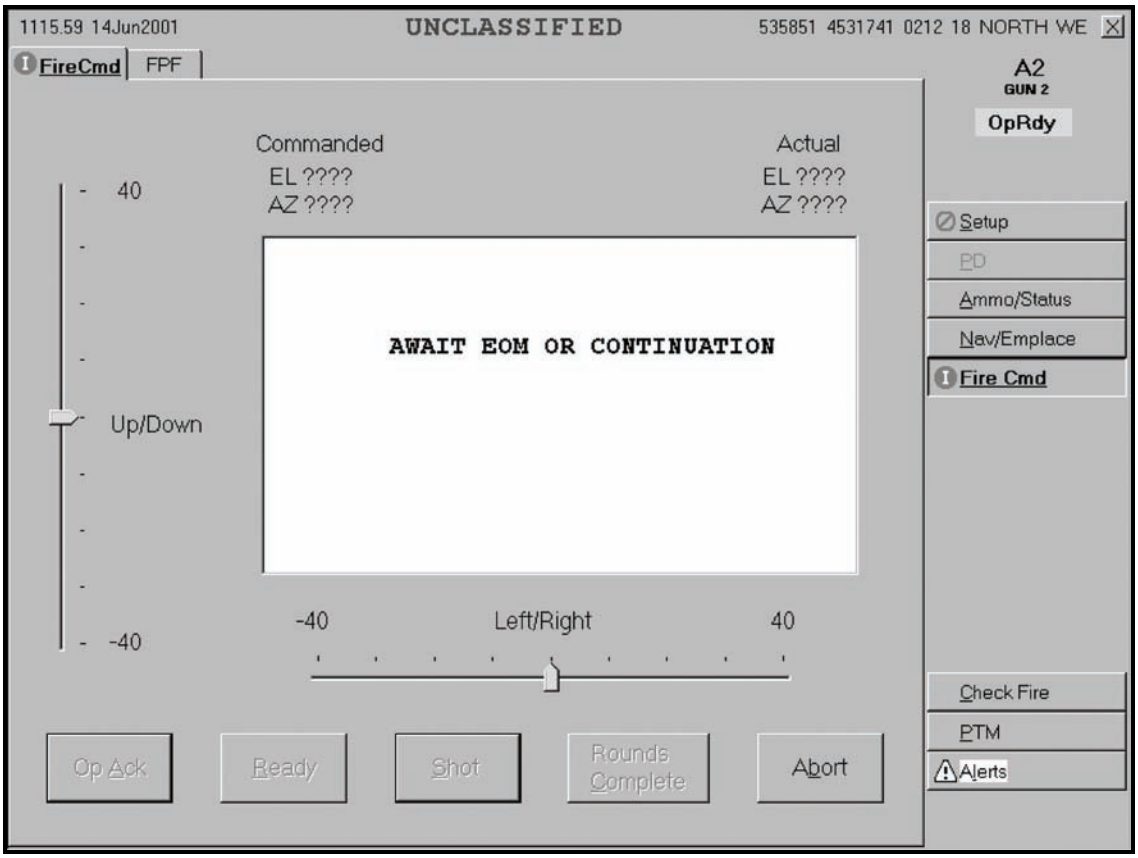

Figure 7-12. Subsequent "Fire Command" screen.

END OF MISSION

7-17. Upon receipt of the end of mission command, the "End of Mission" screen displays (Figure 7-13), and the operator confirms the amount of ammunition expended. If correct, he clicks YES. If incorrect, he clicks NO. (When NO is clicked, the "Ammo/Status" screen is displayed and allows a change to the ammunition status.) When YES is clicked, the "Not In Mission" screen is displayed (Figure 7-14).

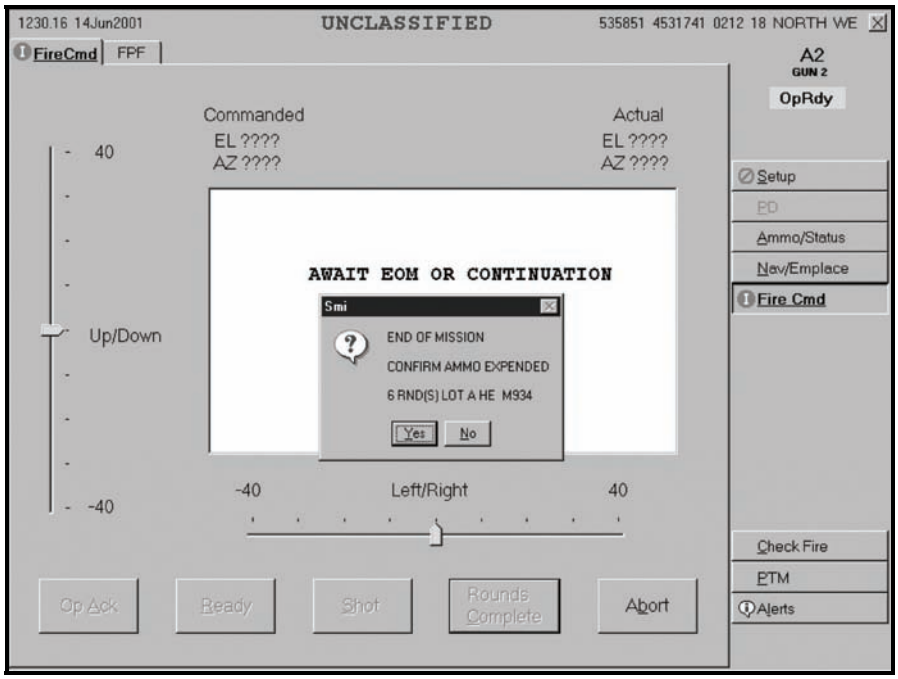

Figure 7-13. "End of Mission" screen.

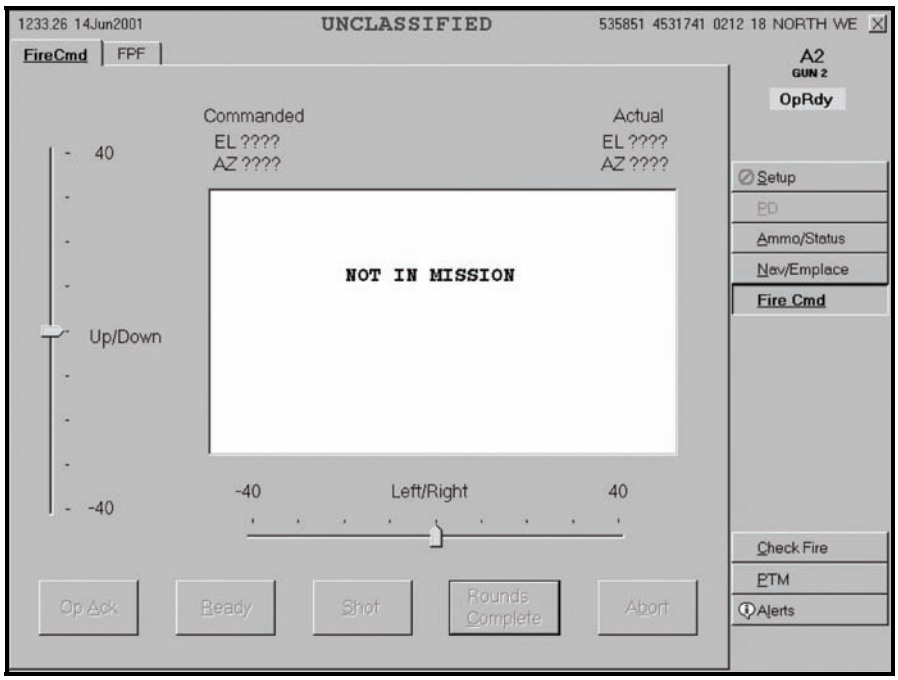

Figure 7-14. "Not in Mission" screen.

FINAL PROTECTIVE FIRES

7-18. These are the procedures for receiving and carrying out a final protective fire (FPF) mission. The MFCS differentiates between an assigned FPF, where the guns are adjusted before an FFE, and a stored FPF, where the guns fire the FPF when ready. The gun MFCS can store only one FPF at a time. If an active mission is in progress and the order to fire the FPF is received, the FPF mission takes precedence.

FIRE COMMAND FOR AN ASSIGNED FINAL PROTECTIVE FIRE

7-19. Gun orders for an FPF mission are indicated by an "I" (immediate) in a red circle beside the FIRE COMMAND button. The "Fire Command" screen is automatically displayed (Figure 7-15) and the words "NEW GUN ORDERS" appear at the top of the gun order. The method of control is AT MY COMMAND, method of fire is ADJUST FIRE and method of attack is DANGER CLOSE.

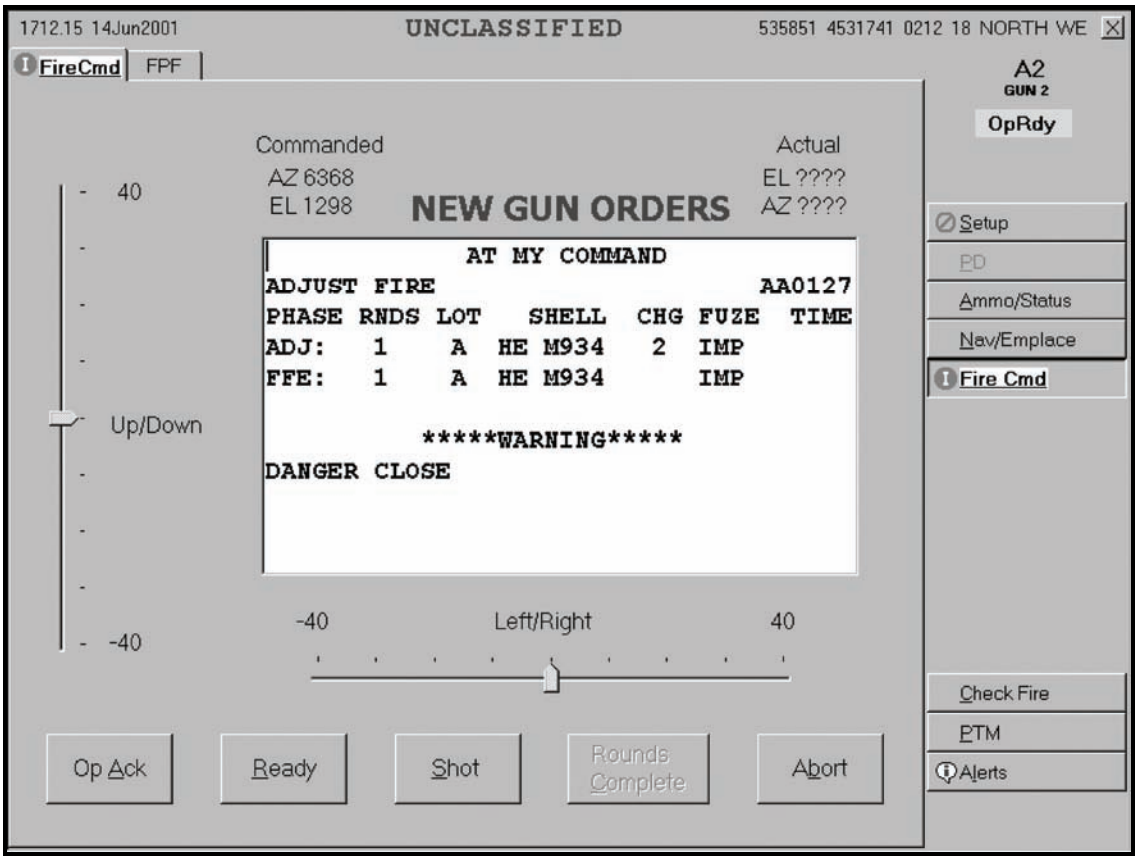

Figure 7-15. Fire command for an assigned FPF.

(1) The squad leader reads the gun order and acknowledges receipt. The gunner's display and driver's display are now activated.

(2) If necessary, the driver maneuvers the vehicle to within a minimum of 20 mils and a maximum of 100 mils of the azimuth of fire. The gunner and assistant gunner manipulate the gun system. The gun system is ready to fire when the word "LAID" appears in both AZ and EL of the gunner's display. The squad leader sends a "READY" message to the FDC and waits for a reply to fire.

(3) After firing the first round, the squad leader sends SHOT. The *Send Status* box is displayed and then a screen message displays "Await EOM" or "Continuation."

(4) If there is a SUBSEQUENT ADJUST, the squad leader receives another gun order and acknowledges the order. The gun squad then follows the same procedures previously described.

(5) When the gun is adjusted, the FDC sends an FFE gun order. The method of control is AT MY COMMAND.

(6) Upon receipt of the end of mission command (Figure 7-16), the operator confirms the amount of ammunition expended. (He can manually change the amount of ammunition expended, if necessary.) When YES is clicked, the message "NOT IN MISSION" is displayed.

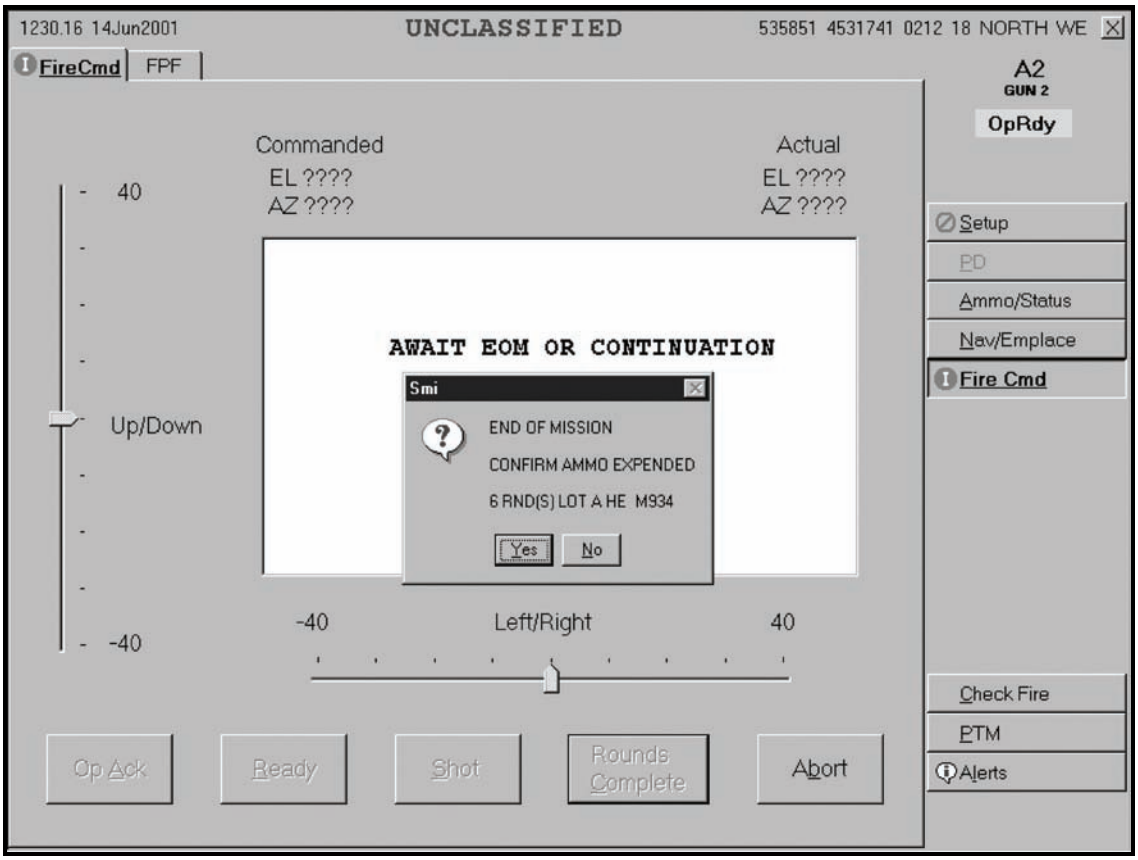

Figure 7-16. End of mission.

(7) The FPF is stored in the FPF mission buffer. The operator can click on the FPF tab to verify that the FPF has been stored.

FIRE A STORED FINAL PROTECTIVE FIRE MISSION

7-20. When the FDC sends the fire the FPF command, the FPF tab is enabled and the "FPF" screen is displayed (Figure 7-17).

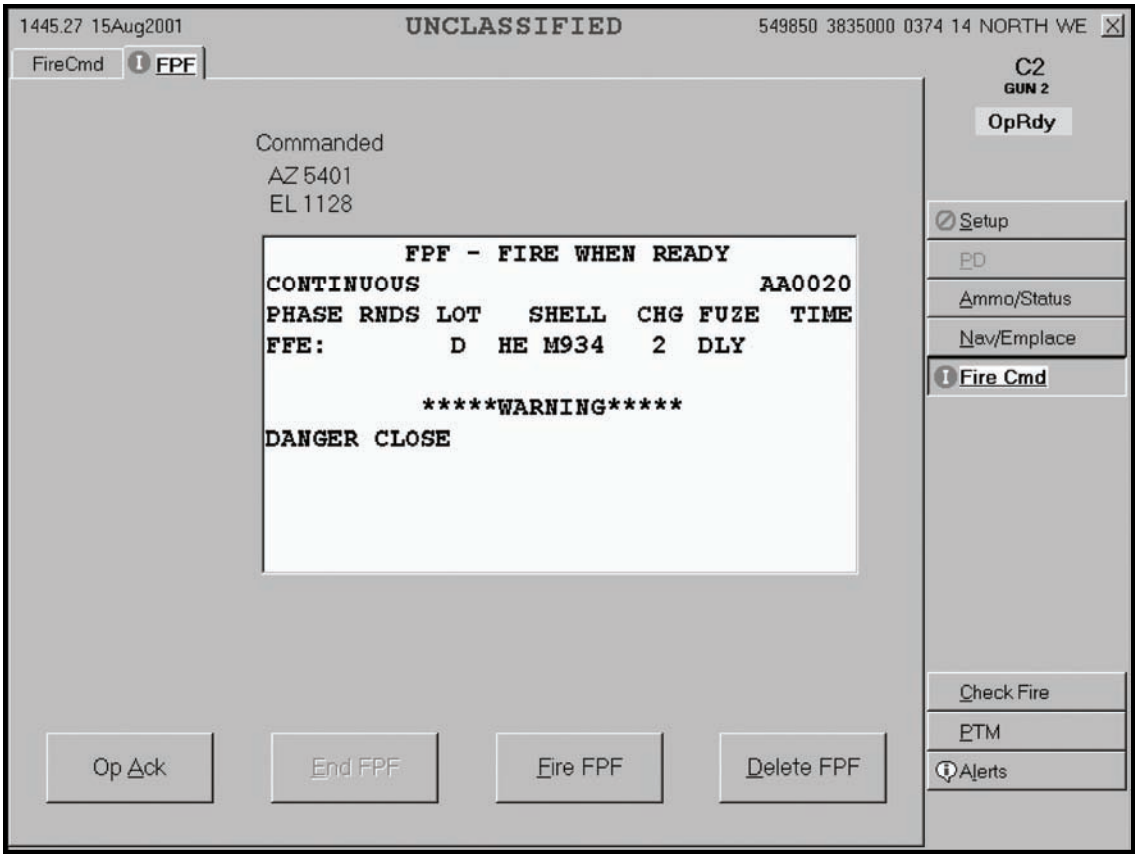

Figure 7-17. Fire the stored FPF.

(1) The squad leader reads the FPF and clicks OpACK to acknowledge receipt. The gunner's display and driver's display are activated.

(2) If necessary, the gun squad manipulates the gun as previously described until the word "LAID" appears in both AZ and EL of the gunner's display.

(3) Begin firing and continue until the "END FPF" message is sent. An "END OF MISSION" message is also sent.

Chapter 8

Fire Without a Fire Direction Center

The use of the target-grid method of fire control may not always be possible or desirable for placing fire on a target. Communications failure, casualties from enemy fire, lack of equipment, or the tactical situation may require that one or more mortars be employed without an FDC. Firing without an FDC, however, greatly increases the vulnerability of the crew and substantially reduces the capabilities of the weapon.

SECTION I. FIRE PROCEDURES

When the squad is under squad control, the gunner or an FO from the squad observes the target area. Adjustments and fire commands are sent directly to the mortar crew. The two methods used to fire the mortar without an FDC are *direct lay* and *direct alignment*. In the direct-lay method, the gunner sees the target through the mortar sight. No directional posts, aiming posts, FO, or FDC are used. In the direct-alignment method, an FO (usually the squad leader) observes the target near the mortar or the gun-target (GT) line. He observes the fall of the rounds, makes corrections relative to the GT line, and gives gun commands directly to the mortar squad.

NOTE: Employment of mortars without an FDC is only temporary—the FDC should be established as soon as possible.

ADVANTAGES AND DISADVANTAGES

8-1. Advantages of operating without an FDC include—

- Speed in engaging a target.
- Better response to commanders.
- Fewer requirements for personnel and equipment.

8-2. Disadvantages of operating without an FDC include—

- Limited movement capability of the FO.
- Increased vulnerability to direct and indirect fire.
- Difficulty of massing or shifting fires on all targets within the range of the mortar.
- Necessity of locating the mortar position too far forward where it is subject to enemy fire delivered on the friendly frontlines.
- Greater ammunition resupply problems.

FIRING DATA

8-3. The direct-alignment or direct-lay methods can be used to lay the mortar for direction. Initial range can be determined by—

- Estimation using the appearance of objects or 100-meter unit of measure methods.
- Map, photographic map, or aerial photograph.
- Mil-relation formula.

OBSERVER CORRECTIONS

8-4. In direct alignment, the FO makes corrections differently than when operating with an FDC. He makes all his deviation corrections with respect to the GT line rather than with respect to the observer-target (OT) line. All deviation corrections are sent in mils or turns of the traversing handwheel (the FO should consistently use one or the other method and not mix the two).

FORWARD OBSERVER WITHIN 100 METERS OF MORTAR POSITION

8-5. The best FO location for rapid fire adjustment on the mortar is at the mortar position.

8-6. The tactical employment of the mortar usually requires the FO to be in a position other than at the mortar. However, if the FO is located within 100 meters of the mortar position, the deviation error he reads in his binoculars can be applied directly to the sight without computation. This is true because the angle between the observer-burst line and OT line is close to the angle between the mortar-burst line and GT line. The inherent dispersion of the weapon and the bursting area of the round compensate for any slight difference between these two angles.

8-7. For example, if the FO from a position within 100 meters of the mortar location observes the burst to the left of the target and reads that it is 40 mils left on the mil scale of his binoculars, he orders a correction of RIGHT FOUR ZERO. This correction is sent to the mortar in mils and is not converted to meters. The gunner applies this correction directly to the previous deflection setting using the LARS (left add, right subtract) rule.

FORWARD OBSERVER MORE THAN 100 METERS FROM MORTAR POSITION

8-8. The FO cannot always be located within 100 meters of the mortar position.

8-9. When the FO cannot locate within 100 meters of the mortar position, he must be within 100 meters of the GT line (Figure 8-1). If he is not, then making the correct adjustments may be difficult. If the FO was attacking targets over a wide frontage, he would also be required to move often.

8-10. Since the angle that exists between the mortar-burst line and GT line is not equal to the angle that exists between the observer-burst line and OT line, computations must be made to correct these differences. Because the FO is also the FDC, he must use a correction factor to figure the adjustments from the gun and not from himself.

8-11. The correction factor is a fraction, the numerator of which is the OT distance and the denominator is the GT distance (OT distance/GT distance). For example, if the FO is halfway between the mortar and target, the correction to be made on the sight is one-half his deviation spotting; if the mortar is half-way between the FO and the target, the correction is twice his deviation spotting. As other distances give other ratios, a correction factor must be applied to the number of mils spotted before ordering a deflection change. In applying this factor, simplicity and speed are important. The distances used should be to the nearest 100 meters.

EXAMPLE

If the distance from the FO to the target is 1,000 meters, the GT distance is 1,200 meters, and the deviation of the burst from the target, as read by the FO, is 60 mils (Figure 8-1), the correction is—

1,000 ÷ 1,200 = 5/6
5/6 x 60 mils = 50 mils

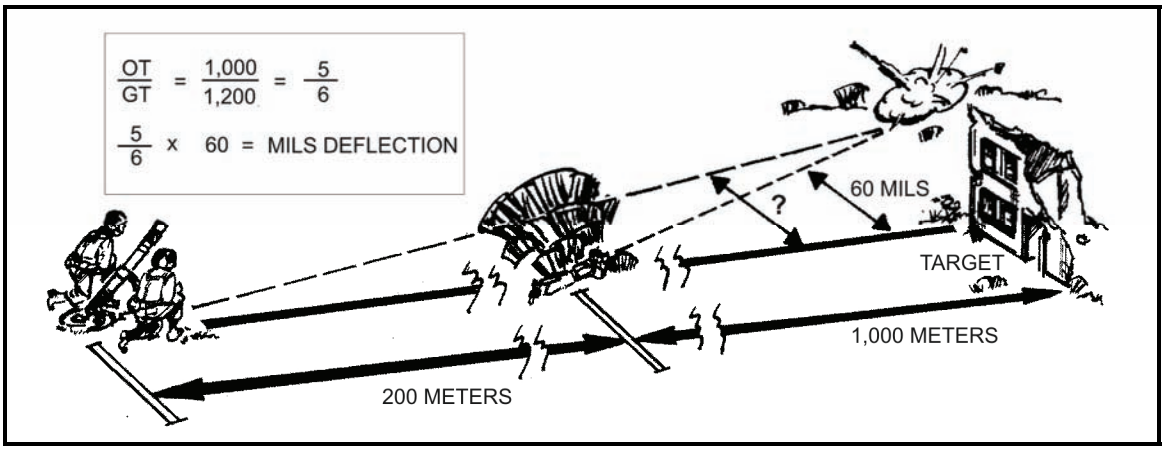

Figure 8-1. Observer more than 100 meters from mortar but within 100 meters of GT line.

INITIAL FIRE COMMANDS

8-12. Initial fire commands contain the necessary data to lay the mortars and fire the first round. The sequence for transmission of the initial fire command is as follows:

- Mortars to follow.
- Type of projectile and fuze.
- Mortars to fire.
- Method of fire.
- Deflection.
- Charge.
- Time setting.
- Elevation.

FIRE COMMANDS

8-13. When mortars are employed without an FDC, fire commands originate with the squad leader at the observation post.

NORMAL FIRE COMMANDS

8-14. The commands used in observed fire procedures without an FDC follow the procedure outlined above with the following exceptions.

Direction

8-15. When operating without an FDC, the FO gives the direction as a shift from a known point (normally the registration point) in the initial fire command. In subsequent commands, he gives the deflection correction from the last round fired. For example, during an adjustment the FO requests moving the next burst right 50 mils. Regardless of the sight setting, his command for deflection is RIGHT FIVE ZERO. The gunner applies the LARS rule to obtain the deflection to be placed on the sight. The sight has a deflection setting of 20 mils; therefore, the gunner subtracts 50 mils from 20 mils and obtains the new sight setting of 3170 mils. Normally, when the registration has been completed, the aiming posts are placed out on a referred deflection.

Elevation (Range)

8-16. The FO may refer to a firing table, determine the charge and elevation (in mils) corresponding to the GT range, and announce this charge and elevation in his fire command. He may, however, announce the range in meters and have the gunner refer to a firing table to determine the charge and elevation.

Gunner's Correction

8-17. The gunner applies the deflection correction to the previous deflection setting, determines the charge and elevation for the given range on the firing table (if required by the FO), announces the charge to the ammunition bearer, sets the elevation on the sight, and then lays for elevation and deflection.

MODIFIED FIRE COMMANDS

8-18. Modified fire commands differ from normal fire commands only in that the deflection and elevation changes in subsequent commands are given as turns of the traversing handwheel and elevating crank. The advantages of modified fire commands are speed and simplicity of execution by the gunner. One turn of the traversing handwheel is equal to about 10 mils of deflection for the 60- and 81-mm and 5 mils for the 120-mm. The unabridged firing tables have a column for the number of turns of the elevation crank to change the range 100 meters.

(1) When using modified fire commands, deflection and elevation changes are computed to the nearest quarter turn. When the FO anticipates using modified fire commands involving turns of the elevating crank, he must announce the range element of the initial fire command as a charge and elevation. This ensures that the FO and gunner are working in the same charge zone, since the number of turns required to move the burst of a round a given distance on the ground can vary considerably between two charge zones.

(2) The gunner lays the mortar for direction and elevation as given in the initial fire command; he does not need to refer to a firing table. Following the initial fire command, the gunner makes no attempt to align the sight on the aiming point or to level the elevation bubble. He makes the corrections by taking the turns given in the subsequent commands and keeping the cross-level bubble centered. If the gunner can no longer traverse in the desired direction, he should be able to align the sight on the aiming point, center the traversing bearing, re-lay on the aiming point, and resume traverse.

(3) In computing the number of turns of the elevation crank between two elevations in mils (taken from the firing table), the FO subtracts the smaller elevation from the larger and divides by 10 (one turn of the elevation crank being equal to about 10 mils of elevation for the 60- and 81-mm mortars) or by 5 (for the 120-mm mortars). In the ladder and bracketing methods of adjustment for range, once the FO has obtained a bracket on the target, he does not need the firing table. He continues the adjustment by halving the number of turns of the elevating crank that established the preceding bracket. In the following example, the first round burst between the FO and target.

EXAMPLE (for a 60- or 81-mm mortar)

MODIFIED FIRE COMMANDS:	RIGHT FOUR TURNS DOWN NINE TURNS LEFT TWO TURNS UP FOUR AND ONE-HALF TURNS RIGHT ONE TURN DOWN TWO TURNS THREE ROUNDS UP ONE TURN
NORMAL FIRE COMMANDS:	RIGHT FOUR ZERO ONE SEVEN ZERO ZERO LEFT TWO ZERO ONE SIX ZERO ZERO RIGHT ONE ZERO ONE SIX FIVE ZERO THREE ROUNDS ONE SIX TWO FIVE

In a different example, assume that the first round was fired at a range of 900 meters and burst beyond the target. The FO wants to DROP ONE ZERO ZERO (100) for the next round and gives a modified fire command in turns of the elevating crank. Using charge 1, the elevation for the first round at 900 meters is 1275 mils. The elevation for a range of 800 meters is 1316 mils. Subtracting 1275 mils from 1316 mils gives a difference in elevation for the two ranges of 41 mils, or 4 turns. Therefore, the subsequent command to fire the second round is UP FOUR TURNS. The second round now bursts short of the target, establishing a bracket. The FO wants to split the bracket and commands, DOWN TWO TURNS, or one-half the number of turns that he previously gave to bracket the target. With this command, the FO is splitting a 100-meter bracket and could specify an FFE if he was engaging a tactical area target.

FIRE CONTROL

8-19. The FO controls the fire from an observation post, issuing fire commands directly to the mortar crew. He may select an observation post close enough to the mortar so that he can give his fire commands orally to the mortar crew. When the observation post is not close to the mortar position, the FO uses a telephone or radio to transmit fire commands.

MOVEMENT TO ALTERNATE AND SUPPLEMENTARY POSITIONS

8-20. When time or the situation dictates, the mortar may be moved to both alternate and supplementary positions, and registered on the registration point, FPF (in the defense), and as many targets as possible.

SQUAD CONDUCT OF FIRE

8-21. Conduct of fire includes all operations in placing effective fire on a target. Examples include: the FO's ability to open and adjust fires, the ability to distribute fire on the target, shifting fire from one target to another, and regulating the type and the amount of ammunition to be expended. Quick actions and teamwork are required to efficiently conduct fires. Training increases the squad's ability to fire without an FDC.

8-22. The normal sequence of instruction begins on the training shell range using practice ammunition, and progresses to field training exercises (FTXs) with practice or combat ammunition. Training ammunition allocation is outlined in DA Pam 350-38, Standards in Training Commission (STRAC).

8-23. To ensure maximum efficiency, each squad member is acquainted with the principles of technique of fire for each type of adjustment and FFE. Frequent rotation of duty helps squad members to better understand this technique of fire. The designated FO (squad member) is trained in all methods and techniques used in bringing effective fire on a target as quickly as possible.

REFERENCE LINE

8-24. The normal method of establishing the initial direction when operating without an FDC is the direct-alignment method. After the initial direction has been established, the FO should conduct a registration on his registration point using only the direction stake as a reference point. After registration is completed, a reference line should be established by placing out aiming posts on a referred deflection, which then becomes the registration point or base deflection.

SQUAD USE OF SMOKE AND ILLUMINATION

8-25. Smoke is used to obscure the enemy's vision for short periods. Illumination is designed to assist friendly forces with light for night operations.

USE OF SMOKE

8-26. The squad leader must be authorized to employ smoke. The authority to fire smoke rests with the battlefield commander that the screen will affect. After careful evaluation of the terrain and weather, the FO locates a point on the ground where he wishes to place the screen. If necessary, the FO adjusts fire to determine the correct location of this point. For a screening mission, splitting a 100-meter bracket is normally sufficient.

USE OF ILLUMINATION

8-27. The battalion commander exercises control over the use of infantry mortar illuminating rounds after coordination with adjacent units through the next higher headquarters. The correct relative position of the flare to the target depends upon the wind and terrain. The point of burst is placed so as to give the most effective illumination on the target and to make sure that the final travel of the flare is not between the FO and target. Adjusting the round directly over the target is not necessary due to the wide area of illumination.

8-28. If there is a strong wind, the point of burst must be placed some distance upwind from the target so the flare drifts to the target location. The flare should be slightly to one flank of the target and at about the same range. When the target is on the forward slope, the flare is placed on the flank and at a slightly shorter range.

8-29. For adjustment on a prominent target, better visibility is obtained by placing the flare beyond the target to silhouette it and to prevent adjustment on the target's shadow. When firing continuous illumination, a strong wind can decrease the time interval between rounds. For maximum illumination, the flare is adjusted to burn out shortly before reaching the ground.

ATTACK OF WIDE TARGETS

8-30. To attack wide targets, the FO must use distributed FFE. In distributed FFE, the gunner fires a specified number of rounds but manipulates the mortar for range or deflection between each round. Distributed fire on wide targets is called *traversing fire.* To place traversing fire on a target, the FO must adjust fire on one end of the target, normally the end nearest to a known point.

(1) After adjustment, the FO determines the width of the target in mils by using the mil scale in the binoculars, or by reading an azimuth to each end and subtracting the smaller from the larger. He then divides the mil width by 10 for the 60- and 81-mm, and 5 for the 120-mm (10 and 5 are the number of mils that one turn of the traversing handwheel moves the mortar). This determines the number of turns needed to traverse across the target (computed to the nearest one-half turn).

(2) In computing the number of rounds, the FO divides the width of the target by the bursting area of the round. He then divides the total number of turns by the number of intervals between the rounds to be fired to determine the number of turns between rounds (computed to the nearest one-half turn). There will always be one less interval than the number of rounds fired in the FFE phase.

(3) After adjustment and before issuing the subsequent fire command, the FO must tell the gunner to prepare to traverse right or left. The gunner traverses the mortar all the way in the direction commanded and then back two turns (four turns on M120/M121) on the traversing handwheel. With the aid of the assistant gunner, the gunner moves the bipod legs until he is approximately re-laid on his direction stake. Using the traversing mechanism, the gunner then completes realigning the mortar and announces, "Up."

(4) When the mortar is laid, the FO issues his subsequent fire command, announcing the number of rounds to be fired and the amount of manipulation between each round.

8-31. In the example in Figure 8-2, the FO is located with the 81-mm mortar squad and measures the width of his target to be 75 mils. Using a map, he estimates the range to be 2,200 meters. Using the mil-relation formula, he determines the width of the target to be 165 meters and decides to attack the target with seven rounds. There will be six intervals between the seven rounds. Since the target is 75 mils wide, he determines the number of turns to be 7 1/2. To determine the number of turns between rounds, he divides the number of turns by the number of intervals (7 1/2 divided by 6 = 1.07). This is rounded off to the nearest one-half turn (one turn).

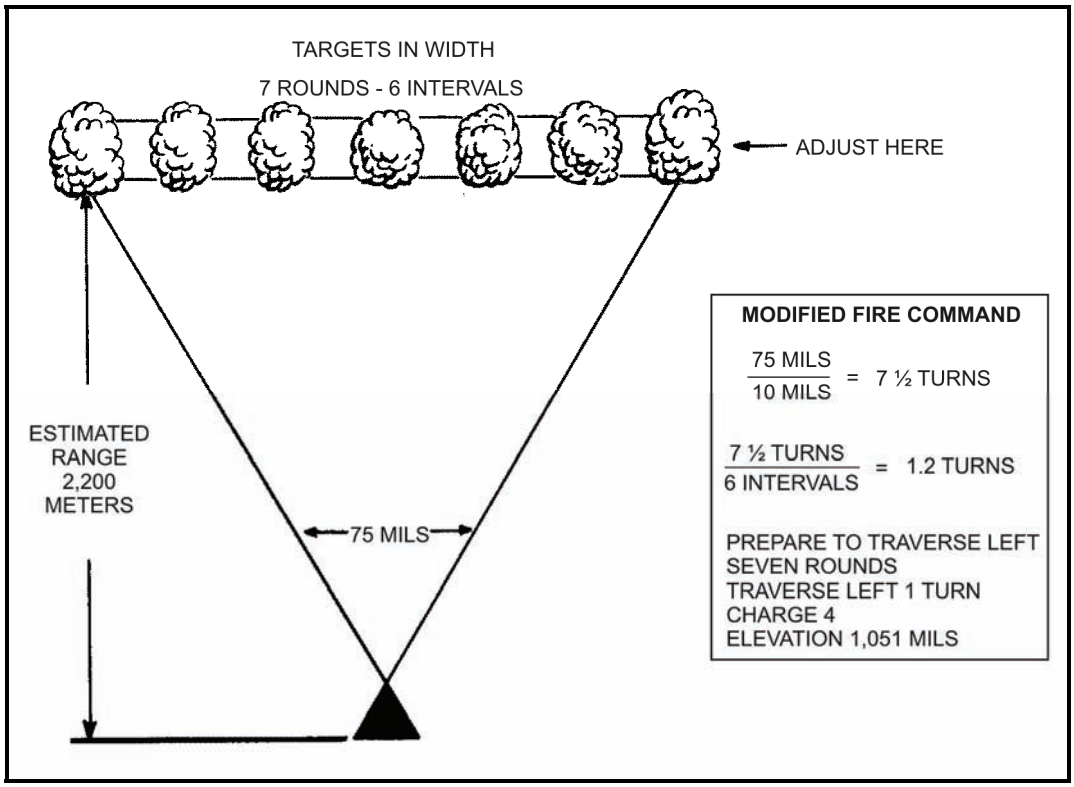

Figure 8-2. Traversing fire.

NOTE: When determining the rounds for FFE, the FO applies the following rules:

1. For the 60- and 81-mm mortars, one round for each 30 meters and four rounds for each 100 meters.
2. For the 120-mm mortar, one round for each 60 meters and two rounds for each 100 meters.

ATTACK OF DEEP TARGETS

8-32. The FO uses searching fire to place effective fire on deep targets. To engage a deep target, the FO must adjust on one end of the target, normally the far end. When the FO anticipates using searching fire, he announces the range as a charge and elevation.

(1) After adjustment is completed on one end of the target, the FO estimates the range to the other end of the target. He can use the firing table to determine the number of turns of the elevating crank needed to change the range 100 meters. If the FO does not have this information, he can decide the number of turns by determining the difference in elevation in mils that exists between the two ranges. He divides this difference by 5 or 10 to determine the number of turns needed on the elevating crank to cover the target.

(2) The FO must then determine the number of rounds to be fired. Usually five rounds cover an area 100 meters deep, except at long ranges where dispersion is greater. Once he has determined the number of rounds to be fired, he determines the number of intervals between rounds. There will *always* be one less interval than the number of rounds fired.

(3) The FO then divides the total number of turns required by the total number of intervals to determine the number of turns the gunner must make between each round (computed to the nearest one-half turn).

EXAMPLE (Adjustment of an 81-mm mortar, Figure 8-3)

If the FO has adjusted to the far end of the target and found it to be 1,000 meters, he estimates the near edge of the target to be 950 meters. By using the firing table, he determines that he must make five turns of the elevating crank to change the range 100 meters. Since the FO only wants to make a 50-meter change, he makes only half of the turns, which is 2 1/2 turns. If he did not have this information, he would determine that there is a 23-mil difference in elevation for the two ranges (elevation 1231 mils for range 1,000 meters, and elevation 1254 mils for range 950) and, by dividing by 10, that it would require two turns of the elevating crank.

The FO has determined that he will use two rounds to attack the target. There will be one interval between the two rounds fired. Then the FO divides the total number of turns required by the number of intervals, and rounds off the answer to the nearest one-half turn.

2 1/2 ÷ 1 (interval) = 2 1/2 turns between rounds

The FO is now ready to send the subsequent fire command to the gunner. The commands are—

TWO ROUNDS
SEARCH UP TWO AND ONE-HALF TURNS
ELEVATION ONE TWO THREE ONE (1231)

The gunner is told to search in the direction that the barrel moves. For this example, the barrel moves from 1231 mils to 1254 mils of elevation; therefore, the command is SEARCH UP.

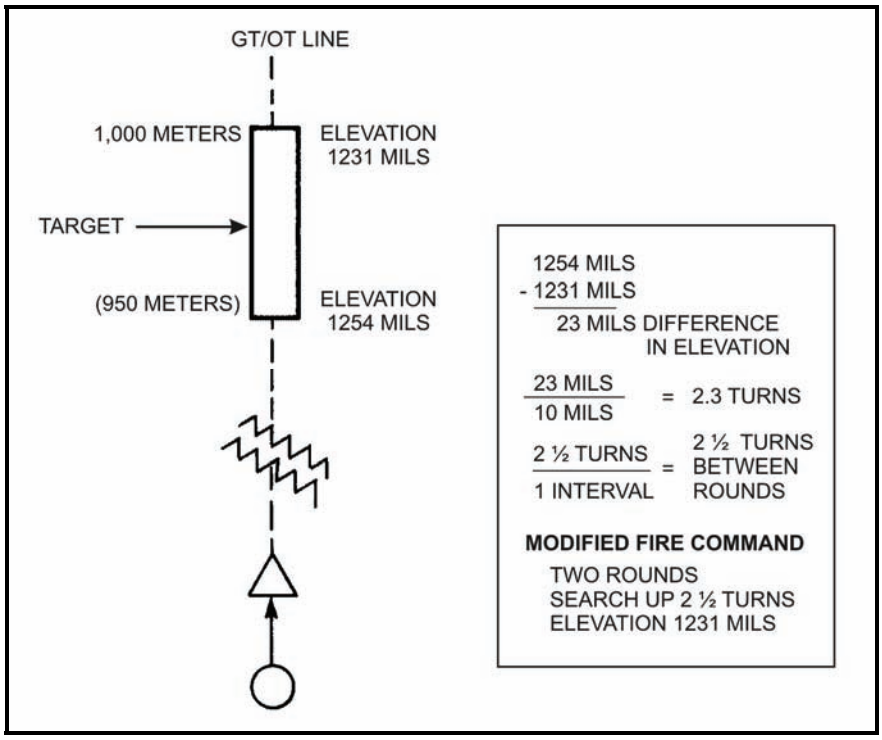

Figure 8-3. Searching fire.

SECTION II. DIRECT-LAY METHOD

In the direct-lay method of emplacing a mortar, the gunner sees the target through the mortar sight. No directional or aiming posts, FO, or FDC are used. The firing table should be used to try to obtain a first-round hit. If the first-round hit is not achieved, the firing table should be used to obtain a bracket. Depending on the location of friendly troops to the target, the bracket method, modified ladder method, or creeping method of adjustment apply.

STEP 1: INITIAL FIRING DATA

8-33. The elevation setting and charge selected should be obtained from a firing table. In the absence of a firing table, they can be determined through unit SOP or by other expedient techniques such as memorizing charge and elevation for 1,000, 2,000, and 3,000 meters; and firing with the charge and elevation setting closest to the estimated target range.

(1) Determine initial range by—

- Estimating.
- Using maps, photographic maps, and so on.
- Intersection.

(2) Place a 3200-mil deflection on the sight, and lay on the center of the target. With the appropriate elevation setting on the sight, center all bubbles by adjusting the lay of the barrel. Take appropriate actions to preclude damage to the sight and, with established charges, fire the first round. Replace the sight, if needed, and observe the burst of the round.

STEP 2: REFERRING THE SIGHT

8-34. Referring the sight centers the vertical line of the sight reticle on the burst.

(1) If the burst is over the target, turn the elevating crank up 4, 8, or 16 turns, depending on the gunner's sensing of the round, range to the target, and other possible factors. If the burst is short, turn the elevating crank down 4, 8, or 16 turns.

(2) Turn the sight elevation micrometer knob to center the elevation bubble. (If the deflection change requires a bipod displacement, the desired range change is maintained.)
(3) Re-lay the barrel on center of target (centering both bubbles by adjusting the barrel. Fire the second round and observe the burst.

NOTE: An alternate method of correction for range is to use the firing table.

STEP 3: BRACKETING THE TARGET

8-35. If the second round is a line shot and brackets the target, changing the elevation of the barrel half the number of turns used in STEP 2 splits the bracket. For example, if in STEP 2 the barrel was cranked up eight turns, now crank down four and fire the third round.

- If the second round is not a line shot but does bracket the target, refer the sight to center of burst and split the bracket by changing the elevation of the barrel half the number of turns used in STEP 2. Change the sight to the center elevation bubble, and then re-lay the barrel on center of target (centering both bubbles by changing the lay of the barrel).
- If the second round is not a line shot and does not bracket the target, repeat STEP 2 until a bracket is obtained.

STEP 4: FIRE FOR EFFECT

8-36. The appropriate actions of STEP 3 are repeated until an effect on the target is seen, then mortars fire for effect.

8-37. After obtaining hits, change the sight to center the elevation bubble and vertical line of the sight reticle on the target, and then record these data. Number the target and retain the number along with appropriate firing data. The mortar can be taken out of action, moved a short distance, and placed back into action with the mortar able to quickly and accurately attack the recorded target or other close targets.

8-38. If the mortar crew is fired upon during any of the above steps, the mortar can be displaced 75 to 100 meters with minimal effect on the fires as long as the elevation setting for the last round fired has been recorded or memorized. Once in the new position, use the recorded/memorized data as a starting point and then complete the interrupted step.

SECTION III. DIRECT-ALIGNMENT METHOD

When the FO/squad leader prepares the initial firing data, he uses the quickest and simplest method available. Initial data consist of a direction of fire and mortar-target range.

MORTAR DISMOUNTED

8-39. If the mortar is dismounted, the squad leader moves to a vantage point where he can see the targets and places out an aiming post. He directs a member of the mortar squad to place out a second aiming post (to be used as a baseplate assembly stake), aligning it with the first aiming post and target. The mortar crew mounts the mortar at the baseplate assembly stake, places 3200 mils deflection on the sight, and traverses the mortar, aligning the sight on the aiming post placed out by the squad leader. The gunner uses this aiming post as an aiming point or he may place out other aiming posts to be used as aiming points.

MORTAR MOUNTED

8-40. If the mortar is mounted, the squad leader moves to a vantage point on a line between the mortar and target. He places out an aiming post (direction stake) on which the gunner lays the mortar with the deflection set at 3200. The gunner uses this aiming post as an aiming point or he may place out other aiming posts to be used as aiming points.

NOTE: The squad leader can also move to a vantage point behind the gun.

NATURAL OBJECT METHOD

8-41. When the tactical situation does not permit alignment of aiming posts and the mortar is rapidly placed into action, the squad leader can establish the mounting azimuth as follows: He selects an object with a clearly defined vertical edge that is situated in the general direction of fire. He directs the gunner to mount and lay the mortar on the edge of this object with the deflection scale set at 3200 mils. By using the aiming point as a reference point, he can place fire on a target to the right and left by determining the angle in mils between the aiming point and target. He directs the gunner to place the corresponding deflection on the mortar using the LARS rule.

SECTION IV. ADJUSTMENT OF RANGE

When firing without an FDC, the normal procedure for the adjustment of range is the establishment of a bracket along the GT line. A bracket is established when one group of rounds falls over and one group of rounds falls short of the adjusting point. The FO must establish the bracket early in the adjustment and then successively decrease the size of the bracket until it is appropriate to enter FFE.

SPOTTINGS

8-42. A spotting is the FO's determination of the location of the burst with respect to the target. Spottings are made for the range and the deviation from the GT line. The FO must be able to visualize the GT line so that he can orient the bursts to it.

RANGE SPOTTINGS

8-43. Definite range spottings are required to make a proper range adjustment. Any range spotting other than DOUBTFUL, LOST, or UNOBSERVED is definite.

Definite Range Spottings

8-44. Definite range spottings may include—

- A burst or group of bursts on or near the GT line.
- A burst(s) not on the GT line but located by the FO using his knowledge of the terrain or drifting smoke, shadows and wind patterns. Use of these spottings requires caution and good judgment.
- The location of the burst fragmentation pattern on the ground.
- A burst that appears beyond the adjusting point (over).
- A burst that appears between the FO and adjusting point (short).
- A round that bursts within the target area (target).
- A burst or center of a group of bursts that is at the proper range (range correct).

Doubtful, Lost, or Unobserved Range Spottings

8-45. Range spottings that are doubtful, lost, or unobserved usually cannot be used for adjustments and a bold shift in deviation or range should be made for the next round. These range spottings include—

- ***Doubtful***. A burst that can be observed but cannot be determined as over, short, target, or range correct.
- ***Lost***. A burst whose location cannot be determined by sight or sound.
- ***Unobserved***. A burst not observed but known to have impacted (usually heard).
- ***Unobserved Over or Short***. A burst not observed but known to be over or short. This spotting provides some information to assist the FO in the subsequent adjustment.

DEVIATION SPOTTINGS

8-46. A deviation spotting is the angular measurement from the target to the burst. There are three possible deviation spottings:

- ***Line***. A round that impacts on the GT line
- ***Left***. A round that impacts to the left of the GT line.
- ***Right***. A round that impacts to the right of the GT line.

ERRATIC SPOTTINGS

8-47. A round that varies greatly from normal behavior is classified as an erratic round.

BRACKETING METHOD

8-48. When the first definite range spotting is obtained, the FO should make a range correction that is expected to result in a range spotting in the opposite direction—for example, if the first definite range spotting is SHORT, the FO should add enough to get an OVER with the next round. The inexperienced FO should use the guide in Table 8-1 to determine the initial range change needed to establish a bracket (Figure 8-4).

Table 8-1. Initial range change.

OT DISTANCE	MINIMUM RANGE CHANGE (ADD or DROP)
Up to 999 meters	100 meters
Over 1,000 to 1,999 meters	200 meters
2,000 meters and over	400 meters

8-49. Once a bracket has been established, it is successively decreased by splitting it in half until it is appropriate to enter FFE. FFE is usually requested in area fire when a 100-meter bracket is split.

8-50. The FO must use his knowledge and experience in determining the size of the initial and subsequent range changes. For example, if the FO adds 800 after an initial range spotting of SHORT and the second range spotting is OVER but the bursts are much closer to the target than the initial rounds, a range change of DROP 200 would be appropriate.

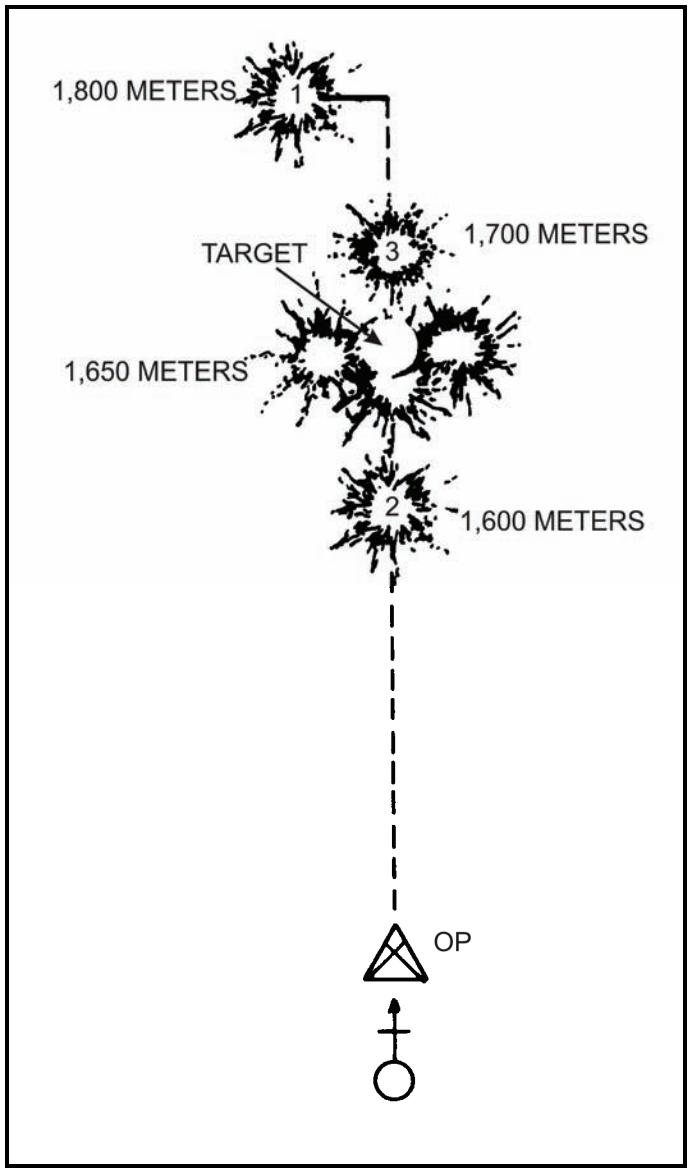

Figure 8-4. Bracketing method.

CREEPING METHOD OF ADJUSTMENT

8-51. When a danger close mission is requested, the creeping method of adjustment is used. When the FO requests an adjustment on a target that is within 400 meters of friendly troops, he adds a 200-meter safety factor to ensure that the first round does not fall short. When the initial round is spotted, he estimates the overage in meters. He then makes the correction for range by dropping half of the estimated overage. Once he has given a correction in turns equivalent to a drop in range of 50 meters, OR in the nearest number of half turns equivalent to 50 meters, he continues this same adjustment until he has a RANGE CORRECT, a TARGET, or a SHORT spotting. If, during the adjustment, a round falls short of the target, the FO continues the adjustment using the bracket method of adjustment.

LADDER METHOD OF ADJUSTMENT

8-52. Since surprise is an important factor in placing effective fire on a target, any form of adjustment that reduces the time interval between the burst of the first round for adjustment and FFE is useful. The

ladder method of adjustment, a modification of the bracketing method, reduces the time interval and permits FFE to be delivered more rapidly. The ladder method may also be used by the FO when firing with an FDC (Figure 8-5). In the following example, the FO is located within 100 meters of the mortar position.

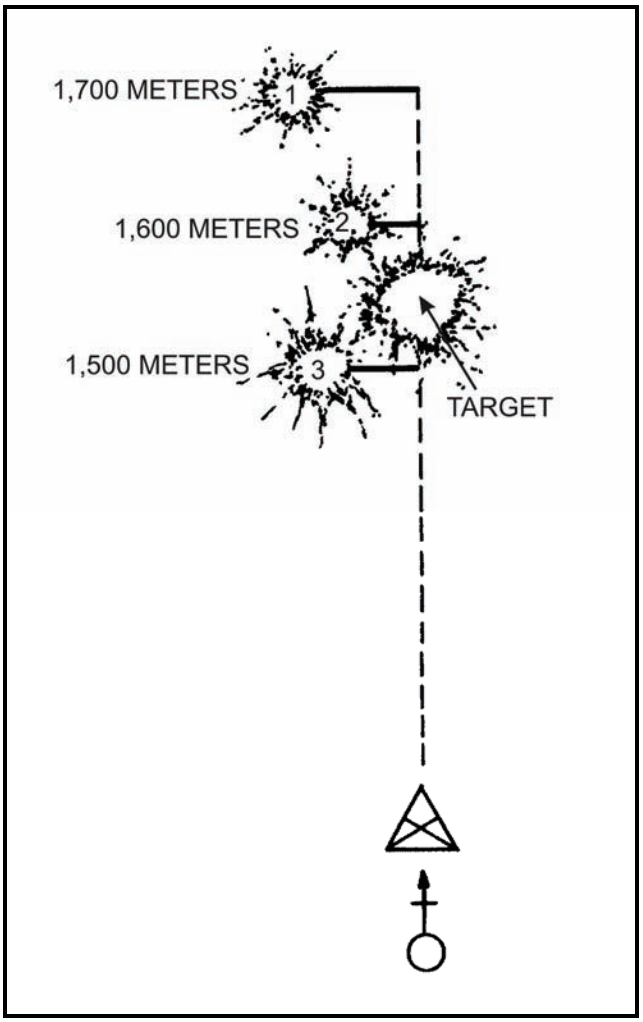

Figure 8-5. Ladder method of fire adjustment.

EXAMPLE (Ladder method of adjustment, Figure 8-5)

The FO measures the deviation of a target from the registration point as right 30 mils. He estimates the GT range to be 1,600 meters. The size of the ladder is based on the minimum range change guide. To obtain a 200-meter ladder, the FO adds 100 meters to this estimated range to establish one range limit for the ladder and subtracts 100 meters from the estimated range to establish the other limit. This should result in a ladder that straddles the target. Three rounds are fired in this sequence: far, middle, and near at 10-second intervals. This helps the FO make a spotting, since no burst is obscured by the dust and smoke from a preceding burst. The FO checks his firing table to obtain the lowest charge and elevation for the far range, 1,700 meters (1098); the middle range, 1,600 meters (1140); and the near range, 1,500 meters (1178) and issues the following initial fire command:

NUMBER ONE
HE QUICK
CHARGE 1
THREE ROUNDS IN EFFECT
100-METER LADDER
FROM REGISTRATION POINT, RIGHT THREE ZERO (30)
ONE ROUND, ELEVATION, ONE ZERO NINER EIGHT (1098)
ONE ROUND, ELEVATION, ONE ONE FOUR ZERO (1140)
ONE ROUND, ELEVATION, ONE ONE SEVEN EIGHT (1178)

The method-of-fire element in the normal initial fire command for the ladder contains the word “ladder.” The word “ladder” tells the gunner that three rounds will be fired as follows: the first at the elevation announced (far range), the second at the announced middle elevation (target range), and the third at the last announced elevation (near range). The gunner indexes his sight for deflection at the base deflection minus 30, while the ammunition bearer prepares the rounds with the designated charge.

The average deviation of all three rounds is left 30 mils. The target is bracketed between the second and third bursts. The squad leader now has a 100-meter bracket of the target between 1,500 and 1,600 meters, and is ready to FFE. He issues the following subsequent fire command:

THREE ROUNDS
RIGHT THREE TURNS
ELEVATION, ONE ONE SIX ZERO (1160)

ESTABLISHMENT OF A REFERENCE LINE AND SHIFTING FROM THAT LINE

8-53. The normal method of establishing initial direction when operating without an FDC is the direct-alignment method. After initial direction has been established, the FO should conduct a registration using only the direction stake. After he completes this registration, he establishes the GT line as a reference line. This is accomplished by referring the sight to the desired deflection (usually 3200 or 2800 mils) and then realigning the direction stake on this deflection. The following is an example of the FO located within 100 meters of the mortar position.

EXAMPLE (Establishment of a Reference Line, Figure 8-6)

A FO has adjusted the fire of his squad on a target. A reference line has been established at 3200 mils on the azimuth scale. The FO observes another target and decides to adjust onto it. He estimates the GT range to be 1,200 meters, determines with his binoculars that the target is 60 mils to the right of the first target or registration point, and issues an initial fire command:

NUMBER ONE
HE QUICK
ONE ROUND
THREE ROUNDS IN EFFECT
SHIFT FROM RP1, RIGHT FIVE ZERO (50)
RANGE ONE TWO ZERO ZERO (1200)

The gunner sets his sight with a deflection of 3200 mils and applies the LARS rule (50 mils subtracted from 3200 mils equals a deflection of 3150). Looking at the firing table for HE M821 ammunition, he finds the charge to be 1 at elevation 1278. He announces the charge to the ammunition bearer and, at the same time, places the elevation on the sight. He lays the mortar and commands, FIRE.

The FO spots the first round burst as over the target and 25 mils to the left. The squad leader issues a subsequent fire command correcting the deflection and, using the minimum range change guide (Table 8-1), decreasing the range 200 meters between himself and the target. In doing so, the FO establishes a bracket. He then commands, RIGHT TWO ZERO (20), RANGE ONE ZERO ZERO ZERO (1000).

The second round bursts between the FO and target and on the GT line. The deflection is now correct, and a 200-meter bracket has been established. The squad leader's subsequent fire command is RANGE, ONE ONE ZERO ZERO (1100). The gunner selects the charge and elevation from his firing table, announces the charge to the ammunition bearer, and when all is ready he commands, FIRE.

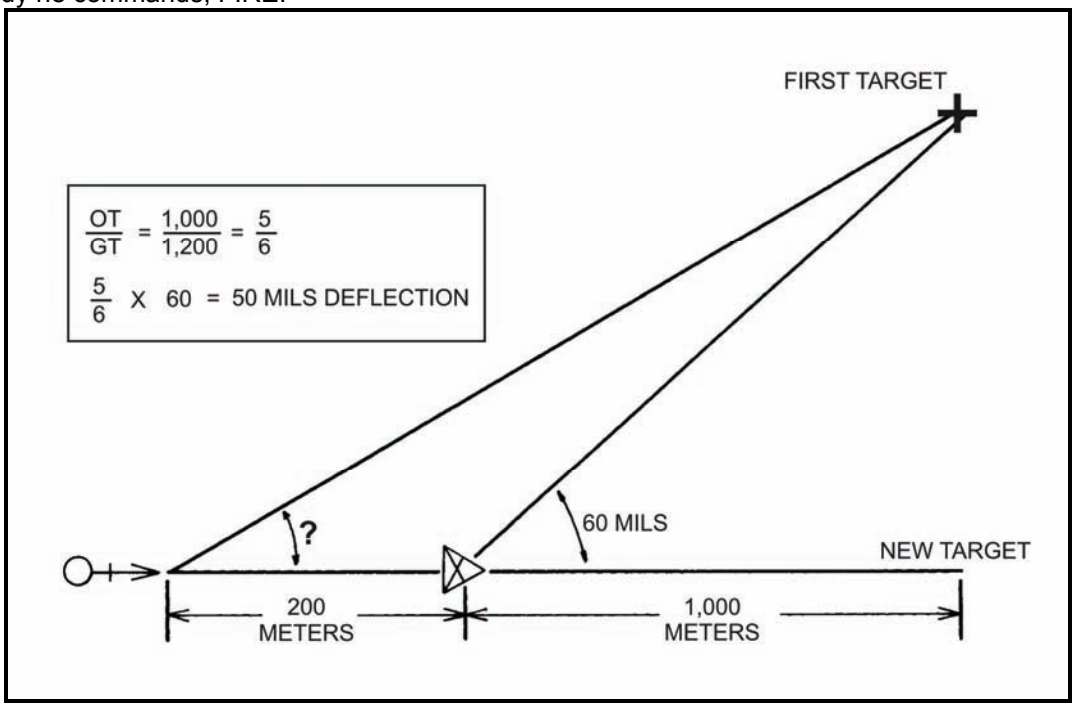

Figure 8-6. Adjusting fire onto a new target with the observer within 100 meters of the GT line.

This third round bursts beyond the target and on the GT line. A 100-meter range bracket has now been established. In his next fire command, the squad leader combines the adjustment with FFE:

THREE ROUNDS
RANGE, ONE ZERO FIVE ZERO (1050)

The bursting area of these rounds and their normal dispersion cover the target area with casualty-producing fragments. If the FFE fails to cover the target adequately, the squad leader makes any necessary changes in deflection or range and again orders FFE. This adjustment can also be fired using modified fire commands. The initial fire command for this mission would then be:

NUMBER ONE
HE QUICK
ONE ROUND IN ADJUST
THREE ROUNDS IN EFFECT
FROM RP
RIGHT FIVE ZERO (50)
CHARGE 1
ELEVATION ONE TWO SEVEN EIGHT (1278)

This page intentionally left blank.

Chapter 9

Gunner's Examination

The gunner's examination tests the proficiency of the gunner in five areas: mounting the mortar, making small deflection change, referring the sight and realigning aiming posts, making large deflection and elevation changes, and reciprocally laying the mortar. It is also a test of the three qualified assistants the candidate is allowed to choose. The candidate's success in the examination depends mainly on his ability to work harmoniously with these assistants. The examining board must consider this factor and ensure uniformity during the test. Units should administer the gunner's examination at least semiannually to certify crew proficiency.

SECTION I. PREPARATION

Preparation for the gunner's examination teaches the Soldier how to properly and accurately perform the gunner's duties. The squad leader is responsible for this preparation. In table of organization and equipment (TOE) units, squad members should be rotated within the squad so that each member can become proficient in all squad positions. Individual test scores should be maintained and consolidated to determine each squad's score. These squad scores can then be compared to build esprit de corps.

METHODS OF INSTRUCTION

9-1. The conditions and requirements of each step of the qualification course are explained and demonstrated. Then each candidate is given practical work and is constantly supervised by his squad leader to ensure accuracy and speed—accuracy is stressed from the start; speed is attained through repetition. The platoon leader/platoon sergeant monitors the instruction given by the squad leaders within the platoon. Demonstrations are usually given to the entire group. Squads also perform practical work under the supervision of the squad leader.

PRIOR TRAINING

9-2. A Soldier must be proficient in mechanical training, crew drill, and fire commands and their execution before he qualifies to take the examination.

PREPARATORY EXERCISES

9-3. The preparatory exercises for the gunner's examination consist of training in those steps found in the qualification course. After sufficient preparatory exercises, candidates are given the gunner's examination. Those failing the examination should be retrained for testing at a later date.

EXAMINING BOARD

9-4. The examining board consists of one officer and two senior NCOs who are proficient with the weapon. No more than one member is selected from the candidate's organization. (The commander who has authority to issue special orders appoints the board.) Scores are recorded on DA Form 5964-R, (Figure 9-1). A blank copy of this form is located in the back of this publication for local reproduction on 8 1/2- by 11-inch paper.

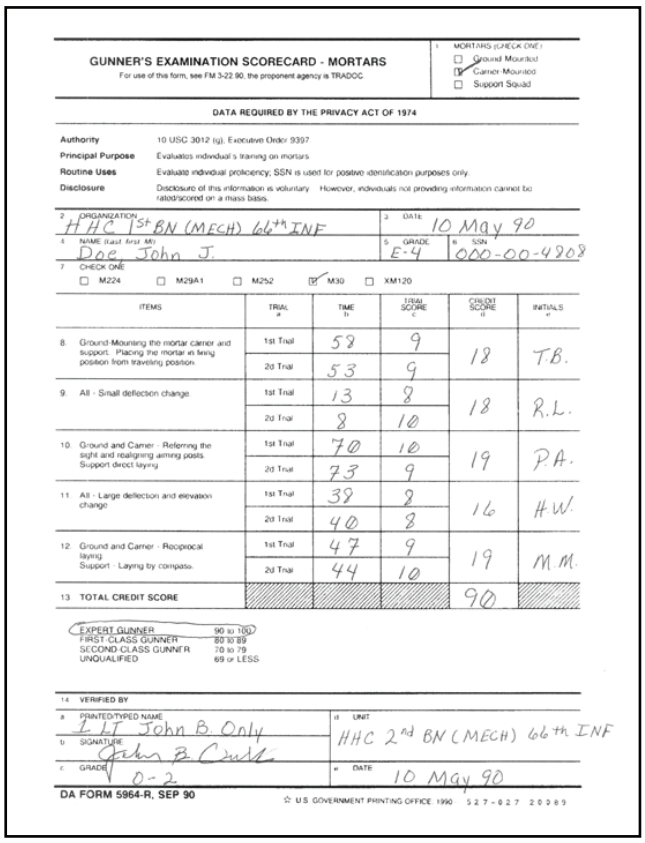

GUNNER'S EXAMINATION SCORECARD - MORTARS
For use of this form, see FM 3-22.90; the proponent agency is TRADOC

1. MORTARS (CHECK ONE)
☐ Ground Mounted
☑ Carrier Mounted
☐ Support Squad

DATA REQUIRED BY THE PRIVACY ACT OF 1974

Authority	10 USC 3012 (g), Executive Order 9397
Principal Purpose	Evaluates individual's training on mortars
Routine Uses	Evaluate individual proficiency; SSN is used for positive identification purposes only.
Disclosure	Disclosure of this information is voluntary. However, individuals not providing information cannot be rated/scored on a mass basis.

2. ORGANIZATION: HHC 1st BN (MECH) 66th INF
3. DATE: 10 May 90
4. NAME (Last, first, MI): Doe, John J.
5. GRADE: E-4
6. SSN: 000-00-4908
7. CHECK ONE
☐ M224 ☐ M29A1 ☐ M252 ☑ M30 ☐ XM120

ITEMS	TRIAL a	TIME b	TRIAL SCORE c	CREDIT SCORE d	INITIALS e
8. Ground-Mounting the mortar carrier and support. Placing the mortar in firing position from traveling position.	1st Trial	58	9	18	T.B.
	2d Trial	53	9		
9. All - Small deflection change.	1st Trial	13	8	18	R.L.
	2d Trial	8	10		
10. Ground and Carrier - Referring the sight and realigning aiming posts. Support direct laying.	1st Trial	70	10	19	P.A.
	2d Trial	73	9		
11. All - Large deflection and elevation change.	1st Trial	38	8	16	H.W.
	2d Trial	40	8		
12. Ground and Carrier - Reciprocal laying. Support - Laying by compass.	1st Trial	47	9	19	M.M.
	2d Trial	44	10		
13. TOTAL CREDIT SCORE				90	

(EXPERT GUNNER 90 to 100)
FIRST-CLASS GUNNER 80 to 89
SECOND-CLASS GUNNER 70 to 79
UNQUALIFIED 69 or LESS

14. VERIFIED BY
a. PRINTED/TYPED NAME: 1 LT John B. Only
b. SIGNATURE: John B. Only
c. GRADE: O-2
d. UNIT: HHC 2nd BN (MECH) 66th INF
e. DATE: 10 May 90

DA FORM 5964-R, SEP 90
☆ U.S. GOVERNMENT PRINTING OFFICE: 1990 527-027 20089

Figure 9-1. Example of completed DA Form 5964-R.

LOCATION AND DATE

9-5. Each unit armed with a mortar weapon system gives examinations semiannually. Other units may conduct examinations or allow their eligible members to take the qualification tests at nearby stations. (The commander authorized to issue special orders determines the date of the examination.) The area selected should be on flat terrain consisting of soil that allows for aiming posts to be easily positioned at 50 and 100 meters from the station position.

ELIGIBLE PERSONNEL

9-6. The following personnel are eligible to take the examination:

- Commissioned officers, NCOs, and enlisted men assigned to a mortar unit.
- Commissioned officers, NCOs, and enlisted men whose duties require them to maintain proficiency in the use of mortars, as determined by battalion and higher commanders.

QUALIFICATION SCORES

9-7. A candidate's earlier qualification ends when he is administered a record course with the mortar. He is classified according to his latest examination score as follows:

- Expert gunner 90 - 100
- First-class gunner 80 - 89
- Second-class gunner 70 - 79
- Unqualified 69 or less

GENERAL RULES

9-8. Conditions should be the same for all candidates during the test. The examining board ensures that information obtained by a candidate during testing is not passed to another candidate, and that candidates do not receive sight settings or laying of mortars left by a previous candidate.

9-9. Unit equipment should be used in the examination; however, it should be the best available. Sight settings are considered correct when any part of the index coincides with any part of the line of graduation of the required setting.

9-10. The left side of the aiming post is used for alignment. The elevation and cross-level bubbles are considered centered when the bubbles are resting entirely within the outer etched lines on the vials.

9-11. The candidate is permitted to traverse the mortar to the middle point of traverse before each trial at laying the mortar, except at Station No. 5.

9-12. In any test that calls for mounting or emplacing the mortar, either by the candidate or the board, the surface emplacement is used. Digging is not allowed, and the rear of the baseplate assembly is not staked.

9-13. In time trials, the candidate does not receive credit for the trial if he performs any part of it after announcing, "Up."

9-14. The candidate selects his assistants from within his squad to participate in the test. When squad members are unavailable for testing, the candidate may select his assistants from outside the squad but from within his organization. The board makes sure that no unauthorized assistance is given the candidate during the examination.

9-15. A candidate is given three trials—one for practice and two for record. If he takes the first trial for record, then he must take the second trial for record even if he fails it. His credit score is the total of the two record trials. When he fails in any trial through the fault of an examiner, defective sight, mortar, mount, or other instrument used, that trial is void and the candidate is given another trial as soon as possible. If his actions cause the mortar to function unsatisfactorily during testing, he receives no credit for that portion of the test.

9-16. When a mechanical failure occurs and a mortar fails to maintain the lay after the candidate announces, "Up," a board member twists or pushes the mortar (taking up the play without manipulation) until the cross-level bubble is within the two outer etched lines. He then looks through the sight and, if the vertical line is within two mils of the correct sight picture, the candidate is given credit for that trial, as long as other conditions are met.

9-17. The candidate must repeat all commands. Commands should be varied between trials, using even and odd numbers, and right and left deflections.

SECTION II. GUNNER'S EXAMINATION WITH THE GROUND-MOUNTED MORTAR

This examination tests the gunner's ability to perform basic mortar gunnery tasks with the ground-mounted mortar system.

SUBJECTS AND CREDITS

9-18. The examination consists of the following tests with maximum credit scores as shown.

Mounting the mortar	20 points
Small deflection change	20 points
Referring the sight and realigning aiming posts	20 points
Large deflection and elevation changes	20 points
Reciprocal laying	20 points

EQUIPMENT

9-19. The recommended equipment needed for the five stations includes five mortars, five sights, one aiming circle, eight aiming posts, and five stopwatches.

ORGANIZATION

9-20. The organization prescribed in Table 9-1 is recommended for the conduct of the gunner's examination. Variations are authorized, depending on local conditions and the number of Soldiers being tested.

PROCEDURE

9-21. The candidate carries his scorecard (Figure 9-1) from station to station. The evaluator at each station fills in the time, trial scores, and credit score, and initials the appropriate spaces.

Table 9-1. Organization for conducting gunner's examination (ground-mounted).

STATION	PHASE	EQUIPMENT	
		FOR CANDIDATE	FOR EXAMINING OFFICER
1	Mounting the mortar.	1 mortar 1 sight 1 baseplate stake	1 stopwatch
2	Small deflection change.	1 mortar 1 sight 2 aiming posts	1 stopwatch
3	Referring the sight.	1 mortar 1 sight 2 aiming posts	1 stopwatch
4	Large deflection and elevation change.	1 mortar 1 sight 2 aiming posts	1 stopwatch
5	Reciprocal laying.	1 mortar 1 sight 2 aiming posts	1 stopwatch 1 aiming circle

MOUNTING OF THE MORTAR

9-22. The candidate is tested at Station No. 1 on his ability to perform the gunner's duties in mounting the mortar.

EQUIPMENT

9-23. Prescribed in Table 9-1.

CONDITIONS

9-24. The candidate is directed to mount the mortar with his authorized assistants. The conditions of the test are as follows:

All Mortars

9-25. The candidate arranges his equipment as outlined in Figures 9-2 through 9-4. The emplacement is marked before the examination.

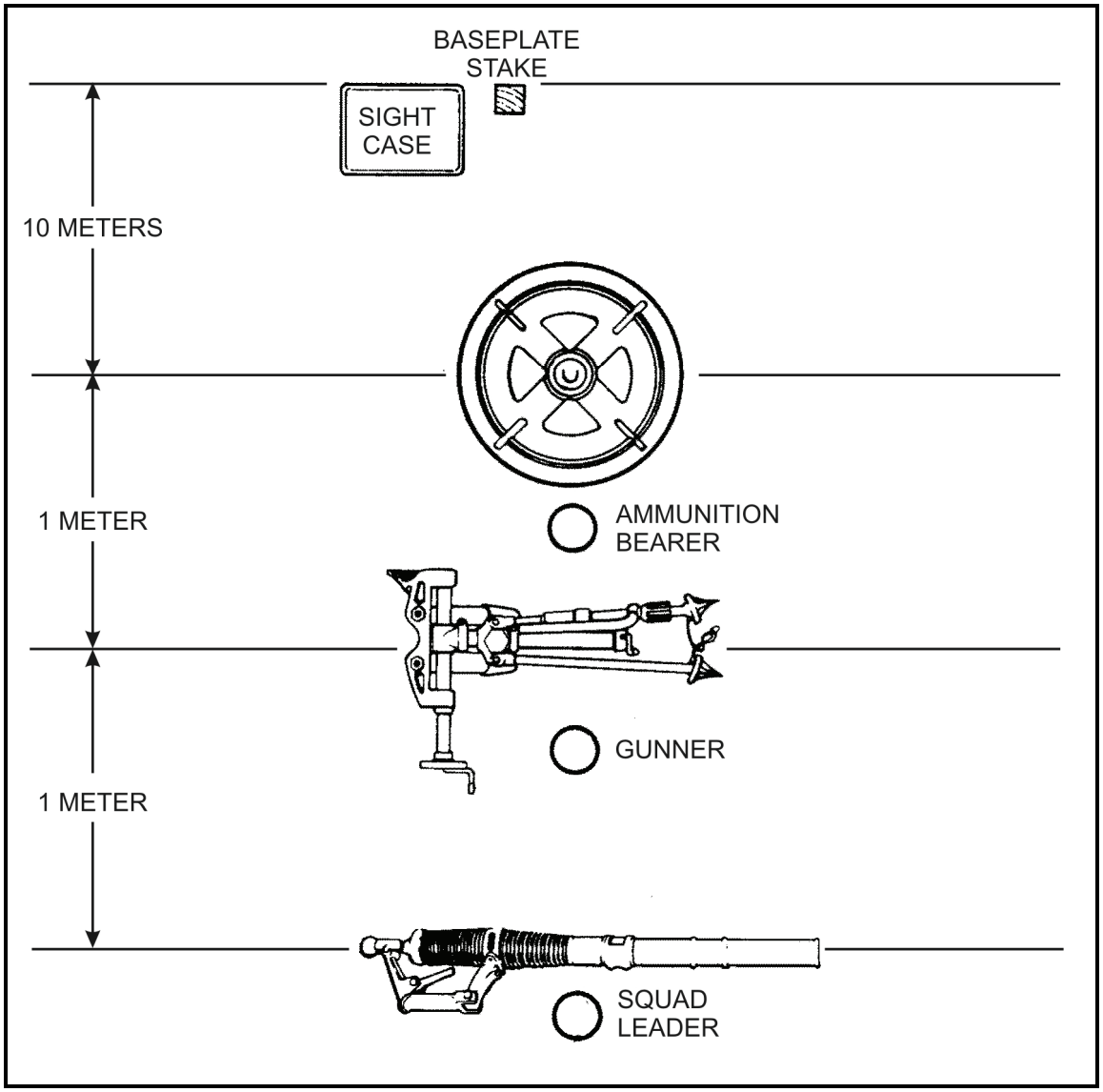

Figure 9-2. Diagram of equipment layout and position of personnel for the gunner's examination (60-mm mortar).

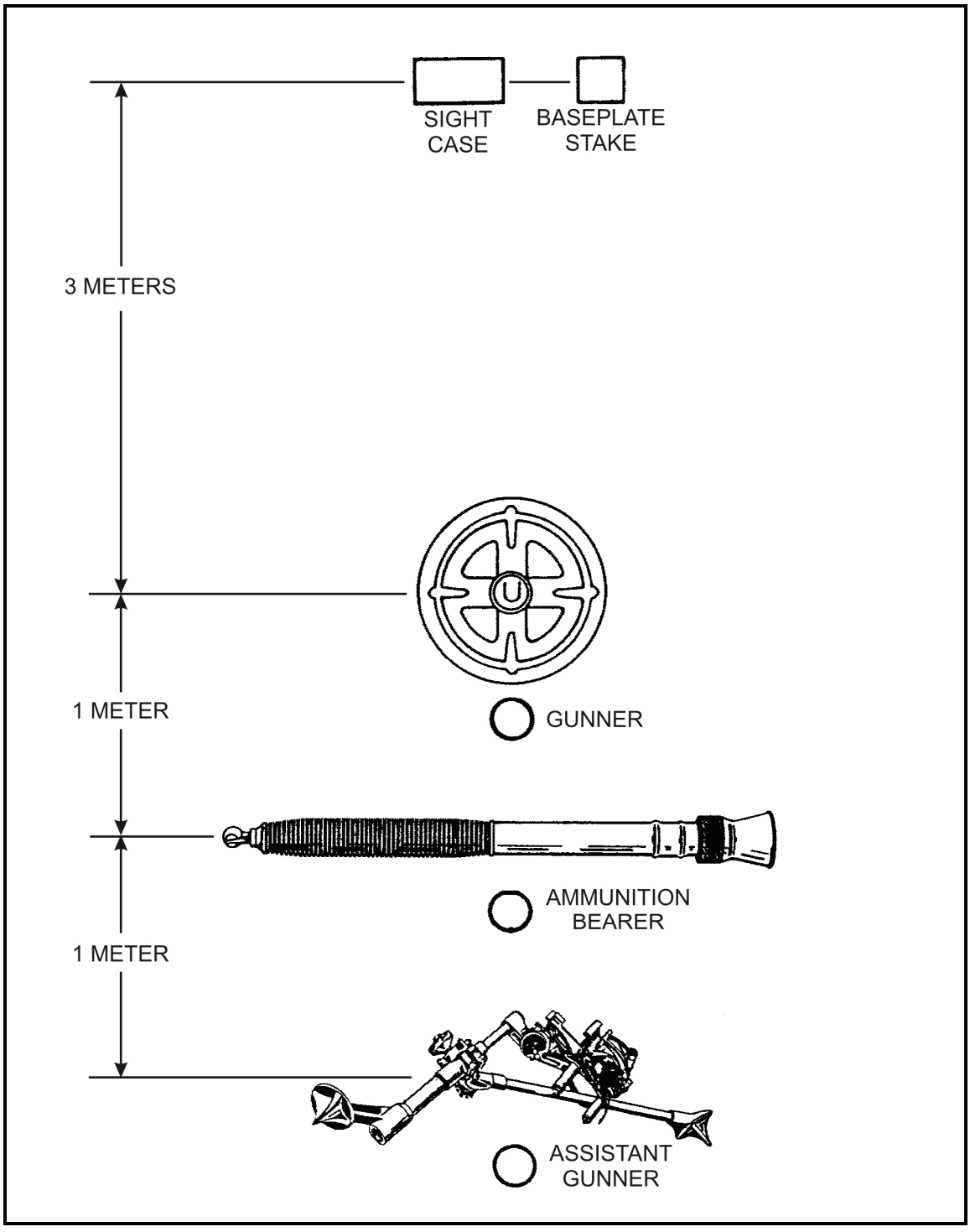

Figure 9-3. Diagram of equipment layout and position of personnel for the gunner's examination (81-mm mortar, M252).

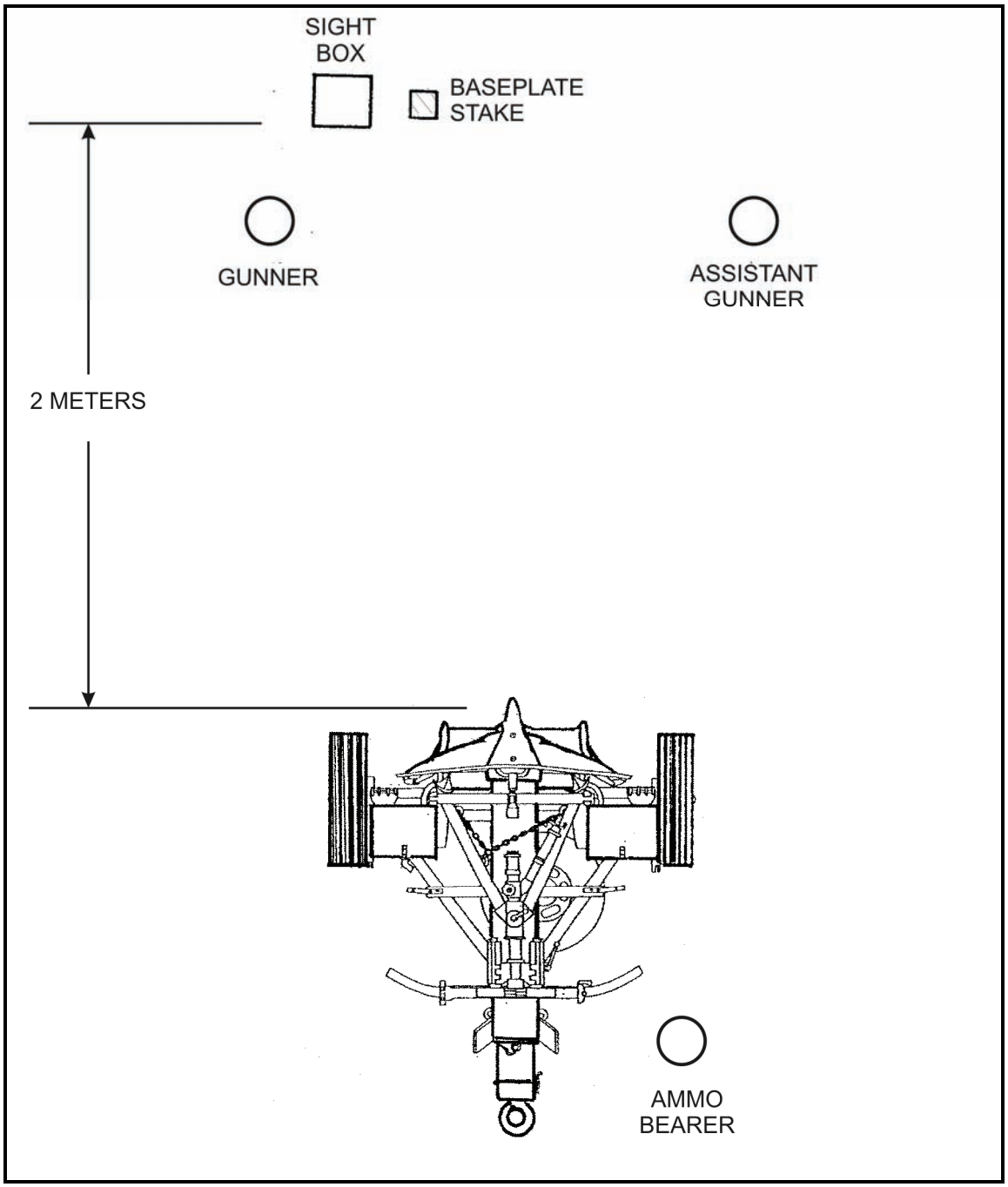

Figure 9-4. Diagram of equipment layout and position of personnel for the gunner's examination (120-mm mortar).

9-26. The mortar sight is seated in its case with 3800 mils set on the deflection scale and 1100 mils set on the elevation scale, and the sight box is closed and latched.

120-mm Only

9-27. Traverse extension is locked and centered.

PROCEDURE

9-28. The candidate is given three trials. If he chooses to use the first (practice) as record, he must use the second as record. If he chooses to use the first trial as practice, he must use the second and third trials as record. His credit score for the test is the total of the two record trials.

(1) The candidate and his assistants take their positions. The candidate is instructed to mount the mortar at 3200 mils deflection and 1100 mils elevation.

(2) The evaluator points to the exact spot where the mortar is to be mounted. He indicates the initial direction of fire by pointing in that direction and gives the command ACTION, at which time the candidate begins mounting the mortar. After mounting the mortar, he should have 3200 mils deflection 1100 mils elevation.

(3) The assistants may manipulate the sight mount knob/cross-level handwheel and elevation hand crank. They may center the connection for the mortar locking pin assembly, but they MUST NOT manipulate the sight for deflection or elevation settings. After the sight is mounted, only the gunner may manipulate the elevation cross-level handwheel/ hand crank for deflection or elevation settings.

(4) When the test is completed, the candidate announces, "Up." Time is charged against him from the command ACTION to the announcement "Up."

SCORING

9-29. Scoring procedures are as follows:

(1) The candidate receives no credit when the—

- Time exceeds 1 minute and 15 seconds for the 120-mm or 90 seconds for all other mortars.
- Sight is not set correctly for deflection and elevation.
- Cross-level and elevation bubbles are not centered.
- Mortar locking pin, or the clevis lock pin is not fully locked.
- Connection for the mortar locking pin assembly (buffer carrier, 60-mm mortar) or the traversing slide assembly is off center more than two turns.
- Assistant manipulates the sight for a deflection or elevation setting.
- Baseplate is not positioned correctly in relation to the baseplate stake.
- Selector switch on the barrel is not on D for drop-fire (60-mm mortar only).
- Collar assembly is not positioned on the lower saddle (60-mm mortar only).
- Firing pin recess is not facing upwards on the barrel (81-mm mortar, M252 only).
- Traverse is more than four turns (120-mm only).
- Barrel clamp is not locked (120-mm only).
- Cross-level lock is not tight (120-mm only).
- Leg-locking handwheel is not wrist-tight (81-mm mortar, M252 only).
- Coarse cross-level nut is not wrist-tight (60-mm mortar only).
- Collar locking knob is not secured (hand-tight) to the barrel (60-mm and 81-mm mortars only).
- Bipod legs are not fully extended and the spread cable or chain is not taut (60-mm and 120-mm mortars only).

(2) When the mortar is correctly mounted within the prescribed limits, credit is given as follows:

Time (Seconds)		Point Credit for Each Trial
120-mm	60-/81-mm	
51 or less	65 or less	10
52 to 57	66 to 70	9
58 to 63	71 to 75	8
64 to 69	76 to 80	7
70 to 75	81 to 85	6
	86 to 90	5
76 or over	91 or over	0

SMALL DEFLECTION CHANGE

9-30. The candidate is tested at Station No. 2 on his ability to perform the gunner's duties when he is given commands that require a change in deflection.

EQUIPMENT

9-31. Prescribed in Table 9-1.

CONDITIONS

9-32. A mortar is mounted with the sight installed. The sight is laid on two aiming posts (placed out 50 to 100 meters from the mortar) on a referred deflection of 2800 mils and 1100 mils elevation. The mortar is center of traverse, and the vertical line of sight is on the left edge of both aiming posts.

(1) The candidate is allowed to check the deflection set on the sight before each trial.

(2) He is allowed to start each trial with his hand on the deflection knob

(3) The change in deflection does not involve movement of the bipod assembly but causes the candidate to traverse the mortar at least 20 mils and not more than 60 mils

(4) Traversing extension is locked and centered (120-mm).

PROCEDURE

9-33. The candidate is given three trials. If he chooses to use the first (practice) as record, he must use the second as record. If he chooses to use the first trial as practice, he must use the second and third trials as record. His credit score for the test is the total of the two record trials.

(1) The candidate is given one assistant. A different command is given for each trial. The evaluator records the time and checks the candidate's work after each command has been executed.

(2) The evaluator announces an initial command requiring a change in deflection of 20 to 60 mils and an elevation change of 35 to 90 mils. The candidate may proceed with the exercise as soon as the deflection element is announced. The evaluator announces the command in normal sequence and cadence.

(3) No manipulation by the assistant is allowed.

(4) Time is charged against the candidate from the announcement of the last digit of the elevation element until the candidate announces, "Up."

SCORING

9-34. Scoring procedures are as follows:

(1) The candidate receives no credit when the—

- Time is 36 seconds or greater.
- Sight is not set correctly for deflection or elevation.
- Elevation bubble is not centered.
- Cross-level bubble is not centered.
- Assistant manipulates the mortar or sight for elevation or deflection.
- Vertical cross line of the sight is more than 2 mils off the correct sight picture.

(2) When the mortar is laid correctly within the prescribed limits, credit is given as follows:

Time (Seconds) All Mortars	Point Credit for Each Trial
20 or less	10
21 to 23	9
24 to 26	8
27 to 31	7
32 to 35	6
36 or over	0

REFERRING OF THE SIGHT AND REALIGNMENT OF AIMING POSTS

9-35. The candidate is tested at Station No. 3 on his ability to perform the gunner's duties in referring the sight and realigning the aiming posts.

EQUIPMENT

9-36. Prescribed in Table 9-1.

CONDITIONS

9-37. The mortar is mounted with the correct sight installed. The sight is laid on two aiming posts (placed out 50 and 100 meters from the mortar) on a referred deflection of 2800 mils and 1100 mils elevation.

(1) The mortar is within two turns of center of traverse (four turns for the 120-mm). The candidate receives an administrative command with a deflection of 2860 or 2740 mils. The mortar is then re-laid on the aiming posts using the traversing crank.

(2) The candidate checks the conditions before each trial and is allowed to start the test with his hand on the deflection knob of the sight.

(3) The change in deflection in the command must be less than 25 mils but greater than 5 mils. The elevation remains constant at 1100 mils.

(4) The candidate is allowed two assistants—one to place out aiming posts and one to move the bipod (mount). The assistants do not manipulate the sight or mortar for elevation or deflection.

(5) Traverse extension will not be used. It will remain locked in the center position.

PROCEDURE

9-38. The candidate is given three trials. If he chooses to use the first (practice) as record, he must use the second as record. If he chooses to use the first trial as practice, he must use the second and third trials as record. His credit score for the test is the total of the two record trials.

(1) A different command is given for each trial. The evaluator records the time and checks the candidate's work after each command has been executed.

(2) When the candidate is ready, he is given a command—for example, REFER, DEFLECTION TWO EIGHT EIGHT ZERO (2880), REALIGN AIMING POSTS.

(3) The candidate repeats each element of the command, sets the sight with the data given in the command, and directs one assistant in realigning the aiming posts. Then he centers his traversing assembly and, with the help of the assistant gunner, moves the bridge or bipod (mount) assembly and re-lays on his aiming posts. After he lays the mortar on the realigned posts, he announces, "Up."

NOTE: This procedure ensures that, after a registration mission (using a parallel sheaf), the mortars have matching deflections.

(4) Time is taken from the announcement of refer and align aiming post to the candidate's announcement of "Up."

(5) The candidate's assistant may not leave the mortar position until he hears the word POSTS in the command REALIGN AIMING POSTS.

SCORING

9-39. Scoring procedures are as follows:

(1) No credit is given when the—

- Time exceeds 1 minute 15 seconds.
- Traversing crank is turned before the aiming posts are realigned.
- Sight is not set correctly for deflection or elevation.
- Mortar is not cross-leveled or correctly laid for elevation.
- Vertical line of the sight is more than 2 mils off the correct sight picture.
- Traversing assembly slide is more than two turns (four turns for the 120-mm) to the left or right of the center position.
- Assistant manipulates the sight or mortar for elevation or deflection.

(2) When the mortar is found to be correctly laid within the prescribed limits, credit is given as follows:

Time (Seconds) All Mortars	Point Credit for Each Trial
60 or less	10
61 to 65	9
66 to 70	8
71 to 75	7
76 or over	0

LARGE DEFLECTION AND ELEVATION CHANGES

9-40. The candidate is tested at Station No. 4 on his ability to perform the gunner's duties when he is given commands requiring a large change in deflection and elevation.

EQUIPMENT

9-41. Prescribed in Table 9-1.

CONDITIONS

9-42. A mortar is mounted with the sight installed. The sight is laid on two aiming posts placed out 50 to 100 meters from the mortar on a referred deflection of 2800 mils and elevation of 1100 mils. The elevation change will be greater than 100 mils but less than 200 mils. The mortar is within two turns of center of traverse (four turns for the 120-mm).

(1) The candidate is allowed to check the deflection and elevation setting before each trial. He is allowed to start each trial with his hand on the deflection knob.

(2) The change in deflection involves movement of the bipod assembly and causes the candidate to shift the barrel not less than 200 mils and not more than 300 mils. The change in elevation causes him to elevate or depress the barrel from low range to high range, or vice versa.

(3) Traverse extension is locked and centered (for the 120-mm).

PROCEDURE

9-43. The candidate is given three trials. If he chooses to use the first (practice) as record, he must use the second as record. If he chooses to use the first trial as practice, he must use the second and third trials as record. His credit score for the test is the total of the two record trials.

(1) The candidate is given two assistants—one assistant may visually align the mortar, while the other shifts the bipod. The assistants neither manipulate the sight nor lay the mortar for deflection. A different command is given for each trial. The evaluator records the time and checks the candidate's mortar after each command has been executed.

(2) The evaluator announces a command for a change in deflection and elevation, that requires the movement of the bipod assembly and a change in the elevation range—for example: NUMBER ONE, HE QUICK, ONE ROUND, DEFLECTION THREE ZERO FOUR FIVE (3045), CHARGE, FOUR (4), ELEVATION, ONE ONE FOUR ZERO (1140).

(3) The candidate repeats each element of the command. As soon as the deflection element is given, he places the data on the sight and re-lays on the aiming point with a compensated sight picture. As soon as the mortar is laid, he announces, "Up." The assistants must remain in their normal positions until the deflection element is given.

(4) Time is taken from the announcement of the last digit of the elevation element of the fire command until the candidate announces, "Up."

SCORING

9-44. Scoring procedures are as follows:

(1) The candidate receives no credit when the—

- Time exceeds time exceeds 55 seconds for the 120-mm or 60 seconds for all other mortars.
- Sight is not set correctly for deflection or elevation.
- Mortar is not correctly laid for elevation.
- Mortar is not cross-leveled.
- Vertical line is more than 2 mils off the compensated or aligned sight picture.
- Traversing assembly slide is more than two turns (four turns for the 120-mm) to the left or right of the center position.
- Assistants make unauthorized movements or manipulations.
- Collar assembly is not positioned on the correct saddle for the announced elevation (60-mm).
- Traverse extension is not locked and centered (for the 120-mm).

(2) When the mortar is laid correctly within the prescribed limits, credit is given as follows:

Time (Seconds)		Point Credit for Each Trial
120-mm	60-/81-mm	
35 or less	35 or less	10
36 to 40	36 to 40	9
41 to 45	41 to 45	8
46 to 50	46 to 50	7
51 to 55	51 to 55	6
-	56 to 60	5
56 or over	61 or over	0

RECIPROCAL LAYING

9-45. The candidate is tested at Station No. 5 on his ability to perform the gunner's duties in laying a mortar for direction.

EQUIPMENT

9-46. Prescribed in Table 9-1.

STATION SETUP

9-47. The evaluator sets up the aiming circle about 25 meters to the left front of the station. He levels the instrument and orients the aiming circle so that the 0-3200 line is in the general direction the mortar is mounted. A direction stake is placed out about 25 meters in front of the mortar position.

CONDITIONS

9-48. The candidate is given one assistant to shift the bipod assembly. The assistant does not manipulate the sight or mortar in laying for elevation or deflection. The conditions of the test are as follows:

(1) All mortars are mounted at 3200 mils deflection and 1100 mils elevation. The mortar is laid on a direction stake on the initial mounting azimuth with the traversing mechanism centered.

(2) The mounting azimuth on which the candidate is ordered to lay the mortar is not less than 150 mils or more than 200 mils away from the initial mounting azimuth.

(3) The evaluator sets up the aiming circle about 25 meters to the left front of the mortar, with the instrument leveled and the 0-3200 line already on the mounting azimuth on which the mortar is to be laid.

(4) The candidate is allowed to start the test with his hand on the deflection knob. The assistants must remain in their normal positions until the evaluator gives the first deflection element.

(5) Traverse extension is locked and centered (120-mm).

PROCEDURE

9-49. The candidate is given three trials. If he chooses to use the first (practice) as record, he must use the second as record. If he chooses to use the first trial as practice, he must use the second and third trials as record. His credit score for the test is the total of the two record trials.

(1) The evaluator operates the aiming circle during this test. He lays the vertical line on the mortar sight and commands AIMING POINT THIS INSTRUMENT.

(2) The candidate refers his sight to the aiming point and replies AIMING POINT IDENTIFIED.

(3) The evaluator then announces the deflection—for example, "Number one, deflection two three one five (2315)."
(4) The candidate repeats the announced deflection, sets it on his sight, and lays the mortar on the center of the aiming circle lens. He then announces, "Number one ready for recheck." The evaluator announces the new deflection immediately so that there is no delay.
(5) The operation is completed when the candidate announces, "Number one, zero (or one) mil(s), mortar laid."
(6) Time is taken from the last digit of elevation first announced by the evaluator until the candidate announces, "Number one, zero (or one) mil(s), mortar laid."

SCORING

9-50. Scoring procedures are as follows:
(1) The candidate receives no credit when the—
- Time exceeds 1 minute, 55 seconds.
- Sight is not set correctly for deflection or elevation.
- Elevation bubble is not centered.
- Cross-level bubble is not centered.
- Vertical line of the sight is not centered on the aiming circle lens.
- The mortar sight and the aiming circle deflection difference exceed 1 mil.
- Assistant performs unauthorized manipulations or movements.
- Traversing mechanism is more than two turns (four turns for the 120-mm) from center of traverse. Traverse extension is not locked in the center position.

(2) When the mortar is laid correctly within the prescribed limits, credit is given as follows:

Time (Seconds) All Mortars	Point Credit for Each Trial
55 or less	10
56 to 67	9
68 to 79	8
80 to 91	7
92 to 103	6
104 to 115	5
116 or over	0

SECTION III. GUNNER'S EXAMINATION WITH THE TRACK-MOUNTED MORTAR, M121

This examination tests the gunner's ability to perform basic mortar gunnery tasks with the track-mounted 120-mm mortar system.

SUBJECTS AND CREDITS

9-51. The examination consists of the following tests with maximum credit scores as shown.

Placing the mortar into a firing position from the traveling position	20 points
Small deflection change	20 points
Referring the sight and realigning the aiming posts	20 points
Large deflection and elevation changes	20 points
Reciprocally laying	20 points

EQUIPMENT

9-52. The minimum equipment needed for the five stations includes five mortars, five M1064A3-series carriers, five sights, one aiming circle, eight aiming posts, and five stopwatches.

ORGANIZATION

9-53. The organization prescribed in Table 9-2 is recommended for the conduct of the gunner's examination. Variations are authorized, depending on local conditions and the number of men being tested.

Table 9-2. Organization for conducting gunner's examination (carrier-mounted).

STATION	PHASE	EQUIPMENT	
		FOR CANDIDATE	FOR EXAMINING OFFICER
1	Placement of the mortar into firing position from the traveling position.	1 mortar carrier 1 mortar 1 sight	1 stopwatch
2	Small deflection change.	1 mortar carrier 1 mortar 1 sight 2 aiming posts	1 stopwatch
3	Referring of the sight and realignment of the aiming posts.	1 mortar carrier 1 mortar 1 sight 2 aiming posts	1 stopwatch
4	Large deflection and elevation changes.	1 mortar carrier 1 mortar 1 sight 2 aiming posts	1 stopwatch
5	Reciprocal laying.	1 mortar carrier 1 mortar 1 sight 2 aiming posts	1 stopwatch 1 aiming circle

PROCEDURE

9-54. The candidate carries his scorecard from station to station. The evaluator at each station fills in the time, trial scores, and credit score, and initials the appropriate spaces.

PLACEMENT OF MORTAR INTO A FIRING POSITION FROM TRAVELING POSITION, 120-mm MORTAR

9-55. The candidate is tested at Station No. 1 on his ability to perform quickly and accurately the gunner's duties in placing the mortar into the firing position from the traveling position.

EQUIPMENT

9-56. Prescribed in Table 9-2.

CONDITIONS

9-57. The mortar is secured in the traveling position by the mortar tie-down strap.

(1) The sight is in its case, and the case is in its stowage position.

(2) The candidate selects an assistant gunner.

(3) The BAD is removed and stored properly for the 120-mm mortar system.

(4) The mortar hatch covers are closed and locked (the ramp may be in the up or down position).
(5) The gunner and assistant gunner are seated in their traveling positions.
(6) The evaluator ensures that the candidate understands the requirement of the test and instructs him to report I AM READY before each trial.

PROCEDURE

9-58. The candidate is given three trials. If he chooses to use the first (practice) as record, he must use the second as record. If he chooses to use the first trial as practice, he must use the second and third trials as record. His credit score for the test is the total of the two record trials.

NOTE: The traverse extension is not used during the gunner's examination. It remains locked in the center position.

(1) The evaluator positions himself inside or outside the carrier where he can best observe the action of the candidate. The evaluator's position should not interfere with the action of the candidate.
(2) The trial is complete when the candidate announces, "Up."

SCORING

9-59. Scoring procedures are as follows:
(1) The candidate receives no credit when the—
- Time exceeds 1 minute 15 seconds.
- Sight is not set at 3200 mils deflection and 1100 mils elevation
- Elevation and cross-level bubbles are not centered (within outer red marks).
- Turntable and traversing assembly slide are not centered. The traverse extension must also be centered and locked.
- The traversing lock handle is not locked.
- The white line on the barrel is not aligned with the white line on the buffer housing assembly.
- The mortar carrier rear hatch covers are not securely latched.
- The safety mechanism is not set on FIRE (F showing)
- The cross-level locking knob is not hand-tight.
- The buffer housing assembly is not positioned against the lower collar stop.
- The BAD knob is not hand-tight.
- The assistant manipulates the sight and/or mortar for elevation and/or deflection.

(2) When the mortar is found to be in the correct firing position within the prescribed limits, credit is given as follows:

Time (Seconds)	Point Credit for Each Trial
50 or less	10
51 to 57	9
58 to 63	8
64 to 69	7
70 to 75	6
76 or over	0

SMALL DEFLECTION CHANGE

9-60. The candidate is tested at Station No. 2 on his ability to perform the gunner's duties when he is given commands that require a change in deflection.

EQUIPMENT

9-61. Prescribed in Table 9-2.

CONDITIONS

9-62. The mortar is prepared for action with sight installed.

(1) The sight is laid on two aiming posts placed out 50 and 100 meters from the mortar on a referred deflection of 2800 mils and 1100 mils elevation. The turntable is centered, and the traversing mechanism is within four turns of center of traverse, and the traverse extension is centered and locked. The vertical line of the sight is on the left edge of both aiming posts.

(2) The change in deflection causes the candidate to traverse the mortar 20 to 60 mils for deflection and 30 to 90 mils for elevation.

(3) The candidate is allowed to begin the test with his hand on the deflection knob.

PROCEDURE

9-63. The candidate is given three trials. If he chooses to use the first (practice) as record, he must use the second as record. If he chooses to use the first trial as practice, he must use the second and third trials as record. His credit score for the test is the total of the two record trials.

(1) The evaluator announces an initial command requiring a change in deflection.

(2) The candidate repeats each element of the command, sets the sight with the data given, and traverses and cross-levels the mortar until he obtains the correct sight picture.

(3) Time is charged against the candidate from the announcement of the last digit of the elevation element until the candidate's announcement of "Up."

SCORING

9-64. Scoring procedures are as follows:

(1) The candidate receives no credit when—

- The time exceeds 35 seconds.
- The deflection is not indexed correctly.
- The elevation and cross-level bubbles are not centered within the outer lines.
- The vertical cross line of the sight is not within 2 mils of the left edge of the aiming post.
- The traverse extension is centered and locked in position.

(2) When the mortar is laid correctly within the prescribed limits, credit is given as follows:

Time (Seconds)	Point Credit for Each Trial
20 or less	10
21 to 23	9
24 to 26	8
27 to 31	7
32 to 35	6
36 or over	0

REFERRING OF THE SIGHT AND REALIGNMENT OF AIMING POSTS

9-65. The candidate is tested at Station No. 3 on his ability to perform the gunner's duties in referring the sight and realigning the aiming posts.

EQUIPMENT

9-66. Prescribed in Table 9-2.

CONDITIONS

9-67. The sight is laid on two aiming posts (placed out 50 and 100 meters from the mortar) on a referred deflection of 2800 mils and 1100 mils elevation. The ramp is down with ammunition bearer in or outside the vehicle.

(1) The mortar is within four turns of center of traverse. The candidate receives an administrative command with a deflection of 2860 or 2740 mils. The mortar is then re-laid on the aiming posts using the traversing crank.

(2) The candidate checks the conditions before each trial. He is allowed to start the test with his hand on the deflection knob of the sight.

(3) The change in deflection in the command must be less than 25 mils but greater than 5 mils. The elevation remains constant at 1100 mils.

(4) The candidate selects two assistants—one assistant realigns the aiming posts and the other assists in moving the turntable and cross-leveling. The assistants do not manipulate the sight or mortar for elevation or deflection.

(5) The traversing extension will not be used. It will remain locked in the center position.

PROCEDURE

9-68. The candidate is given three trials. If he chooses to use the first (practice) as record, he must use the second as record. If he chooses to use the first trial as practice, he must use the second and third trials as record. His credit score for the test is the total of the two record trials.

(1) A different command is given for each trial. The evaluator records the time and checks the candidate's work after each command has been executed.

(2) When the candidate is ready, he is given a command—for example, REFER, DEFLECTION TWO EIGHT EIGHT ZERO (2880), REALIGN AIMING POSTS.

(3) The candidate repeats each element of the command, sets the sight with the data given in the command, and directs one assistant in realigning the aiming posts. Upon completion of these actions, the candidate centers the traversing assembly and, with the help of the other assistant, moves the turntable and re-lays on the aiming posts. After he lays the mortar on the realigned aiming posts, he announces, "Up."

(4) Time is taken from the announcement of REFER, DEFLECTION TWO EIGHT EIGHT ZERO (2880), REALIGN AIMING POSTS until the candidate announces, "Up."

(5) The candidate's assistants are not permitted to leave the carrier until the command REALIGN AIMING POSTS is given.

SCORING

9-69. Scoring procedures are as follows:

(1) The candidate receives no credit when the—

- Time exceeds 1 minute, 20 seconds.
- Traversing assembly slide is turned before the aiming posts are realigned.
- Traverse extension and turntable are not locked in the center position.
- Sight is set incorrectly for deflection or elevation.

- Elevation and deflection bubbles are not centered.
- Sight picture is not correct.
- Traversing assembly slide is more than four turns to the left or right of the center position.
- Assistant manipulates the sight or mortar for elevation or deflection.

(2) When the mortar is laid correctly within the prescribed limits, credit is given as follows:

Time (Seconds)	Point Credit for Each Trial
60 or less	10
61 to 65	9
66 to 70	8
71 to 75	7
76 to 80	6
81 or over	0

NOTE: If for any reason either of the aiming posts fall before the candidate announces, "Up," the trial will be terminated and re-administered.

LARGE DEFLECTION AND ELEVATION CHANGES

9-70. The candidate is tested at Station No. 4 on his ability to perform the gunner's duties when he is given commands requiring a large change in deflection and elevation.

EQUIPMENT

9-71. Prescribed in Table 9-2.

CONDITIONS

9-72. The evaluator selects a deflection change that is at least 200 but not more than 300 mils off the referred deflection of 2800 mils and 1100 mils elevation.

(1) The change in deflection involves movement of the turntable. The change in elevation causes the candidate to elevate or depress the barrel from low range to high range, or vice versa. The change in elevation is not less than 100 mils and not more than 200 mils.

(2) The candidate selects two assistants.

(3) Traversing extension and turntable are locked at the center position.

(4) The candidate is allowed to check the deflection and elevation settings before each trial.

(5) The candidate is allowed to begin the test with his hand on the deflection knob.

PROCEDURE

9-73. The candidate is given three trials. If he chooses to use the first (practice) as record, he must use the second as record. If he chooses to use the first trial as practice, he must use the second and third trials as record. His credit score for the test is the total of the two record trials. He selects two assistants—one assistant may visually align the mortar, while the other elevates or depresses the standard assembly and assists in moving the turntable. The assistant does not manipulate the sight or lay the mortar for deflection.

(1) The evaluator announces a command that requires a change in deflection involving movement of the turntable and an elevation change involving movement of the elevating mechanism cam.

(2) The candidate is allowed to start the test with his hand on the deflection knob. He repeats each element of the fire command and sets the sight with the data given in the command.

(3) As soon as the deflection element is announced, he can immediately place the data on the sight. The assistants must remain in their normal positions until the elevation element is given.
(4) The evaluator times the candidate from the announcement of the last digit of the elevation command to the candidate's announcement of "Up."
(5) A different deflection and elevation are given in the second trial.

SCORING

9-74. Scoring procedures are as follows:

(1) The candidate receives no credit when the—
- Time exceeds 65 seconds.
- Sight is not indexed correctly for deflection or elevation.
- Elevation and cross-level bubbles are not centered.
- Vertical line of the sight is more than 2 mils off the correct compensated sight picture.
- Traversing mechanism is more than four turns off center of traverse.
- Turntable is not in the locked position.
- Assistants make any unauthorized manipulation of the mortar or sightunit for elevation or deflection.
- Traversing extension is not locked in the center position.

(2) When the mortar is laid correctly within the prescribed limits, credit is given as follows:

Time (Seconds)	Point Credit for Each Trial
45 or less	10
46 to 50	9
51 to 55	8
56 to 60	7
61 to 65	6
66 or over	0

RECIPROCAL LAYING

9-75. The candidate is tested at Station No. 5 on his ability to quickly and accurately perform the gunner's duties in reciprocally laying the mortar.

EQUIPMENT

9-76. Prescribed in Table 9-2.

CONDITIONS

9-77. The mortar is prepared for action and laid on an initial azimuth by the evaluator and his assistants.

(1) The sight is set at 3200 mils deflection and 1100 mils elevation.
(2) The evaluator sets up the aiming circle about 75 meters from the carrier where it is visible to the gunner.
(3) The evaluator orients the aiming circle on an azimuth of not less than 150 mils or not more than 200 mils away from the initial azimuth.
(4) The candidate is allowed to begin the test with his hand on the deflection knob with the carrier engine running.
(5) A relay man is positioned halfway between the aiming circle and carrier to relay commands.

(6) The traversing mechanism is centered and the traversing extension is locked in the center position.

PROCEDURE

9-78. The candidate is given three trials. If he chooses to use the first (practice) as record, then he must use the second as record. If he chooses to use the first trial as practice, then he must use the second and third trials as record.

(1) The evaluator operates the aiming circle during the test.
(2) Once the candidate identifies the aiming point, the evaluator announces the deflection.
(3) Time is started from the last digit of the first deflection announced by the evaluator.
(4) When the candidate announces, "Ready for recheck," the evaluator immediately announces the new deflection.
(5) The trial is complete when the gunner announces, "Zero mils (or one mil), mortar laid."

SCORING

9-79. Scoring procedures are as follows:

(1) The candidate receives no credit when the—
- Time exceeds 1 minute, 35 seconds.
- Difference between the deflection setting on the sight and the last deflection reading from the aiming circle is more than 1 mil.
- Elevation and cross-level bubbles are not centered.
- Vertical reticle line of the sight is not centered on the lens of the aiming circle.
- Traversing extension is not locked in the center position.
- The mortar sight and the aiming circle are not sighted on each other with a difference of more than 1 mil between deflection readings.
- Turntable is not centered and locked.

(2) When the mortar is laid correctly, credit is given as follows:

Time (Seconds)	Point Credit for Each Trial
55 or less	10
56 to 67	9
68 to 79	8
80 to 90	7
91 to 95	6
96 or over	0

SUPPORT SQUAD

9-80. Support squads are located in cavalry units, task units, and infantry units. The gunner's examination for the support squad is the same as that used by the mortar section, except for the reciprocal laying, and refer and realign stations. The tests below are substituted respectively for the reciprocal laying and for the refer and realign stations. The entire refer and realign station is eliminated, and the procedures for direct lay are used.

RECIPROCAL LAYING

9-81. In this test (120-mm mortar only) the compass is substituted for the aiming circle.

Conditions

9-82. The mortar is prepared for action and laid on an initial azimuth by the evaluator and his assistants.

- The turntable is centered with the sight set at 3200 mils deflection and 1100 mils elevation.
- The evaluator places the M2 compass on a stake about 75 meters from the mortar carrier and measures the azimuth to the mortar sight. He then selects a mounting azimuth from the azimuth measured to the mortar sight.
- The candidate selects an assistant gunner and driver.
- The evaluator ensures that the candidate understands the requirements of the test and instructs him to report I AM READY before each trial.

Procedure

9-83. The candidate is given three trials. If he chooses to use the first (practice) as record, he must use the second as record. If he chooses to use the first trial as practice, he must use the second and third trials as record. His credit score for the test is the total of the two record trials.

- The evaluator operates the compass during the test.
- When the candidate identifies the aiming point, the evaluator announces the deflection.
- When the gunner is laid back on the aiming point, he announces, "Up," and the evaluator commands REFER, DEFLECTION TWO EIGHT ZERO ZERO (2800), PLACE OUT AIMING POSTS.
- The ammunition bearer moves out as soon as the initial deflection has been announced by the evaluator and places out the aiming posts as directed by the gunner.
- The trial is complete when the gunner announces, "Up," after the aiming posts are in position.

Scoring

9-84. The scoring procedures are as follows:

- The candidate receives no credit when the—
  - Time exceeds 2 minutes, 5 seconds.
  - Deflection placed on the sight is incorrect.
  - Elevation and cross-level bubbles of the sight are not centered.
  - Turntable is not centered.
  - Aiming posts are not properly aligned.
  - Mortar is not within four turns of center of traverse.
- When the mortar is laid correctly, credit is given as follows:

Time (Seconds)	Point Credit for Each Trial
70 or less	10
71 to 81	9
82 to 92	8
93 to 103	7
104 to 114	6
115 to 125	5
126 or over	0

RECIPROCAL LAYING (INFANTRY BRIGADE COMBAT TEAM MORTARS)

9-85. In this test, the sight-to-sight method is used to reciprocally lay the mortar.

Conditions

9-86. The mortar is prepared for action on an azimuth by the evaluator and his assistants.

- The sight is set at 3200 mils deflection and 1100 mils elevation.
- The evaluator sets up the base mortar about 35 meters from the test mortars where it is visible to the gunner.
- The evaluator orients the base mortar on an azimuth of not less than 150 mils or more than 200 mils away from the initial azimuth.
- The candidate selects an assistant gunner (optional for the 60-mm mortar).
- The candidate is allowed to begin the test with his hand on the deflection micrometer knob.
- The evaluator ensures that the candidate understands the requirements of the test, and he instructs him to report I AM READY before each trial.

Procedure

9-87. The candidate is given three trials. If he chooses to use the first (practice) as record, he must use the second as record. If he chooses to use the first trial as practice, he must use the second and third trials as record. His credit score for the test is the total of the two record trials.

- The evaluator positions himself at the base mortar and commands AIMING POINT THIS INSTRUMENT.
- The gunner refers his sight to the aiming point and replies, "Aiming point identified."
- The evaluator reads the deflection from the sight of the base mortar. He determines the back azimuth of that deflection by adding/subtracting 3200 mils and announces the deflection—for example, the deflection on the base mortar is 1200 mils. The evaluator adds 3200 mils to this deflection (1200 + 3200 = 4400 mils) and announces, "NUMBER ONE, DEFLECTION FOUR FOUR ZERO ZERO (4400)."
- The candidate repeats the announced deflection, sets it on the sight, and, with the help of his assistant gunner, lays the mortar on the center of the base mortar sight lens. He then announces, "Number one ready for recheck." The evaluator announces the new deflection as soon as possible so that there is no delay.
- The operation is completed when the candidate announces, "Number one, zero (or one) mil(s), mortar laid."

Scoring

9-88. The scoring procedures are as follows:

- The candidate receives no credit when the—
  - Time exceeds 1 minute, 55 seconds.
  - Deflection placed on the sight is incorrect.
  - Elevation and cross-level bubbles of the sight are not centered.
  - Mortar is not within two turns of center of traverse.
  - The sight and the base mortar sight are not sighted on each other with a difference of not more than 1 mil between deflection readings.

- When the mortar is laid correctly, credit is given as follows:

Time (Seconds) IBCT	Point Credit for Each Trial
55 or less	10
56 to 67	9
68 to 79	8
80 to 91	7
92 to 103	6
104 to 115	5
116 or over	0

Appendix A

Mortar Training Strategy

This appendix provides a comprehensive unit training strategy for training mortarmen. Leaders have the means to develop a program for training their mortar units to full mission proficiency. This training strategy applies to all mortars in all organizations of the U.S. Army. It must be adapted to a unit's mission, commander's guidance, local training resources, and unit training status.

TRAINING PHILOSOPHY

A-1. This training strategy synchronizes institutional and unit components to produce units that are trained to win on the battlefield. It includes the training documents, institutional training, unit training, and training resources needed to achieve and sustain the required outcome. It covers the skills required for individual, crew, leader, and collective proficiency and ensures that the strategy is linked horizontally within the career management field (CMF) and vertically between officer and enlisted. This strategy integrates information from several publications, including this manual, into a single-source document (see References).

UNIT MORTAR TRAINING

A-2. Technical and tactical proficiency is based on sound training. The importance of training the complete indirect fire team (skilled and proficient mortarmen and observers) must not be overlooked within the context of the battalion's overall training strategy. Unless leaders have a mortar background, they may not understand the distinct training requirements and tactical role of mortars. This ensures that they allocate priorities and resources required for effective training to mortars. Furthermore, leaders may also require training. This can be achieved by officer professional development (OPD) and noncommissioned officer professional development (NCOPD) instruction on mortars, which include both technical and tactical mortar subjects, and the call for and adjustment of indirect fires.

A-3. Once mortarmen and observers have mastered their own tasks, they must be fully integrated into the training exercises of the company, battalion, or both. However, mortars suffer from not having a training device (such as MILES) to simulate the terminal effects of mortar rounds. As a result, maneuver units tend to under-employ their supporting mortars. Despite the current absence of such devices, there are other techniques to assess the effects of indirect fire. (These are outlined FM 25-4.) Fire missions not specifically using enemy targets, such as registration and adjusting FPF, should also be routinely conducted in maneuver exercises.

A-4. A training plan that employs mortarmen or FIST personnel only as OPFOR riflemen is not effective for many reasons. Firstly, the indirect fire team is not being trained in the technical and tactical tasks pertinent to their mission. Secondly, riflemen are deprived of a valid training experience as OPFOR. Thirdly, maneuver units are not trained to employ their mortar for indirect fire support.

MORTAR TRAINING AT TRAINING BASE

A-5. The mortar unit training strategy begins with the training base. Leaders must know what skills mortarmen bring with them when they report to their unit. This forms the base to build mortar training in the unit. The career pattern for NCOs and officers is depicted in individual training. It entails alternating between the training base and units with progressively advanced levels of training and responsibility. Mortar training in the institution focuses on preparing the Soldier for these positions. Depending on the course, the training focus includes technical training in mortar skills, mortar familiarization, and mortar issues update (Table A-1).

ONE-STATION UNIT TRAINING (11C)

A-6. One-station unit training (OSUT) trains new Soldiers for their initial assignment in IBCT or HBCT units. Training is divided into two phases. Phase I (seven weeks) teaches common entry-level infantry tasks. Phase II continues to foster the self-discipline, motivation, physical readiness, and proficiency in combat survivability started in Phase I. The 11C Soldiers receive instruction in mortar systems to prepare them for their specific unit assignments. Soldiers receive familiarization on FDC and FO procedures and are required to pass a mortar gunner's examination to be awarded their MOS.

BASIC NONCOMMISSIONED OFFICER COURSE (11C)

A-7. Basic Noncommissioned Officer Course (BNCOC) teaches junior NCOs to lead, train, and direct subordinates in the maintenance, operation, and employment of weapons and equipment. The instruction includes FDC procedures, fire planning, tactical employment of mortars, and maintenance.

MANEUVER ADVANCED NONCOMMISSIONED OFFICER COURSE

A-8. Maneuver Advanced Noncommissioned Officer Course (MANCOC) prepares NCOs to lead a mortar platoon in combat as part of the battalion team. This includes fostering an understanding of the battalion task force concept and how it fights. Training that applies to mortars includes fire planning, FDC, and FO procedures.

INFANTRY MORTAR LEADER COURSE

A-9. Infantry Mortar Leader Course (IMLC) provides lieutenants and NCOs (sergeant through master sergeant) with the knowledge to supervise and direct the fire of a mortar platoon. Instructions include tactical employment of the mortar platoon, graphics, fire planning, mechanical training, FO procedures, and fire direction control procedures. Officers are awarded the additional skill identifier of 3Z. Commanders must ensure that IMLC graduates fill mortar leadership positions. The skills personnel have learned are complex and perishable and must be sustained in the unit.

INFANTRY BASIC OFFICER LEADER'S COURSE

A-10. Infantry Basic Officer Leader's Course (IBOLC) trains lieutenants in weapons, equipment, leadership, and tactics. It also teaches them how to instruct their subordinates in the maintenance, operation, and employment of weapons and equipment for combat. Students receive instruction in mechanical operation of the mortar as well as detailed instruction on FO procedures.

INFANTRY CAREER CAPTAIN'S COURSE

A-11. Infantry Career Captain's Course (ICCC) trains first lieutenants and captains in leadership, war fighting, and sustainment skills required to serve as company commanders and staff officers at battalion and brigade levels. Mortar training focuses on supervisory tasks.

PRE-COMMAND COURSE

A-12. Pre-command Course (PCC) is intended for field-grade officers (majors through colonel) designated for battalion and brigade command. Training consists of a review and update on mortar issues such as new equipment; tactics, techniques, and procedures (TTPs); battle drills; and safety.

Table A-1. Institution courses.

COURSE	SKILL LEVEL					COURSE FOCUS
	1	2	3	4	OTHER	
One-Station Unit Training	X	X				A
Basic NCO Course		X	X			C,D
Advanced NCO Course				X		C,D
Infantry Mortar Leader Course			X	X	X	B,C,D
Infantry Officer Basic Course					X	C
Infantry Career Captain Course					X	D
Pre-Command Course					X	C,D
A = MOS-PRODUCING B = ADDITIONAL SKILL IDENTIFIER FOR OFFICERS C = FAMILIARIZATION D = REVIEW/UPDATE						

TRAINING IN UNITS

A-13. A unit training program consists of initial and sustainment training. Both may include individual and collective skills. Resources, such as devices, simulators, simulations, ranges, and ammunition, further develop skills learned in the institution. The critical aspect of unit training is to integrate Soldiers into a collective, cohesive effort as a mortar squad or platoon member. Drills, situational training exercises (STXs), and live-fire drills develop these collective skills.

TRAINING PLAN DEVELOPMENT

A-14. Training plans are developed at higher headquarters and published in the form of command guidance so that subordinate units can develop their plans. The process begins with identifying the unit's mission-essential task list (METL). The METL contains all the collective tasks that a unit must perform to be successful in combat. (FM 7-0 contains specific information on the METL development process.)

Mission-Essential Task List Tasks

A-15. Commanders assess the unit's proficiency level in each METL task. Information for this assessment is obtained by reviewing past gunner and FDC examinations, ARTEP results, external evaluation, after-action reviews (AARs), and by observing the execution of current training.

A-16. Once the assessment is complete, the commander lists the tasks in priority. Tasks that are identified as untrained (U) and are critical to the mission have training priority, followed by tasks that need practice (P) and tasks that are trained (T) to standard. Resources (ranges, ammunition, equipment, and time) are requested to train those tasks that do not meet the standard (U and P), while sustaining the proficiency of the tasks that do meet the standard (T). The commander refines his plan in the form of a training guidance and training schedules. (FM 7-1 contains specific information on the training plan development process.)

Initial Training

A-17. Initial training trains Soldiers and units to a high degree of proficiency. Initial training ensures that each Soldier, squad, and platoon has the basic core skills proficiency for his skill level or the

collective team. Initial training must be trained correctly to a rigid standard so that proficiency will be retained longer. Decay in skill proficiency will occur due to a lack of available training time, skill difficulty, or personnel turnover.

Sustainment Training

A-18. Sustainment training reduces skill decay and maintains proficiency within the band of excellence described in FM 7-0. Retraining may be required if a long period elapses between initial and sustainment training. Once proficiency is demonstrated in a task or collective event, more difficult scenarios and exercises should be developed to train to a higher level of proficiency, while sustaining previously learned skills.

INTEGRATED TRAINING STRATEGY

A-19. Figure A-1 outlines a logical progression of events that a mortar platoon can adapt to their training strategy. Mortar squads and the FDC are dual-tracked to focus on their specific training needs. Both tracks must be integrated to develop a mortar platoon that fights as one unit. Individual and collective training must be evaluated against specific standards and discussed in AARs. Objective evaluations provide readiness indicators and determine future training requirements.

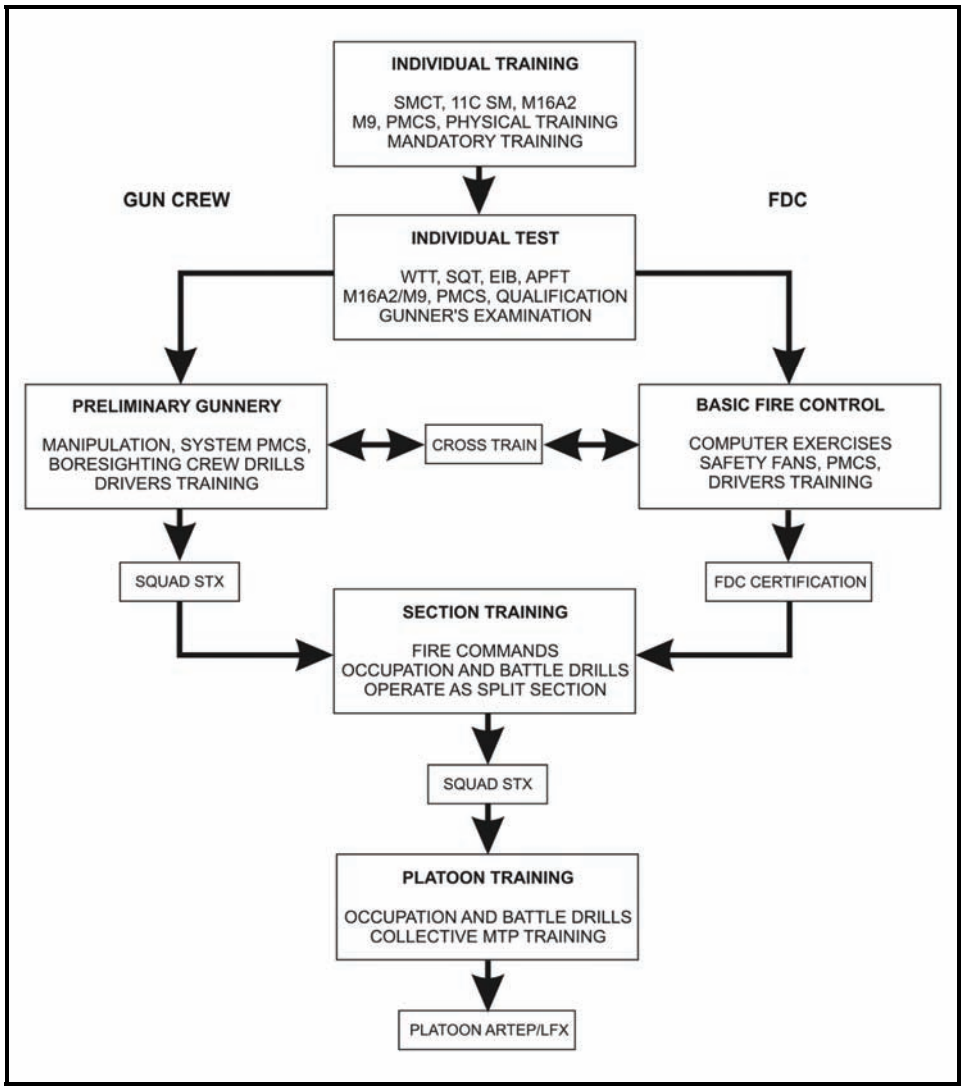

Figure A-1. Integrated training strategy.

Common Tasks

A-20. These tasks are found in STP 7-11B1-SM-TG, Skill Level 1 and in STP 7-11B24-SM-TG, Skill Levels 2, 3, and 4. These manuals contain the common tasks that all Soldiers must know, regardless of MOS or duty position, to help them fight, survive, and win in combat. Mastery of these common tasks is a prerequisite for individual training specific to mortars. The communications and land navigation common tasks are vital.

MOS 11C Tasks

A-21. These tasks are found in STP 7-11C14-SM-TG, Skill Levels 1-4 for MOS 11C. This manual contains the individual tasks specific to mortarmen. The trainer's guide provides leaders the information to develop the individual portions of a unit training plan. Each 11C task is listed in this guide, along with the following.

Training Extension Courses

A-22. Service schools use training extension courses (TECs) to provide their expertise directly to units in the field. This is accomplished through lessons in the form of booklets, video slides, audio tapes, videotapes, and Electronic Information Delivery System (EIDS) machines. These lessons focus on individual tasks and are stocked in unit learning centers and the local training support centers. TEC materials provide standardized instruction, which is helpful to Soldiers as they move from unit to unit. Preparation time is also saved. However, trainers must ensure the lessons directly and fully support the training objectives.

Army Correspondence Course Program

A-23. The Army Correspondence Course Program (ACCP) provides printed training courses through the mail to Soldiers. It is a valuable program for training the trainer, skill progression, and functional training for a specific specialty, MOS, or duty position. However, planning is needed. Leaders must identify courses that support the goals of the long-range training plan; Soldier's enrollment must then be arranged. (ACCP includes the infantry mortar platoon leaders' course.)

CROSS TRAINING

A-24. A Soldier's individual training tends to focus on his duty position. The assistant computer concentrates on FDC tasks while the squad leader concentrates on mortar mechanical tasks and leading the squad. However, this focus should not exclude other mortar training. Continuous training in duty-specific tasks can become boring to Soldiers and deprive them of gaining broad proficiency in their MOS. Casualties (whether in war or in training) can quickly render the mortars ineffective if key personnel are lost. These variables make cross training essential. For example, cross training ensures that a squad leader can assume the duties of a computer and that subordinates are ready to assume the roles of their supervisors.

COLLECTIVE TRAINING

A-25. Collective training includes squad, section, and platoon drills and exercises.

Squad Training

A-26. The core of squad training is crew drill. Squad-level mortar tasks are in the infantry MTP. This training can be performed in garrison (using devices or live ammunition). Once these tasks are mastered, performing them under different conditions (urbanized terrain, limited visibility, CBRN) increases the challenge. Cross training is accomplished at this level by rotating Soldiers among duty positions, such as squad leader and FDC positions, while providing coaching.

A-27. The foundation of squad training is sound individual training. If individual proficiency is effectively sustained, new Soldiers can be readily integrated into the unit during collective training.

They arrive at the unit proficient in specific tasks learned in the training base. These new Soldiers learn additional tasks while training with their experienced peers and their squad leaders.

Section and Platoon Training

A-28. The core section and platoon tasks are found in the ARTEP MTP. This training usually consists of an exercise in the field: live-fire exercise (LFX), STX (either alone or with a rifle company), or field training exercises (FTX) as part of the battalion. LFXs may involve subcaliber, full-range training cartridge (FRTC), short-range training round (SRTR), or service ammunition. STXs and FTXs may entail dry-fire, live-fire, or devices, either alone or in combination.

A-29. The FIST must be a part of this training. An LFX must never take place without the FISTs who typically deploy with the supported companies. The complete indirect fire team (see Chapter 1) must train together for maximum efficiency. This teaches the capabilities, limitations, and unique requirements of operating mortars.

A-30. Another important area is the mortar's role in overall task force operations. This collective training mainly involves leaders in an FTX. However, mortars must be considered along with other fire support assets when conducting a map exercise (MAPEX), command field exercise (CFX), tactical exercise without troops (TEWT), or command post exercise (CPX).

Collective Training Resources

Drill Books

A-31. Crew and battle drills are published in a pocket-sized ARTEP manual called a drill book for each unit organized under a different TOE. (See ARTEP 7-90-Drill.)

- Battle drills are a specific category of collective tasks performed at squad, section, or platoon level. They are vital to the mortar's success in combat. Battle drills are mostly independent of mission, enemy, terrain and weather, troops and support available, time available, civil considerations (METT-TC) and require minimal leader actions to execute. They are usually executed or initiated on a cue such as an enemy action or a simple leader order. Battle drills are standardized throughout the U.S. Army and may not be modified in training. The mortar unit is required to be proficient in all battle drills contained in the drill book. Less critical drills are published in other sources such as training circulars or field manuals.
- Mortar drills are divided into two general areas. The first are those battle drills that previously were termed "crew drills." These focus on the mechanical manipulation of the mortar such as small deflection changes or removing a misfire. Full proficiency in these tasks is a prerequisite for performing fire support missions. The second area encompasses those battle drills essential to combat survival. These include such tasks as React to Chemical Attack, React to Indirect Fire, or React to Nuclear Attack.

Mission Training Plan

A-32. The mission training plan (MTP) is a descriptive ARTEP document for training mortarmen to critical wartime mission proficiency. It gives the mortar platoon or section a clear description of "what" and "how" to train. This is achieved through comprehensive, detailed training and evaluation outlines (T&EOs); guidance on training exercises; and other related training management aids. While its focus is on collective training, the MTP also provides matrixes that identify individual tasks, common 11C SM tasks, and Military Qualification Standard (MQS) tasks. Like the drill book, the mortar MTP applies to platoons or sections organized under a specific TOE (see ARTEP 7-90-MTP).

Battalion-Level Training Model

A-33. The battalion-level training model (BLTM) is a means to quantify the cost of maintaining training readiness. This cost is expressed in terms of types of training events, their annual frequency, and the equipment miles/hours expended. This model is used to forecast and resource requirements to

support the unit's specified training readiness level. It does not, however, prescribe what training a unit must conduct to maintain this level. Rather, the BLTM provides a basis for understanding the trade-off between a unit's training resources and its training strategy. This helps leaders program training alternatives to achieve and maintain combat readiness. The frequency of training events under the BLTM is reflected in the battalion's long-range training plan.

EXAMPLE ANNUAL MORTAR TRAINING PROGRAMS

A-34. Figure A-2 depicts an example IBCT battalion mortar training program, and Figure A-3 depicts an example HBCT battalion mortar training program.

JANUARY IND WPN QUAL/SUST CREW WPN QUAL/SUST MAINTENANCE SQD/SEC/FDC DRILL (SRTR) PLT/SEC LFX GUNNER'S EXAM FDC CERTIFICATION	**FEBRUARY** SQD/SEC/FDC DRILL (LITR) PLT FTX CO FTX BN FTX DEPEX MAINTENANCE PLT STX (81-mm ONLY) SUPPORT CO STX	**MARCH** POST SUPPORT/BN CPX SQD/SEC/FDC DRILL (SRTR) ITEP/CMT CO TEWT
APRIL IND WPN QUAL/SUST CREW WPN SUST MAINTENANCE SQD/SEC/FDC DRILL (LITR) SEC/PLT LFX	**MAY** SQD DRILL PLT STXs CO FTXs DEPEX BN FTX MAINTENANCE SUPPORT CO FTX	**JUNE** POST SUPPORT BN CPX CO MAPEX ITEP (EIB) SQD/SEC/FDC DRILL (LITR)
JULY NG & ROTC SUPPORT SQD/SEC/FDC DRILL (SRTR)	**AUGUST** IND WPN QUAL/SUST CREW WPN QUAL/SUST BN FTX CALFEX/LFX MAINTENANCE FDC EXAM GUNNER'S EXAM SQD/SEC/FDC DRILL (LITR)	**SEPTEMBER** SQD DRILL MAINTENANCE CO FTXs BN CFX BN FTX (EXT EVAL) SQD/SEC/FDC DRILL (SRTR/LITR) PLT STX (81-mm) DEPEX
OCTOBER POST SUPPORT ITEP (WTT) CMT BN TEWT CO MAPEXs CPX (81-mm) SQD/SEC/FDC DRILL (LITR)	**NOVEMBER** IND WPN QUAL/SUST CREW WPN/SUST DEPEX MAINTENANCE SQD/SEC/FDC DRILL (SRTR) GUNNER'S EXAM FDC CERTIFICATION	**DECEMBER** POST SUPPORT ITEP CMT SQD/SEC/FDC DRILL (LITR)

Figure A-2. Example training program for IBCT battalion.

JANUARY	FEBRUARY	MARCH
CMT	MAINTENANCE	MAINTENANCE
ITEP	CO FTX	POST SUPPORT/CO
BN CPX	BN FTX	MAPEX
MAINTENANCE	DEPEX	BN TEWT
SQD DRILLS	SQD/SEC/FDC DRILL	ITEP
PLT STX	PLT FTX	CMT
SQD/SEC FDC DRILL (SRTR)		IND WPN QUAL/SUST
IND WPN QUAL/SUST		SQD/SEC/FDC DRILL (SRTR)
FDC CERTIFICATION		
APRIL	**MAY**	**JUNE**
GUNNERY QUAL (MTA)	ITEP	CO FTX
CALFEX (MTA)	BN CPX	BN FCX
MAINTENANCE	PLT STX	BN DEPEX
GUNNER'S EXAM	MAINTENANCE	BN FTX (EXT EVAL [HTA])
LFX (M60, .50-CAL, 120-mm)	SQD/SEC BATTLE DRILLS (SRTR/LITR)	MAINTENANCE
CALFEX/LFX DRILL (60-mm SUBCAL)	GUNNER'S EXAM	SQD/SEC/FDC DRILL
		BN EXT EVAL/LFX
JULY	**AUGUST**	**SEPTEMPER**
POST SUPPORT	IG INSPECTION	CO FTX
ITEP (EIB)	ITEP	MAINTENANCE
BN MAPEX	BN CPX	BN DEPEX
IND WPN QUAL/SUST	MAINTENANCE	BN FTX-(REFORGER)
CMT	SQD/SEC/FDC DRILL (60-mm SUBCAL)	SQD/SEC/FDC DRILL (SRTR)
SQD/SEC/FDC DRILL (SRTR)	PLT STX	PLT STX
MAINTENANCE	FDC EXAM	
	GUNNER'S EXAM	
OCTOBER	**NOVEMBER**	**DECEMBER**
MAINTENANCE	IND WP QUAL/SUST	MAINTENANCE
POST SUPPORT	GUNNERY QUAL (MTA)	DEPEX
CO TEWT	MAINTENANCE	POST SUPPORT
ITEP (WTT)	BN CFX	ITEP
CMT	SQD/SEC/FDC DRILL (SRTR)	IND WPN QUAL/SUST
SQD/SEC/FDC DRILL	FDC EXAM	CMT
	GUNNERY QUAL (.50-CAL, M60)	SQD/SEC/FDC DRILL
	LFX	

Figure A-3. Example training program for HBCT battalion.

TRAINING EVALUATION

A-35. Evaluation cannot be separated from effective training. It occurs during the top-down analysis when planners develop the training plan. Planners use various sources of information to assess their unit's individual and collective training status. Evaluation is continuous during training. Soldiers receive feedback through coaching and AARs. Leaders also assess their own training plan and the instructional skills of their subordinate leaders. After training, leaders evaluate by sampling training or reviewing AARs. Much of this evaluation is conducted informally. Formal evaluations occur under the Individual Training and Evaluation Program (ITEP) and the Army Training and Evaluation Program (ARTEP) to assess individual and collective training respectively.

INDIVIDUAL TRAINING

Commander's Evaluation

A-36. The commander's evaluation is routinely conducted in units. Commanders select and evaluate individual tasks that support their unit mission and contribute to unit proficiency. This may be performed through local tests or assessments of Soldier proficiency on crucial MOS tasks or common tasks. The commander's evaluation is based on year-round, constant evaluation by the chain of command. It is supported by the MOS 11C Soldier's manuals, trainer's guides, and job books.

Warrior Task Test

A-37. The warrior task test (WTT) is a hands-on test that evaluates basic survival and combat tasks. It is taken directly from STP 7-11B1-SM-TG, STP 7-11B24-SM-TG, and STP 7-llCl4-SM-TG. The WTT gives the unit commander regular, objective feedback on common task proficiency.

Gunner's Examination

A-38. The gunner's examination is a continuation of the mortar-based drills in which a mortarman's proficiency as a gunner is established. The examination is contained in Chapter 9 of this manual. It includes tests, equipment, conditions, testing procedures, scoring, and administrative procedures. It focuses on the individual qualification of the Soldier in the role of a gunner. However, the gunner's success also depends on the collective performance of his assistants. Within these limitations, evaluators should try to standardize the examination. The BLTM specifies that the squad leader, gunner, and assistant gunner should pass the gunner's exam semiannually. All gunners should have a current qualification before an LFX (whether using service or subcaliber ammunition).

FDC Certification

A-39. This provides commanders a means to verify that their FDC mortarmen have the knowledge and skills for their positions: squad leader, FDC computer, section sergeant, platoon sergeant, and platoon leader. Certification helps ensure that ammunition is wisely expended and that training is conducted safely and effectively. Mortarmen are certified when they receive a passing score on the two-part examination. (See FM 3-22.91 for FDC certification.)

COLLECTIVE TRAINING

Army Training and Evaluation Program

A-40. The aim of collective training is to provide units the skills required to perform unit-level tasks. The ARTEP is the overall program for this collective training. It prescribes the collective tasks that a unit must successfully perform to accomplish its mission and to survive in combat. These tasks include conditions and performance standards, and they are located in MTPs and drill books.

External Evaluation

A-41. The commander formally determines the status of his collective training through external evaluation. The external evaluation gives the commander an objective appraisal of this status by using mortar expertise found outside the normal chain of command. The external evaluation is not a test in which a unit passes or fails; it is a diagnostic tool for identifying training strengths and weaknesses. It must be emphasized that an external evaluation is not a specific training event but a means to evaluate a training event. Mortar units undergo external evaluations during an LFX, FTX, or a combination thereof. The unit may be evaluated alone, as part of its parent unit, or with other mortar units. The MTP provides guidance on planning, preparing, and conducting an external evaluation.

Evaluation of the Indirect Fire Team

A-42. The members of the indirect fire team must train and correctly execute their respective tasks to successfully complete any fire mission. However, only as a last resort should the fire mission be deleted from the evaluation. Evaluators should determine the reason why any fire mission fails to meet standards in order to determine where additional training is required. The indirect fire team should be given the opportunity to successfully complete the fire mission. This can be accomplished in the following ways:

- Allow the mission to continue if the detected error will still result in the rounds impacting within the safety limits. The team must train to accomplish the mission by finding and correcting any errors based on the round's impact. The appropriate evaluator should intervene only if the team prepares to fire incorrect data that is out of the safety area or when ammunition is constrained.
- Start the fire mission over. Although ammunition constraints during live-fire may not permit this, tasks can be repeated using devices or, less preferably, dry-fire.
- The evaluator corrects the error when the mission data would result in rounds fired out of the safety area. The FO evaluator at the observation post can change the CFF or correction to reflect proper procedures. The FDC evaluator may correct the improperly computed firing data while the mortar squad evaluator may correct improperly set data or a faulty sight picture.

Appendix B

Training Devices

The most efficient and direct method of teaching conduct of fire is by firing service ammunition under field conditions. However, ammunition training allowances and range limitations often restrict such training. When properly used, mortar training devices provide realistic training at reduced costs and at more accessible locations.

SECTION I. FULL-RANGE TRAINING CARTRIDGE, M931

The full-range training cartridge (FRTC) provides realistic training for all members of the indirect fire team at a reduced cost.

DESCRIPTION

B-1. The M931 FRTC is a non-dud producing 120-mm training cartridge used to simulate the M934 HE cartridge for M120 and M121 120-mm mortars.

B-2. The weight, charges, fuzing, and ballistic characteristics of the cartridge are similar to those of the HE cartridge. The M781 fuze for the M931 produces a flash, a bang, and a smoke signature that provide audio and visual feedback to the mortar crew and FO. The M931 has the following general characteristics:

- Maximum range: 7,200 meters.
- Minimum range: 200 meters.
- Maximum rate of fire: 16 rounds per minute (first minute).
- Sustained rate of fire: 4 rounds per minute.

B-3. The cartridge allows the entire mortar team—FO, FDC, and guns—to practice the actions required for a fire mission. These actions include—

- FO CFF and adjustment.
- FDC calculations and procedures.
- Gun crew preparation of the round, and the manipulation and firing of the mortar.

B-4. A major advantage of using the M931 FRTC is the elimination of the time required to retrieve and clean training devices such as the short-range training cartridge (SRTC). It also does not exceed 75 percent of the M934 cartridge's unit production cost.

B-5. A disadvantage of using the FRTC is the need to treat it as a regular service mortar cartridge when firing; it has the same range and firing restrictions as a service round.

B-6. The M931 consists of the following major components:

- Projectile body assembly.
- M233 propelling charges (with M47 propellant).
- M1005 ignition cartridge (with M44 propellant).
- M34 fin assembly.
- M781 point detonating practice fuze.

PROCEDURES

B-7. The procedures to fire the FRTC are the same as for the M934 service cartridge.

SECTION II. SHORT-RANGE TRAINING ROUND, M880

The M880 SRTR cartridge provides an economical means of realistically training personnel in all phases of mortar gunnery. The SRTR enables units to train in locations where mortar training facilities are limited or do not exist. Trainers should exercise imagination and ingenuity in developing training situations for employing the SRTR. This section provides the technical information required to employ the SRTR.

TRAINING WITH THE SHORT-RANGE TRAINING ROUND, M880

B-8. The M880 SRTR is a training round for the 81-mm mortar (M29 and M252) and the 120-mm mortar (when used with M303 and M313 81-mm subcaliber inserts). It can be fired, recovered, refurbished, and refired. When fired, the SRTR travels from 47 to 458 meters, according to its charge and elevation. Upon impact, the SRTR emits a flash, a bang, and smoke discharge, but no fragmentation.

TRAINING

B-9. The SRTR is effective for training all elements of the indirect fire team. It provides the FO with an audio and visual signal by which he can spot rounds and make adjustments. The FDC computes data received from the FO, who observes the impact of the SRTR on a 1:10 scaled range. The gunner places data obtained from the FDC on the mortar and the assistant gunner drops an SRTR down the barrel. The entire indirect fire team functions the same as if they were firing service ammunition with one exception—the FO observes the SRTR impact on a 1:10 scaled range instead of the service ammunition at a normal distance in an impact area.

CHARACTERISTICS

B-10. The characteristics of the SRTR are as follows:

- Overall length: 14.5 inches.
- Firing weight: 6.84 pounds.
- Maximum range: 458 meters.
- Minimum range: 47 meters.

NOTE: The 1:10 scale is based on 81-mm 300-series ammunition.

ADVANTAGES

B-11. The SRTR is used with all 81-mm mortars and 120-mm mortars (when used with M303 and M313 81-mm subcaliber inserts). It also accommodates prescribed crew drill procedures, and it can be used by both HBCT and IBCT elements. The SRTR has the following advantages:

- Can be fired in training areas where firing service ammunition is prohibited.
- Saves time by eliminating long-distance travel to suitable mortar ranges.
- Saves in the cost of firing service ammunition.
- Requires only a brief period of time for personnel to learn proper operation and maintenance.
- Allows the indirect fire team to use the same procedures required to fire service ammunition, excluding appropriate charge and fuze settings.
- Uses all of the equipment required to fire service ammunition.

RANGE

B-12. A scale of 1:10 is used to relate the range and deviation between the SRTR projectile and the standard 81-mm service projectile. The minimum range requirement for firing, through charge 3, is an area 700 to 900 meters in depth and 300 meters in width. This is necessary to accommodate the desired number of targets and provide a maneuver area to operate in. When using 81-mm mortars, the mortars

can be no closer than 4 meters apart, but can be as far apart as the range permits (check with the local range control regulations). The range must be cleared of all unexploded ammunition, concrete, and steel objects (Figure B-1).

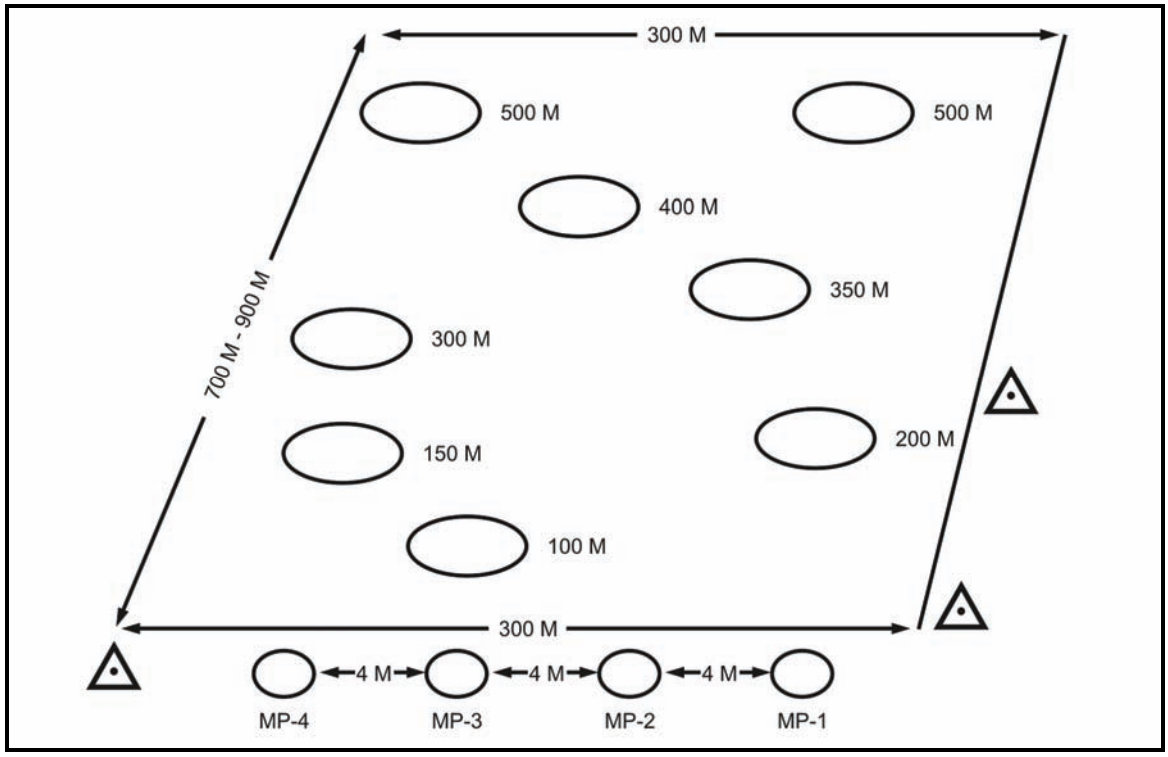

Figure B-1. Scaled range for short-range training round, M880.

COMPONENTS

B-13. The SRTR consists of eight major components (Figure B-2).

- Fuze, point detonating M775.
- Projectile body.
- Obturator band.
- Plastic charge plugs.
- Dud plugs.
- Fin assembly.
- Ignition cartridge, M987.
- Breech plug assembly.

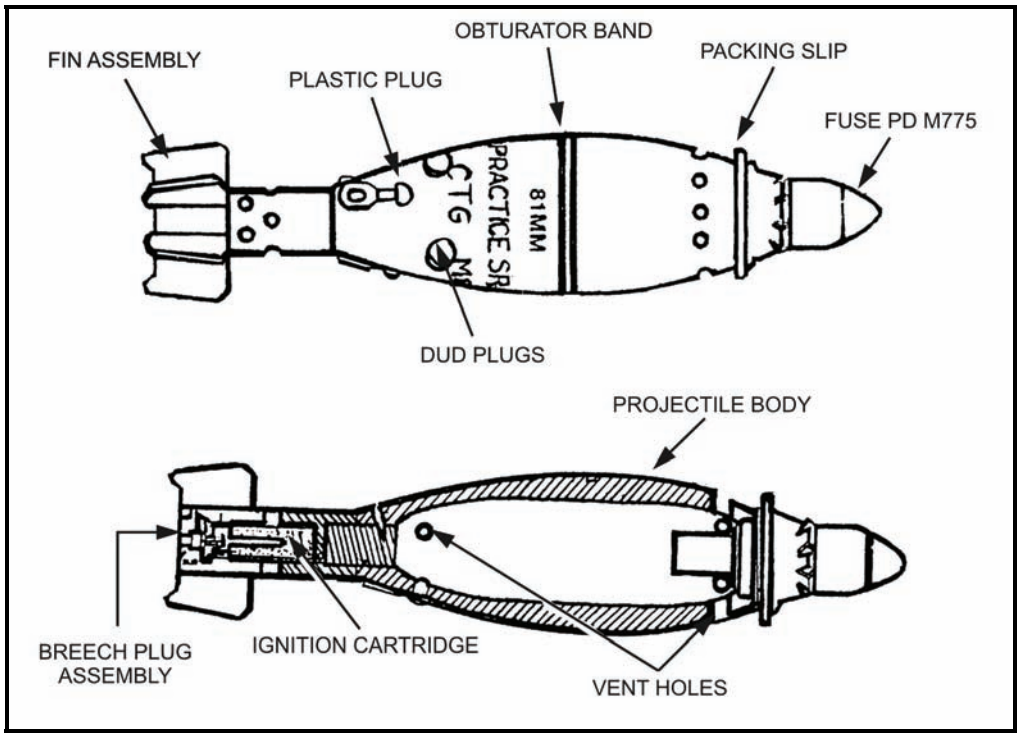

Figure B-2. Short-range training round, M880—practice round.

PROJECTILE BODY

B-14. The projectile body is made from cast iron and is machined to accept the M775 fuze, the tail fin, three charge plugs, three dud plugs, and the obturator band. It is painted blue with white lettering and one brown band to identify it as a practice round. The charge and dud plugs are fitted into holes drilled in the base of the projectile body. The obturator band is plastic and shaped like a split ring so that it will expand to fit over the projectile body and will seat into the band groove. The M775 fuze assembly includes a pyrotechnic spotting cartridge, which is retained in the fuze body by a threaded aluminum cup. This assembly is threaded into the nose of the projectile body.

FUZE, M775

B-15. The M775 fuze replicates the M734 multioption fuze used with service ammunition. Even though the M775 has four fuze settings for ammunition bearer training, it will only function upon impact. The tail fin assembly is threaded onto the stud at the base of the projectile body. Inside the tail fin is the propellant cartridge, which is a primed 12-gauge shotgun shell casing loaded with a double base propellant. The breech plug/firing pin is threaded into the rear of the tail fin and retains the propellant cartridge in the fin cavity.

PREPARATION

B-16. The M880 is issued ready to fire. When the round is unpacked, ensure the following:

- No red is showing at the top of the fuze.
- The packing clip is in place.
- The obturator band is present and flush with the body.
- The three plastic charge plugs are seated in the body.
- The three dud plugs are seated in the body.
- The ignition cartridge is inside the fin assembly.
- The breech plug is seated in the fin assembly.

WARNINGS

If any red can be seen above the fuze windshield, place the fuze in the dud pit and dispose of the fuze in accordance with the unit SOP.

If the packing clip is loose, attempt to place the packing clip back into the fuze. If it will not go back into the fuze, place the fuze into the dud pit and dispose of the fuze in accordance with the unit SOP.

Inspect the breech plug firing pin for freedom of movement. If it does not move freely, a misfire could occur or premature ignition of the ignition cartridge could take place when assembling the round.

B-17. To prepare a newly issued round for firing, set the desired charge by pulling one of the plastic charge plugs from the body of the round. Set the desired fuze setting by rotating the multioption fuze clockwise or counterclockwise until the desired fuze setting is lined up with the notch on the body of the round. Present the round to the squad leader for his inspection. When the assistant gunner is ready to fire the round, pull the packing clip from the round and hand it to him.

WARNING

Do not pull the packing clip from the round until the assistant gunner is ready to fire the round.

NOTE: The fuze setting is for training only and will not affect the functioning of the fuze.

B-18. Charge settings for the round are as follows:

- Charge 0—pull all the plastic charge plugs from the body.
- Charge 1—pull two of the plastic charge plugs from the body.
- Charge 2—pull one of the plastic charge plugs from the body.
- Charge 3—do not pull any of the plastic charge plugs from the body.

REFURBISH THE ROUND

B-19. To refurbish a previously fired round, ensure that the round is clean. All portholes must be free of dirt to allow the gas to escape, and all of the threads must be clean.

(1) Inspect the refurbishing kit to ensure that all equipment is present.
- Three plastic charge plugs.
- One obturator band.
- One M987 ignition cartridge.
- One breech plug.
- One M775 point detonating fuze.
- Three dud plugs.

(2) Assemble the round as follows:
- Install the three plastic plugs with the tangs pointed to the rear of the projectile body.
- Install the three dud plugs.
- Secure the fin assembly onto the projectile body hand-tight.
- Install the obturator band onto the projectile body.

CAUTION

If the obturator band does not seat flush or below the surface of the projectile body, send the body back to the maintenance table for further cleaning. If the obturator band still does not seat flush, the body must be disposed of.

- Install the fuze assembly hand-tight and flush with the top of the round.
- With the round laying horizontally on the table, install the M987 ignition cartridge into the tail fin assembly.

WARNING

Do not force the ignition cartridge into the tail fin assembly.

- Install the breech plug by hand and use the breech plug wrench to secure the breech plug hand-tight.

(3) Place the round back into its canister until it is ready to be fired.

NOTE: Do not refurbish the M880 round if it will not be fired that same day.

(4) To fire the round, follow the same procedures as if the round was newly issued.

CLEAN AND SERVICE THE ROUND

B-20. Use the following procedures to clean and service the SRTR.

(1) Fill two trash cans with water and leave another trash can empty.

(2) Dip the spent M880 into the first water bucket and scrub off the heavy dirt with a wire brush.

(3) Place the M880 round on the work table and secure the projectile body with the strap wrench.

(4) Remove the fuze (if necessary, use the long handle pliers), check to see that it was detonated, and discard.

WARNING

When the fuze is removed from the body, it must be inspected to ensure that it has detonated by inspecting the coin to see if it is missing.

(5) Using the breech plug wrench, unscrew the breech plug and discard.

(6) Using the fin wrench, unscrew the fin assembly from the projectile body.

(7) Place the tail fin assembly upright on the cartridge block, place the punch into the tail fin assembly, strike the punch with the ball peen hammer, and drive out the spent ignition cartridge. Discard the spent ignition cartridge.

(8) Place the tail fin assembly into the second wash bucket and clean it with a wire brush for the final cleaning. Ensure that all dirt and residue are removed from the round.

(9) Remove and discard all remaining plastic plugs and the obturator band from the projectile body.

(10) Place the projectile body into the second wash bucket and remove all dirt and residue. Take the M16 bore brush and thoroughly clean the vent holes and the thread.

(11) With a clean, dry rag, dry both components of the M880. Ensure no dirt or residue is present on the projectile body and tail fin assembly.

(12) Examine the M880 for cracks and any type of damage that may prevent the projectile from being refired. If there is evidence of cracks or some type of damage, discard the entire projectile body and tail fin assembly.

(13) If the M880 is not going to be fired the same day, lightly oil the projectile body and tail fin assembly. Screw the tail fin assembly back on the body and store it in its canister.

NOTE: The M880 must be recovered, cleaned, and serviced within 24 hours after it is fired.

RECOVERY PROCEDURES

B-21. Perform the following to recover a previously fired M880 round from downrange.

WARNING

Failure to follow the proper recovery procedures may result in personal injury.

(1) Ensure the range is closed and all weapon systems have ceased firing.

(2) Issue a shovel, a grappling hook, heavy duty leather work gloves, and an ammunition box to the assistants.

(3) Walk down range with the assistants and locate the M880 round.

(4) Pick up the round and verify that the round has functioned by observing that all of the dud plugs on the body are missing. Have a second Soldier verify that all of the dud plugs are missing.

WARNING

When picking up the M880, ensure that your hand and fingers are not covering the vent holes.

(5) If all of the dud plugs are missing, place the round in the ammunition box.

WARNING

If any of the dud plugs are present and the fuze has not functioned, place the round in a marked pit and follow the defuzing procedures outlined in paragraph B-22.

NOTE: Digging the round out with the shovel may be necessary. The grappling hook may also be used to assist in recovering the round.

(6) Ensure that each hole left by the M880 round is filled.

(7) Once the M880 rounds have been recovered, transport them to the maintenance table.

DEFUZE A DUD ROUND

B-22. A dud M880 round may be defuzed when first located or at the end of that day's firing as long as it is recovered within 24 hours after it has been fired. To defuse a dud M880 round—

(1) Set the defusing device (boom box) on the platform with the holes facing downrange and away from the troops. Pull out the four retaining pins that secure the top portion of the boom box, and then pull the top off the base of the boom box.

(2) Turn the round until the packing clip portion of the round is facing upward.

(3) With the chisel over the fuze, secure the top portion of the boom box to the base, and then attach the four retaining pins.

(4) Kneeling on the opposite side of the holes on the boom box, strike the chisel with the 4-pound hammer until the chisel moves freely from the base of the boom box to the top of the boom box.

WARNINGS

All personnel must be on the solid side of the boom box before the chisel is struck with the hammer.

When defuzing an M880 round, ear plugs and goggles must be worn.

(5) Remove the cover of the boom box and inspect the fuze to verify that the spotting charge has functioned.

WARNING

If the spotting charge has not functioned or the fuze has pulled away from the thread well, transport it to the dud pit and dispose of it in accordance with the unit SOP.

(6) Remove the M880 round from the boom box and return the cartridge to the firing line for cleaning.

PARTS

B-23. The equipment shown in Table B-1 is available.

Table B-1. Supply data for short-range training round, M880.

DESCRIPTION	NATIONAL STOCK NO.	PART NO.	DODIC NO.
Cartridge, 81-mm Practice: M880	1315-01-216-7070		1315-C876
Refurbishment kit, M80	1315-01-219-3936	19200	1315-C045

TRAINING CONSIDERATIONS

B-24. SRTR training enables the unit commander to observe the actions of the indirect fire team and the tasks being performed by the indirect fire team. This enhances the ability of the commander to evaluate the proficiency of all elements of the training, to identify and isolate problems, and to begin corrective training. All members of the team can view the overall operation to understand each member's part.

B-25. The time used for preparation determines the benefits gained from training with the SRTR. Three steps must be accomplished before training begins:

(1) Build a scaled firing range (permanent, semi-permanent, or temporary).
(2) Construct a map of the firing range.
(3) Train the personnel with the SRTR. Personnel should be trained in the recovery, refurbishment, and maintenance of the M880 before range firing begins.

B-26. Gunners should not be allowed to observe the impact of the SRTR, unless firing a direct-lay mission. Normally, mortars are mounted in a defilade position so that mask exists between the impact area and the firing position. If mask does not exist, using a referred deflection of 0700 when firing is recommended.

B-27. When positioning 81-mm mortars, the lateral distance between the center of each baseplate should have a minimum distance of 4 meters (40 meters when firing service ammunition, 1:10 scale for the SRTR = 4 meters).

B-28. The SRTR can also be fired from the 120-mm mortar using the M303 81-mm subcaliber insert (see section III) and the M313 81-mm subcaliber insert (see section IV). When positioning 120-mm mortars, the lateral distance between the center of each baseplate should be a minimum of 6 meters (60 meters when firing service ammunition, 1:10 scale for the SRTR = 6 meters).

CONSTRUCTION OF A SCALED MAP

B-29. The range limitations associated with the M880 SRTR make a standard 1:50,000-scale military map difficult to use. Therefore, a new map 1/10 the size (1:5,000) must be constructed (Figure B-3) using the following procedures.

(1) Use a blank sheet of paper to draw grid squares the same size as the 1:50,000-scale map and renumber them based on 100 meters per square.

(2) Determine the 8-digit grid coordinates to the mortar position on a 1:50,000-scale military map and convert it to a 1:5,000 scale (Figure B-3).

NOTE: The first number of a grid coordinate is the 10,000-meter designator; the second number is the 1,000-meter designator; the third number is the 100-meter designator; and the fourth number is the 10-meter designator.

- To make a 1:5,000-scale map, drop the 10,000-meter designator and use the 1,000-meter designator as the first number for each grid. For example, a mortar location of 07368980 becomes 736980. The 7 and the 9 will precede each grid location since they identify the 1,000-meter increments. To make an 8-digit grid from this 6-digit grid, add a 0 at the end of the easting and northing grid location. For example, the mortar grid becomes 73609800. The last 0 is the 1-meter designator.
- Before constructing the 1:5,000-scale map, determine the direction of fire from the mortar position to the RP. (Surveying a point on the range should be done at least one day before training. If a point on the range has already been surveyed, it can be used to make the map.) For example, if the direction of fire is southeast, the mortar position would be in the northwest corner of the grid sheet. Using the example grid coordinates, the most westerly grid line would be 73 and the second most northerly grid line would be 98. Number the rest of the grid lines accordingly.

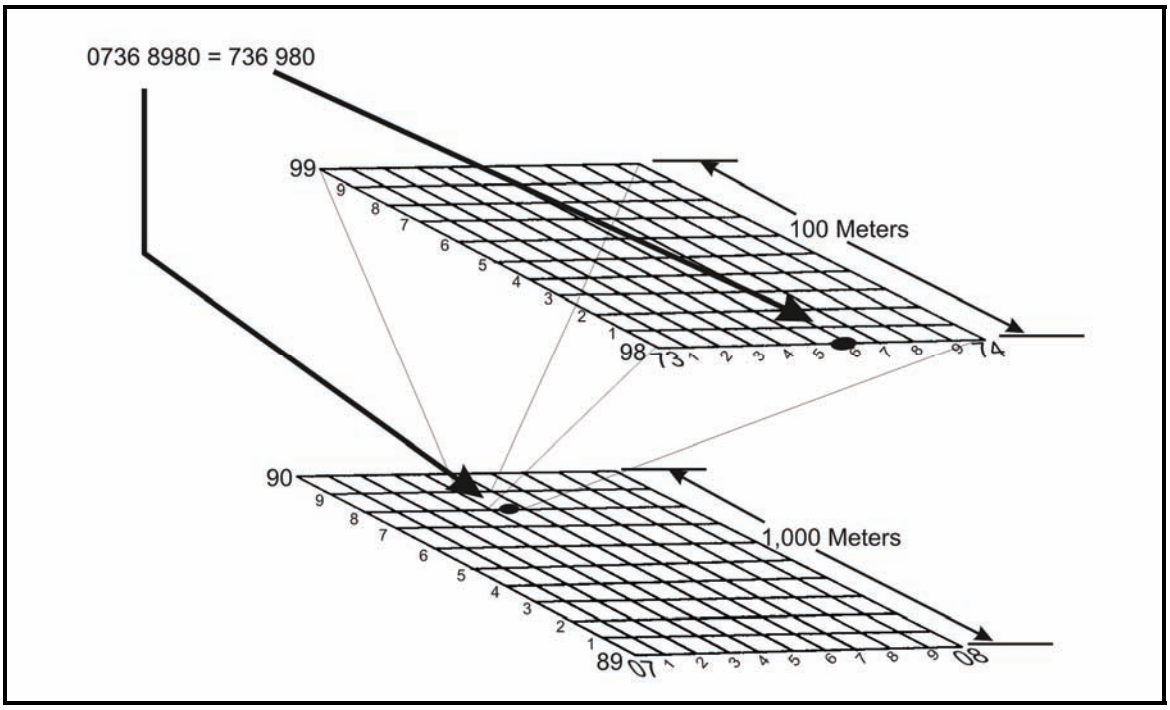

Figure B-3. Converting 1:50,000 grid to 1:5,000 grid.

(3) To plot the mortar position on the 1:5,000-scale map, use the same protractor that is used for the 1:50,000-scale map, but instead of the protractor measuring 1,000 meters, it will measure 100 meters.

(4) To determine the direction of fire, place a target downrange, set up the M2 aiming circle at the base gun position, and measure an azimuth to the target. To accurately plot targets on the map, measure the distance by pace count from the basepiece to the target and then plot it on the map. This procedure allows the creation of a surveyed firing chart. The FO's location

can be plotted in the same manner. After all plotting is done, give a copy of the map to the FO (Figure B-4). He can call for fire using this map the same as if firing service ammunition.

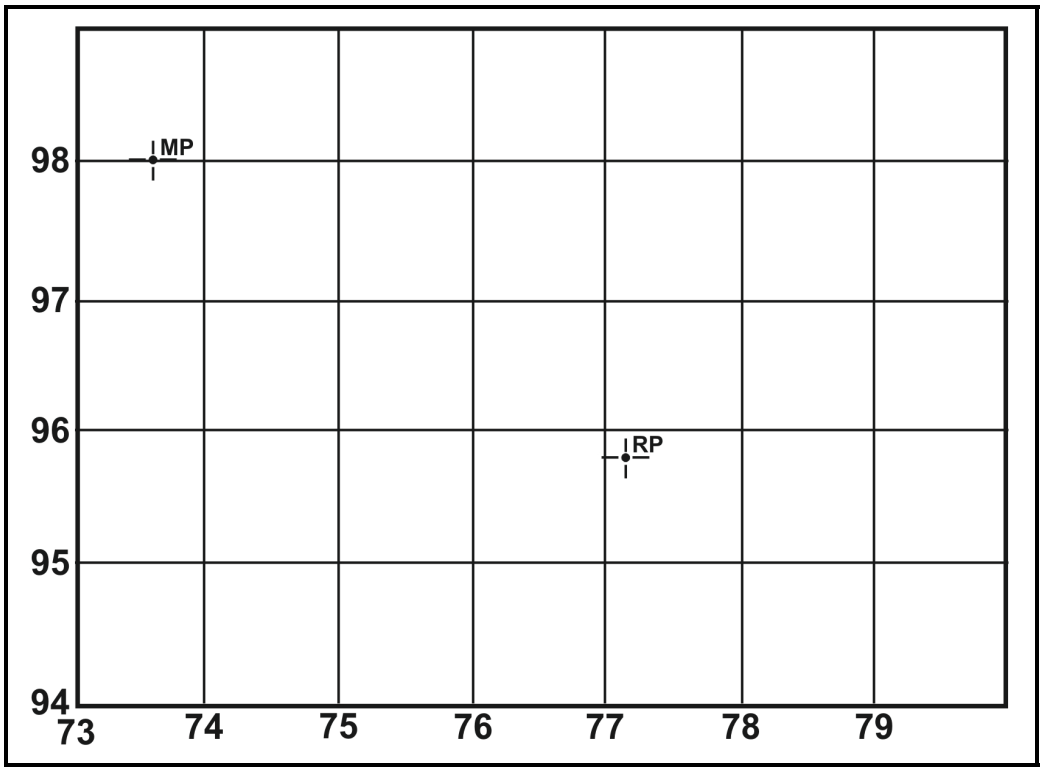

Figure B-4. Plotting targets on the 1:5,000-scale map.

(5) Before putting the map on the M16 plotting board, determine the grid intersection to represent the pivot point in the same manner as if firing service ammunition.

- Place the grid system on the plotting board the same as if firing service ammunition. Number every other black line. Every small green square equals 5 meters and every black square equals 50 meters.
- Place the mortar position and target on the plotting board the same as if firing service ammunition. The grids plotted are to the nearest 1 meter instead of 10 meters.

(6) To determine the mounting azimuth, line up the mortar position and the RP. Read the azimuth on the azimuth scale at the top of the plotting board. Round off the azimuth to the nearest 50 mils, and superimpose this azimuth over the referred deflection. Number the azimuth scale every hundred mils using the LARS rule (Figure B-5).

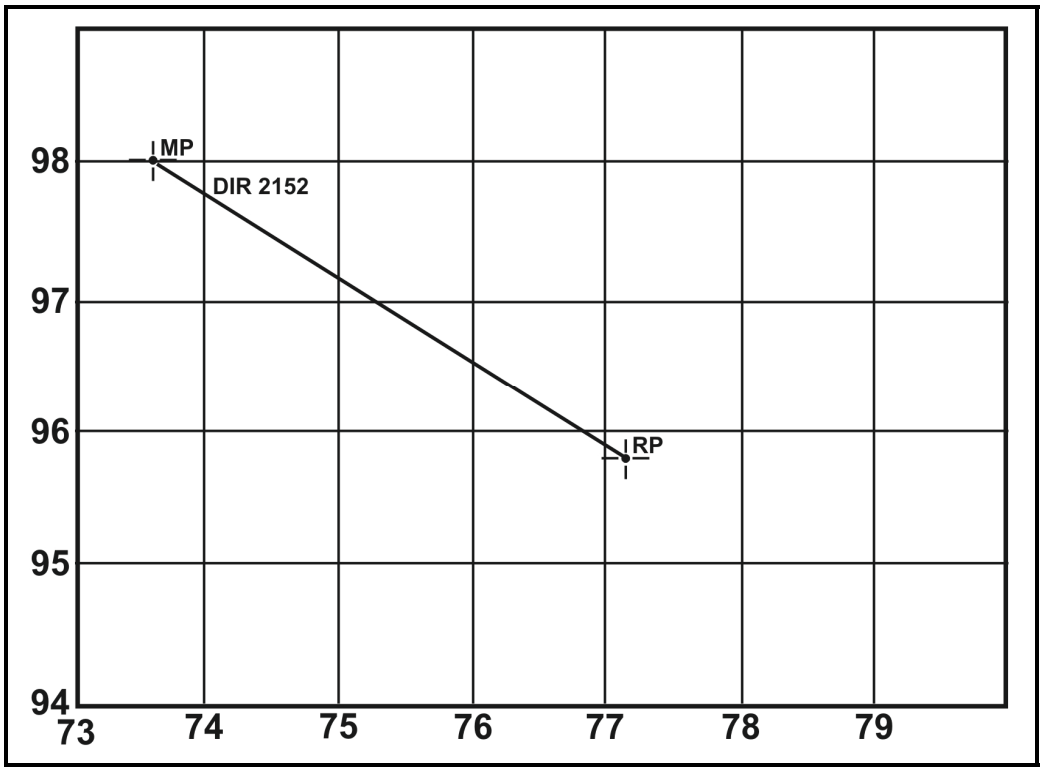

Figure B-5. Determining direction from mortar position to the registration point.

(7) When firing the M880 SRTR, range control must know exactly where the firing position is. The 1:50,000-scale grid must be annotated on DA Form 2188-R, labeled, and placed in the battle position (BP) box (Figure B-6).

DATA SHEET

For use of this form, see FM 23-91. The proponent agency is TRADOC.

SETUP		WEAPON DATA		FO DATA		
TIME OUT:	UNIT: E Co 2/29 IN	WPN:	WPN:	FO	ALT	GND
TGT PRFX: AB	81 mm CAR: ☐ YES	DIR:	DIR:			
TGT NO: 0100-0150	(M880) ☒ NO	DIS:	DIS:			
ALARM: ☐ ON ☐ OFF	BP: 1/50,000THS					
MIN E:	0736 8980	WPN:	WPN:			
MIN N:	E: 7360	DIR:	DIR:			
GD: ☐ E ☐ W	N: 9800	DIS:	DIS:			
LAT: ☐ + ☐ −	ALT:					
LISTEN: ☐ ON ☐ OFF	AZ: 2152/2150	WPN:	WPN:			
BIT RATE:	DEF: 2800	DIR:	DIR:			
KEY TONE:	ELE:	DIS:	DIS:			
BLK: ☐ SNG ☐ DBL						
OWNER ID:						

AMMUNITION DATA

TEMPERATURE: _____ TYPE: ☐ HE ☐ WP ☐ ILL ☐ CS ☒ TNG (M880)

LOT NUMBER									
WEIGHT									
ON HAND									
RECEIVED									

Figure B-6. Example completed DA Form 2188-R.

(8) DA Form 2399 is also altered. For safety, as well as range control's information, "M880" should be placed in the "SHELL AND FUZE" spaces in both the FDC ORDER and INITIAL FIRE COMMAND (Figure B-7).

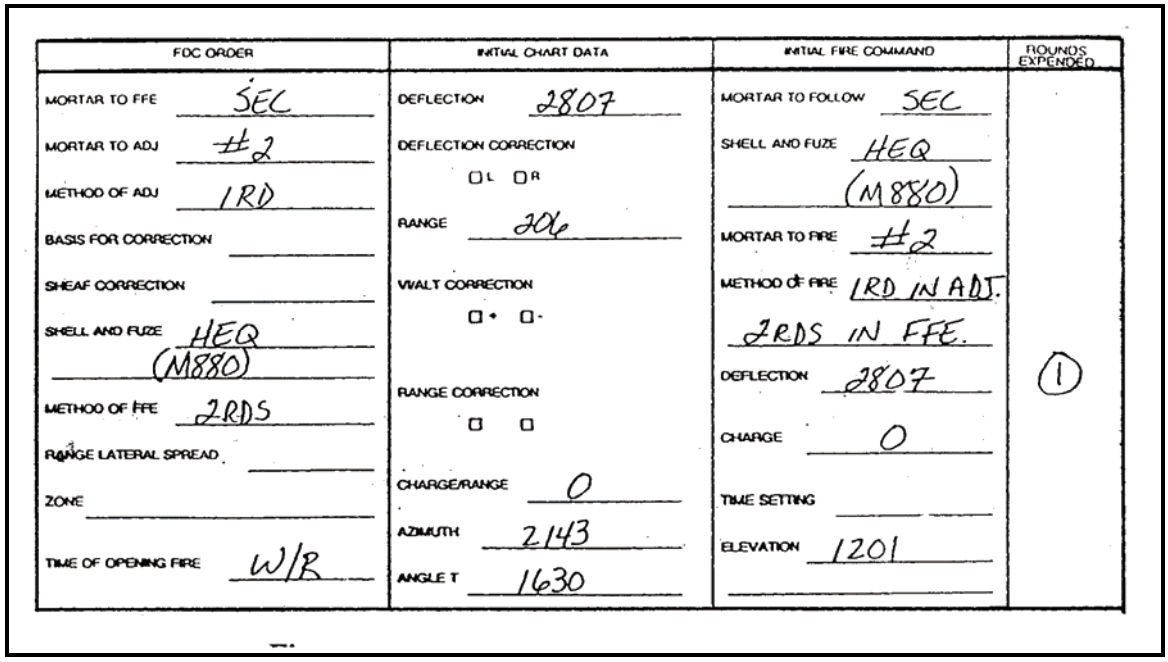

Figure B-7. Example completed DA Form 2399 showing SHELL AND FUZE entries in the FDC ORDER and INITIAL FIRE COMMAND columns.

SAFETY

B-30. Although the SRTR is safe to handle and fire, the following safety precautions must be enforced:

WARNING

The SRTR is inert and can be stored and handled as a weapon until it is loaded with the refurbishment kit at which time it will be handled as a live mortar round. When loaded and ready to fire, all safety precautions used during handling of service ammunition are observed.

- The SRTR refurbishment kit contains a propellant and smoke charge, and is always stored and handled as live ammunition.
- Practice ammunition is never fired over the heads of troops.
- Personnel never go forward of the firing line until a cease fire has been called by the range OIC or safety officer.

NOTE: Duds are disposed of as prescribed in paragraph B-22.

MALFUNCTIONS AND REMOVAL OF A MISFIRE

B-31. After failure to fire, misfire removal procedures are followed to remove the round from the weapon. Misfire procedures for live rounds also apply when firing the SRTR. (See Chapter 3, paragraphs 3-37 to 3-40 for a detailed discussion of malfunctions.)

B-32. If the primer cap of the SRTR is dented, the whole round is placed in the dud pit for disposal in accordance with the local SOP.

B-33. If the primer is not dented, the round can be refired upon determination of the cause of the misfire.

SECTION III. SUBCALIBER INSERT, M303

The M303 subcaliber insert (Figure B-8) provides realistic live-fire training at a relatively low cost to the 120-mm indirect fire team while firing 81-mm mortar ammunition. It uses 300-series HE, WP, and ILLUM ammunition. Currently, the FDC uses the M16 plotting board for plotting.

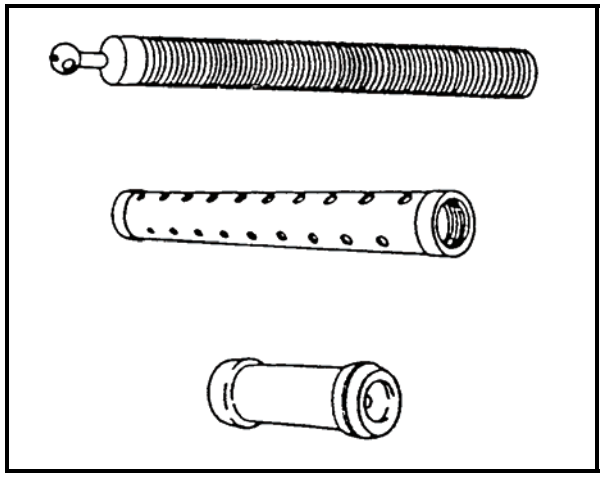

Figure B-8. Subcaliber insert, M303.

CHARACTERISTICS

B-34. The cannon is an M29A1 cannon assembly that has been refurbished. This is the only M29 cannon approved to use the M303 subcaliber insert. The cannon is 51 inches long and weighs 28 pounds. It has a smooth bore with one circular cooling ring and a removable firing pin.

B-35. The insert sleeve is 42 inches long and weighs 5.9 pounds. It is tubular shaped with cooling holes. It has a threaded end on top and a smooth end on the bottom. The sleeve slides over the cannon and is threaded onto the cannon until it is flush with the breech cap. It is held in place by three hex screws on the muzzle end. Approximately 2 inches of the M29 cannon will be showing at the muzzle end.

NOTE: After every fire mission, the hex screws on the upper sleeve ring should be checked for tightness to ensure the interior of the 120-mm cannon is not damaged.

B-36. The filler block is 15.9 inches long and weighs 17 pounds. It is tubular shaped with the top and bottom the same diameter as the interior of the 120-mm cannon. The top and bottom have a concave slope with a threaded hole, which is used in the removal of the filler block.

B-37. The M303 subcaliber insert comes with a filler block adapter, a 0.0625-inch hex wrench, and a firing pin wrench.

B-38. The 300-series ammunition has a minimum range of 73 meters and a maximum range of 4,789 meters. It can be fired at a sustained rate of three (charge 8) or five (charge 6) rounds per minute. It can be fired indefinitely at a periodic rate of fire. The 300-series ammunition has a maximum rate of fire of 12 (charge 8) for two minutes and 12 (charge 6) for five minutes.

MAINTENANCE

B-39. Maintenance must be performed on the M303 subcaliber insert before, during, and after firing. Use the following procedures to perform this maintenance. (For more detail, see TM 9-1015-254-13&P.)

BEFORE

Cannon

B-40. Update the DA Form 2408-4 to reflect the day's firing. Ensure that all standards for bore scope and pullover gauging have not been exceeded (within the past 180 days).

B-41. Check the M120/M121 mortar for cracks, broken welds, rust, and missing or damaged parts.

B-42. Check the M29A1 cannon for foreign matter in the barrel, then wipe dry. Clean and lubricate the exterior surface. Check for bulges, dents, and visible cracks. Check for evidence of gas leakage (grayish color) around the firing pin located in the base of the spherical projectile.

B-43. Check the insert sleeve for cracks, broken welds, rust, and missing or damaged parts. Check that the insert sleeve assembles onto the cannon assembly, can be secured with set screws, and is free of any nicks and burrs.

Filler Block

B-44. Check the filler block for cracks, broken welds, rust, and nicks or burrs.

B-45. Check that the filler block fits with breech plug of the M29A1 cannon, seats in the base of the 120-mm bore, and can be employed or retrieved using the adapter tool.

DURING

B-46. Check the bore after approximately every 50 rounds for bulges, dents, and visible cracks. Check for evidence of gas leakage around the firing pin (grayish discoloration).

B-47. Dry swab the cannon bore after firing every 10 rounds or after every end of mission (EOD).

AFTER

B-48. Check DA Form 2408-4 to ensure it reflects the day's firing.

B-49. Ensure rifle bore cleaning compound (RBC) is used to thoroughly clean the cannon bore after firing and for two consecutive days thereafter. Be sure to wipe dry and lubricate with general purpose lubricant (GPL) after each cleaning.

NOTE: For nonfiring periods, clean and lubricate the cannon on a weekly basis.

B-50. Check the insert sleeve for cracks, broken welds, rust, nicks, burrs, and damaged parts.

B-51. Check the filler block for cracks, broken welds, rust, nicks, burrs, and damaged threads.

B-52. Intervals are based on usual conditions. For unusual operating conditions, lubricate more often. When the weapon is not being used, the intervals may be extended if proper lubrication procedures have been followed. Clean the cannon bore weekly with RBC, and lubricate the cannon, firing pin, insert sleeve, and filler block weekly with GPL.

WARNING

Dry cleaning solvent is flammable. Do not clean parts near an open flame or in a smoking area. Dry cleaning solvent evaporates quickly and has a drying effect on the skin. When used without protective gloves, this chemical may cause irritation to, or cracking of, the skin.

NOTE: Before firing, dry swab the cannon bore of the M29A1 and the 120-mm cannon. Wipe dry the exterior of all components of the subcaliber insert.

MISFIRE PROCEDURES

B-53. See TM 9-1015-254-13&P for M303 misfire procedures.

SECTION IV. SUBCALIBER TRAINER, M313

The M313 subcaliber trainer (Figure B-9) allows the 120-mm fire team to conduct low cost, realistic live-fire training. This trainer fires 81-mm mortar ammunition and uses 300- and 800-series HE, smoke, and ILLUM ammunition and 300-series WP. When using this trainer, the FDC plots targets using an M16 plotting board.

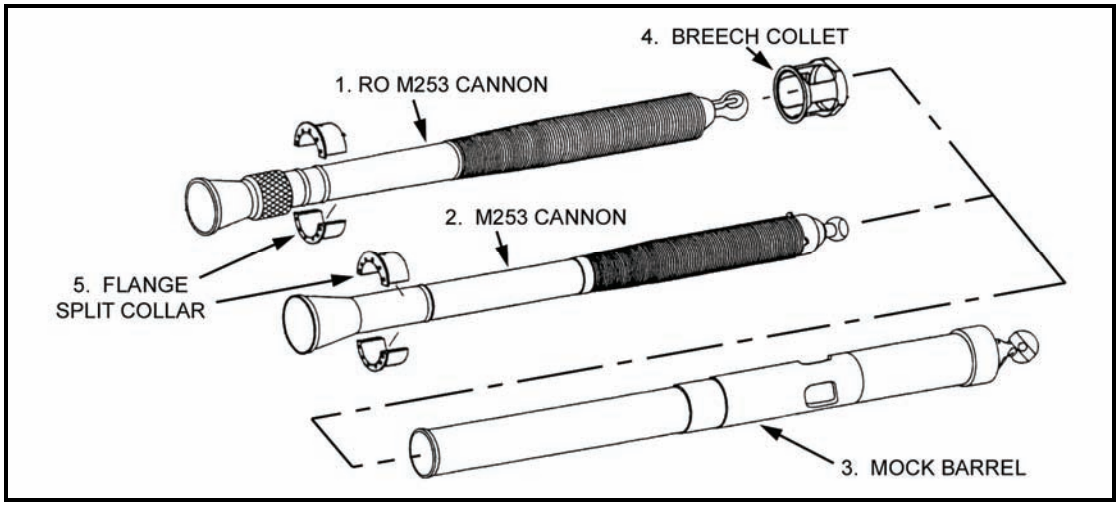

Figure B-9. Subcaliber trainer, M313.

CHARACTERISTICS

B-54. The M313 120-mm subcaliber trainer consists of an 81-mm mortar cannon, a 120-mm mock barrel, a breech collet, and a flange split collar. This paragraph describes the characteristics of the M313 subcaliber trainer and its components.

CANNON TUBE

B-55. Two types of 81-mm cannon tubes are authorized for use with the M313: the RO M253 (Figure B-9, 1) and the M253 cannon (Figure B-9, 2) assemblies. The RO M253 cannon is 55 inches long and weighs 35 pounds. The M253 cannon is 55 inches long and weighs 29.5 pounds. Both types have a smooth bore with a circular cooling ring and a removable firing pin.

MOCK BARREL

B-56. The mock barrel (Figure B-9, 3) replaces the M298 cannon tube in the 120-mm mortar system. The barrel is 77.7 inches long and weighs 84 pounds.

BREECH COLLET

B-57. Exclusive to the RO M253 cannon, the breech collet (Figure B-9, 4) centers and stabilizes the tube in the mock barrel. The breech collet is 7 inches long and weighs 5 pounds.

FLANGE SPLIT COLLAR

B-58. The flange split collar (Figure B-9, 5) is used with both cannons to center the cannon in the mock barrel.

ASSEMBLY

B-59. The mock barrel is mounted on a 120-mm mortar baseplate and bipod assembly. The breech collet is installed in the mock barrel (RO M253 only). The flange split collar is placed around the muzzle of the 81-mm cannon, and the cannon is lowered into the mock barrel until it is seated on the mortar filler block. Ensure that the breech cap of the cannon tube seats correctly in the concave breech surface of the mortar filler block. The assistant gunner dry swabs the bore of the 81-mm mortar cannon; the gunner installs the sightunit and levels the mortar; and the crew awaits a fire mission.

OTHER COMPONENTS

B-60. The M313 subcaliber trainer comes with a tool bag, two cleaning brushes, a wire mesh cleaning pad, an M25 fuze setter, a pair of gloves, a head section cleaning tool, a firing pin, a copy of TM 9-1015-255-13&P, a firing pin wrench, an M18 fuze wrench, a 1-3/4 inch fuze setting wrench, and a pipe strap wrench.

MINIMUM AND MAXIMUM RANGE

B-61. The 300-series ammunition has a minimum range of 73 meters and a maximum range of 4,789 meters. It can be fired indefinitely at a sustained rate of fire of 3 (charge 8), 5 (charge 6), or 4 (charge 4 with the M374A3/M375A3) rounds per minute. The 300-series ammunition has a maximum rate of fire of 12 (charge 8) rounds per minute for two minutes and 12 (charge 6) rounds per minute for five minutes.

B-62. The 800-series ammunition has a maximum range of 5,608 meters. It can be fired at a sustained rate of fire of 15 rounds per minute indefinitely and has a maximum rate of fire of 30 rounds per minute for two minutes.

MAINTENANCE

B-63. Preventive maintenance must be performed on the M313 subcaliber trainer before, during, and after firing to ensure that the trainer is in good operating condition and ready for its primary mission. Use the following procedures to perform this maintenance. (For more detail, see TM 9-1015-255-13&P.)

BEFORE

Cannon

B-64. Before firing, dry swab the cannon bore of the mock barrel, and wipe dry the exterior of all components of the 81-mm subcaliber insert.

B-65. Review DA Form 2408-4 or DA Form 5988-E (Equipment Inspection Maintenance Worksheet [EGA]) to ensure that it reflects previous firings. Before firing the cannon, ensure that it has been bore scoped and pullover gauged within the past 180 days, and be sure that these procedures are performed every 180 days during the firing period. Notify field-level maintenance if bore scoping and pullover gauging are needed.

B-66. Check for cracks, broken welds, rust, and missing, loose, or damaged parts.

B-67. Check the cannon/BAD for foreign matter in the barrel, and then wipe dry. Clean and lubricate the exterior surface. Check for bulges, broken welds, dents, rust, and visible cracks. Check for evidence of gas leakage (grayish discoloration) around the firing pin or breech cap.

Mock Barrel

B-68. Check for cracks, broken welds, rust, nicks, burrs, and missing or damaged parts.

Flange Split Collar

B-69. Check for cracks, rust, nicks, and burrs.

Breech Collet

B-70. Check for cracks, rust, nicks, and burrs.

NOTE: When firing subcaliber training rounds, bore scope the M313 every 100 rounds. Record your inspections using DA Form 2408-4 or DA Form 5988-E.

DURING

B-71. Remove the 81-mm mortar cannon from the mock barrel after every 50 rounds (approximately), and check for bulges, dents, and visible cracks. Check for evidence of gas leakage (grayish discoloration) around the firing pin or breech cap.

B-72. Dry swab the cannon bore after firing every 10 rounds (approximately) or at the end of every fire mission.

AFTER

Cannon

B-73. Update DA Form 2408-4 or DA Form 5988-E to reflect the day's firing. Have the weapon bore scoped once 5,000 rounds have been fired and every 500 rounds thereafter.

B-74. Check the cannon for bulges, dents, and visible cracks. Check for evidence of gas leakage (grayish discoloration) around the firing pin or breech cap.

B-75. Use RBC to thoroughly clean the cannon bore after firing and for two consecutive days thereafter. Once clean, wipe it dry and lightly coat it with GPL.

NOTE: For nonfiring periods, clean and lubricate the cannon weekly.

Mock Barrel

B-76. Check for cracks, broken welds, rust, nicks, burrs, and missing or damaged parts.

Flange Split Collar

B-77. Check for cracks, rust, nicks, and burrs.

Breech Collet

B-78. Check for cracks, rust, nicks, and burrs.

WARNING

1. Dry cleaning solvent is flammable. Do not clean parts near an open flame or in a smoking area.

2. Dry cleaning solvent evaporates quickly and has a drying effect on the skin. When used without protective gloves, this chemical may cause irritation to, or cracking of, the skin.

3. Cleaner, lubricant, and preservative (CLP) is not authorized for use on the M313 trainer.

MISFIRE PROCEDURES

B-79. See TM 9-1015-255-13&P for M313 misfire procedures.

This page intentionally left blank.

Glossary

AAR	after-action review
AC	alternating current
ACA	airspace coordination area
ACCP	Army Correspondence Course Program
ACU	Army combat uniform
ADR	address
AFATDS	Advanced Field Artillery Tactical Data System
AR	Army regulation
ARTEP	Army Training and Evaluation Program
ASP	ammunition supply point
AZ	azimuth
BAD	blast attenuator device
BIT	built-in test
BLTM	battalion-level training model
BNCOC	Basic Noncommissioned Officer Course
BP	battle position
CBRN	chemical, biological, radiological, nuclear
CFF	call for fire
CFL	coordinating fire line
CFX	command field exercise
CH	charge
CHN	channel
CI	commander's interface
CLP	cleaner, lubricant, and preservative
CMF	career management field
COMSEC	communications security
CONUS	continental United States
CPX	command post exercise
DA	Department of the Army
DAP	distant aiming point
DC	direct current
DD	driver's display
DEF	deflection
DLY	delay
DOF	direction of fire
DMD	digital messaging device
EDC	error detection and correction
EIDSA	Electronic Information Delivery System
EL	elevation
EOD	explosive ordnance disposal
FC	fires cell
FDC	fire direction center
FFE	fire for effect
FH	frequency hopping
FIST	fire support team
FLOT	forward line of own troops
FM	field manual
FO	forward observer

FOS	Forward Observer System
FP	firing point
FPF	final protective fire
FRTC	full-range training cartridge
FSCM	fire support coordination measure
FT	firing table
FTX	field training exercise
GD	gunner's display
G-M	grid-magnetic
GPL	general purpose lubricant
GPS	Global Positioning System
GT	gun-target
GUI	graphic user interface
HBCT	heavy brigade combat team
HE	high-explosive
HMMWV	high-mobility multipurpose wheeled vehicle
IBCT	infantry brigade combat team
ICCC	Infantry Career Captain's Course
ILLUM	illumination
IMLC	Infantry Mortar Leader Course
IMP	impact
IMU	inertial measurement unit
IBOLC	Infantry Basic Officer Leader's Course
IP	Internet protocol
IR	infrared
ITEP	Individual Training and Evaluation Program
LARS	left, add; right, subtract
LCD	liquid crystal display
LED	light-emitting diode
LFX	live-fire exercise
LWCMS	Lightweight Company Mortar System
MANCOC	Manuever Advanced Noncommissioned Officer Course
MAPEX	map exercise
MBC	mortar ballistics computer
MET	meteorological data
METL	mission-essential task list
METT-TC	mission, enemy, terrain and weather, troops and support available, time available, civil considerations
MFCS	Mortar Fire Control System
MILES	Multiple Integrated Laser Engagement System
mm	millimeter
MOC	method of control
MOF	method of fire
MOS	military occupational specialty
MQS	Military Qualification Standard
MT	mechanical time
MTO	message to observer
MTP	mission training plan
MTSQ	mechanical time superquick
NA	not applicable

NAD	net access delay
NATO	North Atlantic Treaty Organization
NCO	noncommissioned officer
NCOPD	noncommissioned officer professional development
NFA	no fire area
NiMh	nickel metal hydride
NSB	near-surface burst
OBSNUM	observer number
OIC	officer in charge
OpACK	operationally acknowledge
OPD	officer professional development
OPFOR	opposing force
OpRDY	operationally ready
OSUT	one-station unit training
OT	observer-target
PCC	Pre-Command Course
PD	point detonating; pointing device
PDA	power distribution assembly
PE_D	probable errors deflection
PE_R	probable errors range
PLGR	precision lightweight GPS receiver
PROX	proximity
PRN	printer
PRX	proximity (used on fuze settings)
PTM	plain text message
QWERTY	the most common keyboard layout on English language-typing computers and keyboards; takes its name from the first six letters in the keyboard's top row of letters
RTO	radio-telephone operator
RBC	rifle bore cleaning compound
RDX	cyclonite
RP	red phosphorus; reference point
RPO	range patrol officer
S3	battalion/brigade level plans, training, and operations office/officer
SDZ	surface danger zone
SEL	select
SINCGARS	Single Channel Ground and Airborne Radio System
SM	Soldier's manual
SOP	standing operating procedure
SQ	superquick
SRTC	short-range training cartridge
SRTR	short-range training round
STANAG	Standardized NATO Agreement
STP	Soldier's training publication
STX	situational training exercise

T&EO	training and evaluation outline
TCIM	tactical communication interface modem
TEC	Training Extension Course
TEWT	tactical exercise without troops
TG	trainer's guide
TM	technical manual
TNT	trinitrotoluene
TOE	table of organization and equipment
TP	training practice
TTP	tactics, techniques, and procedures
URN	unit reference number
U.S.	United States
USAREUR	U.S. Army Europe
V, v	volt
VMS	vehicle motion sensor
VT	variable time
WP	white phosphorus
WTT	warrior task test

References

DOCUMENTS NEEDED

These documents must be available to the intended users of this publication.

ARMY PUBLICATIONS

AR 385-63, *Range Safety {MCO 3570.1B}*. 19 May 2003.

ARTEP 7-90-Drill, *Battle Drills for the Infantry Mortar Platoon, Section, and Squad*. 26 July 2002.

ARTEP 7-90-MTP, *Mission Training Plan for the Infantry Mortar Platoon, Section, and Squad*. 1 April 2005.

DA Pamphlet 385-63, *Range Safety*. 10 April 2003.

FT 60-P-1, *Mortar, 60-mm: M224, Firing Cartridge, HE, M720; Cartridge, HE, M49A4; Cartridge, HE, XM888; Cartridge, TP, M50A3; Cartridge, WP, M302A1 and Cartridge, Illuminating M83A3*. 22 March 1980.

STP 7-11B1-SM-TG, *Soldier's Manual and Trainer's Guide, MOS 11B, Infantry, Skill Level 1*. 6 Aug 2004.

STP 7-11B24-SM-TG, *Soldier's Manual and Trainer's Guide, MOS 11B, Infantry, Skill Levels 2, 3, and 4*. 6 Aug 2004.

STP 7-11C14-SM-TG, *Soldier's Manual and Trainer's Guide, MOS 11C, Indirect Fire Infantryman, Skill Levels 1, 2, 3, and 4*. 6 Aug 2004.

TM 9-1010-223-10, *Operator's Manual for Lightweight Company Mortar, 60-mm: M224*. 15 September 1998.

TM 9-1015-249-10, *Operator's Manual for: Mortar, 81-mm, M252*. 30 October 1987.

TM 9-1015-250-10, *Operator's Manual for Mortar, 120mm: Towed M120 and Mortar, 120mm: Carrier-Mounted M121*. 19 August 1996.

TM 9-1015-254-13&P, *Operator's, Unit, and Direct Support Maintenance Manual with Repair Parts and Special Tools List for Mortar, Subcaliber Insert: M303*. 2 March 1994.

TM 9-1220-248-10, *Operator's Manual for Mortar Fire Control System, M95*. 31 October 2005.

TM 9-1290-262-10, *Operator's Manual for Aiming Circle, M2 W/E and M2A2 W/E*. 15 April 1981.

TM 9-1290-333-15, *Operator's, Organizational, Direct Support, General Support and Depot Maintenance Manual (Including Repair Parts and Special Tools List): Compass, Magnetic, Unmounted: M2*. 7 November 1963.

TM 9-1315-249-12&P, *Operator's and Unit Maintenance Manual (Including Repair Parts and Special Tools List) for 81-mm Mortar Training Device, 81-mm Sabot (Inert) M1 and 22-mm Sub-Caliber Practice Cartridges M744, M745, M746, and M747*. 1 September 1990.

TM 9-2350-277-10, *Operator's Manual for Carrier, Personnel, Full-Tracked, Armored, M113A3; Carrier, Command Post, Light Tracked, M577A3; Carrier, Smoke Generator, Full Tracked, M1059A3; Carrier, Mortar, 120-mm M121, Self Propelled, M1064A3; Carrier, Standardized Integrated Command Post System (SICPS) M1068A3; Carrier, Mechanized Smoke Obscurant M58*. 2 January 2001.

ARMY FORMS

DA Form 2188-R, *Data Sheet (LRA)*.

DA Form 2399-R, *Computer's Record (LRA)*.

DA Form 2408-4, *Weapon Record Data*.

DA Form 5964-R, *Gunner's Examination Scorecard–Mortars*.

DA Form 5988-E, *Equipment Inspection Maintenance Wroksheet (EGA)*.

READINGS RECOMMENDED

These sources contain relevant supplemental information.

FM 3-22.91, *Mortar Gunnery*. 18 January 2005.

FM 4-25.11, *First Aid {NTRP 4-02.1.1; AFMAN 44-163(I); MCRP 3-02G}*. 23 December 2002.

FM 6-30, *Tactics, Techniques, and Procedures for Observed Fire*. 16 July 1991 (to be republished as FM 3-09.30).
FM 7-0, *Training the Force*. 22 October 2002.
FM 7-1, *Battle Focused Training*. 15 September 2003.
FM 7-90, *Tactical Employment of Mortars*. 09 October 1992.
FM 25-4, *How to Conduct Training Exercises*. 10 September 1984.
FT 81-AR-2, *Firing Tables for Mortar, 81mm, M252, Firing Cartridge, HE, M821 Cartridge, HE, M889 Cartridge, RP, M819 Cartridge, Illum, M853A1 Cartridge, TP, M879 Cartridge, HE, M821A1 and M821A2 Cartridge, HE, M889A1 and Mortar, 81mm, M29A1 Mortar, 81mm, M252 Mortar, 120mm, M120 and M121 with 81mm, Insert Training Device Firing Cartridge, TP (SR), M880*. 1 June 1997.
TB 43-0250, *Ammunition Handling, Storage and Safety*. 1 March 2003.

INTERNET WEBSITES

U.S. Army Publishing Agency, http://www.army.mil/usapa
Reimer Doctrine and Training Digital Library, http://www.adtdl.army.mil

Index

NUMBERS

60-mm mortar, M224, 3-2 (illus)
  ammunition (*see also* ammunition), 3-16 to 3-22
    care and handling, 3-22 to 3-23
    cartridge preparation, 3-21 to 3-22
    classification and types of ammunition, 3-16 to 3-18
    fuzes, 3-19 to 3-21
  components, 3-2 to 3-5
    cannon assembly, M225 (*see also* cannon assembly), 3-3, 3-3 (illus)
    baseplate (*see also* baseplate)
      M7, 3-5, 3-5 (illus)
      M8, 3-5, 3-5 (illus)
    bipod assembly, M170 (*see also* bipod assembly), 3-3 to 3-4, 3-4 (illus)
  operation, 3-6 to 3-16
    carrying, 3-16
    deflection and elevation changes (*see also* deflection and elevation changes), 3-8 to 3-9, 3-9 (illus)
    dismounting (*see also* dismounting the mortar), 3-15 to 3-16
    malfunctions (*see also* malfunctions), 3-10 to 3-11
    misfire, removal (*see also* misfire, removal), 3-11 to 3-15
    mounting of the mortar (*see also* mounting of the mortar), 3-6 to 3-7
    premount checks (*see also* premount checks), 3-6
    referring the sight and realigning the aiming posts (*see also* referring the sight and realigning the aiming posts), 3-9 to 3-10, 3-10 (illus)
    safety checks before firing (*see also* safety checks before firing), 3-7 to 3-8
  squad and section organization and duties (*see also* squad and section duties and organization), 3-1
  tabulated data, 3-2, 3-2 (table)

81-mm mortar, M252 , 4-3 (illus)
  ammunition (*see also* ammunition), 4-16 to 4-27
    care and handling, 4-25 to 4-27, 4-26 (illus), 4-26 (illus)
    cartridge preparation, 4-24
    classification and types of ammunition, 4-16 to 4-21
    fuzes, 4-21 to 4-24
  components, 4-3 to 4-6
    baseplate, M3A1 (*see also* baseplate), 4-6, 4-6 (illus)
    cannon assembly, M253 (*see also* cannon assembly), 4-5, 4-5 (illus)
    mount, M177 (*see also* mount, M177), 4-5 to 4-6, 4-5 (illus)
  operation, 4-7 to 4-16
    deflection and elevation changes (*see also* deflection and elevation changes), 4-10 to 4-11
    dismounting (*see also* dismounting the mortar), 4-16
    malfunctions (*see also* malfunctions), 4-12
    misfire, removal (*see also* misfire, removal), 4-12 to 4-16, 4-13 (illus), 4-14 (illus), 4-15 (illus)
    mounting of the mortar (*see also* mounting of the mortar), 4-8 to 4-9, 4-9 (illus)
    premount checks (*see also* premount checks), 4-7 to 4-8, 4-8 (illus)
    referring the sight and realigning the aiming posts (*see also* referring the sight and realigning the aiming posts), 4-12
    safety checks before firing (*see also* safety checks before firing), 4-10
  squad and section organization and duties (*see also* squad and section duties and organization), 4-1 to 4-2, 4-2 (illus)
  tabulated data, 4-4, 4-4 (table)

120-mm mortars, M120 and M121, 5-3 (illus)
  ammunition (*see also* ammunition), 5-38 to 5-45
    care and handling, 5-44 to 5-45
    cartridge preparation, 5-43 to 5-44
    classification and types of ammunition, 5-38 to 5-40
    fuzes, 5-40 to 5-43
  components, 5-3 to 5-8
    baseplate, M9 (*see also* baseplate), 5-8, 5-8 (illus)
    bipod assembly, M190 (*see also* bipod assembly), 5-7, 5-7 (illus)
    bipod assembly, M191 (*see also* bipod assembly), 5-6, 5-6 (illus)
    cannon assembly, M298 (*see also* cannon assembly), 5-4 to 5-5, 5-5 (illus)
  operation, carrier-mounted, 5-26 to 5-38
    deflection and elevation changes (*see also* deflection and elevation changes), 5-29 to 5-30
    misfire, removal (*see also* misfire, removal), 5-30 to 5-37, 5-33 (illus)
    mortar carrier, M1064A3 (*see also* mortar carrier, M1064A3), 5-23 to 5-26, 5-23 (illus), 5-24 (illus)
    mounting mortar from a carrier- to a ground-mounted position, 5-27 to 5-28
    placing mortar into action, 5-26 to 5-27
    premount checks (*see also* premount checks), 5-26
    reciprocally laying the mortar carrier section, 5-38
    safety checks before firing (*see also* safety checks before firing), 5-28 to 5-29
    taking out of action, 5-37 to 5-38
  operation, ground-mounted, 5-8 to 5-23
    deflection and elevation changes (*see also* deflection and elevation changes), 5-12 to 5-14
    loading and firing, 5-21 to 5-22
    malfunctions (*see also* malfunctions), 5-14
    misfire, removal (*see also* misfire, removal), 5-14 to 5-20, 5-16 (illus), 5-17 (illus), 5-18 (illus), 5-20 (illus)
    placing mortar into action, 5-10 to 5-11
    premount checks (*see also* premount checks), 5-8 to 5-10

safety checks before firing (*see also* safety checks before firing), 5-11 to 5-12
taking out of action, 5-22 to 5-23
squad organization and duties (*see also* squad and section duties and organization), 5-1 to 5-2, 5-2 (illus)
tabulated data, 5-4, 5-4 (table)

A

aiming circles, M2 and M2A2, 2-5 to 2-18, 2-6 (illus), 2-7 (illus)
accessory equipment, 2-9
aiming circle cover, 2-9
backplate, 2-9
cloth cover, 2-9
instrument light, M54, 2-9
lamp holder and remover, 2-9
plumb bob, 2-9
tripod, M24, 2-9
care and maintenance, 2-18
characteristics, 2-5, 2-5 (table)
declination constant, 2-11 to 2-13
declination station, 2-11
declinating an aiming circle at a declination station, 2-11 to 2-12
declinating an aiming circle when a declination station is not available, 2-12 to 2-13, 2-13 (illus)
use of the grid-magnetic angle in a new area without a declination station, 2-12
when to declinate the aiming circle, 2-13
description, 2-5
disassembly , 2-17
measuring of the horizontal angle between two points, 2-14
orienting
by orienting angle, 2-17, 2-17 (illus)
of the 0-3200 line on a given grid azimuth, 2-15, 2-15 (illus)
of the 0-3200 line on a given magnetic azimuth, 2-15 to 2-16
of the instrument on grid north to measure grid azimuth to objects, 2-14
setup and leveling, 2-10 to 2-11
leveling screws, 2-10 (illus)
set-up distance from objects, 2-11 (table)
use, 2-6
azimuth and elevation scales, 2-8
levels, 2-8
magnetic compass needle, 2-8
notation strip, 2-8
orienting and elevating mechanisms, 2-7
telescope, 2-8
verification of the lay of the platoon, 2-16, 2-16 (illus)

aiming posts, M14 and M1A2, 2-30, 2-30 (illus)

aiming post lights, M58 and M59, 2-31, 2-31 (illus)

ammunition (*see also* United States mortars*)*, 1-3, 1-13 to 1-16
60-mm mortar, M224 (*see also* 60-mm mortar, M224)
care and handling, 3-22 to 3-23
cartridge preparation, 3-21 to 3-22
adjusting the propellant charge, 3-22
inspecting fin assemblies, 3-21
preparing to fire, 3-21
unfired cartridges, 3-22
unpacking, 3-21
classification and types of ammunition, 3-16 to 3-18
high-explosive, 3-17, 3-17 (table)
illumination, 3-17, 3-17 (table)
smoke, white phosphorus, 3-18, 3-18 (table)
training practice, 3-18, 3-18 (table)
fuzes, 3-18 to 3-21
mechanical time superquick fuze, M776, 3-20
multioption fuzes
M734, 3-19, 3-19 (illus)
M734A1, 3-20
point-detonating fuzes
M527-series, 3-20
M745, 3-20
M779, 3-20
M935, 3-19
M936, 3-20
point-detonating/delay fuze, M783, 3-20
practice fuze, M775, 3-20
time fuze, M65-series, 3-20
81-mm mortar, M252 (*see also* 81-mm mortar, M252)
care and handling, 4-25 to 4-27, 4-26 (illus)
cartridge preparation, 4-24 to 4-25
classification and types of ammunition, 4-16 to 4-21
authorized cartridges, 4-17 to 4-20
high-explosive, 4-18, 4-18 (table)
illumination, 4-19, 4-19 (table)
smoke, white phosphorus, 4-20, 4-20 (table)
training practice, 4-20, 4-20 (table)
functioning, 4-17
identification, 4-16 to 4-17
ammunition lot number, 4-17
color code, 4-17
markings on container, 4-17
markings on rounds, 4-17
fuzes, 4-21 to 4-24
dummy fuzes, 4-24
fuze wrench, 4-24
mechanical time fuzes, 4-23
M772A1, 4-23
M84, 4-23
M84A1, 4-23
multioption fuzes, 4-23
M734, 4-23 to 4-24
M734A1, 4-24
point-detonating fuzes, 4-21
M524-series, 4-21
M526-series, 4-21
M567, 4-21
M935, 4-21
proximity fuzes, 4-22 to 4-23
burst height, 4-22
care, handling, and preservation, 4-22
climatic effects, 4-22
crest clearance, 4-22
disposal precautions, 4-22
installation, 4-23
120-mm mortars, M120 and M121 (*see also* 120-mm mortars, M120 and M121)
care and handling, 5-44 to 5-45
cartridge preparation, 5-43 to 5-44
unpacking, 5-43
inspection, 5-43
preparation to fire, 5-43 to 5-44
unfired cartridges, 5-44

classification and types of ammunition, 5-38 to 5-40
high-explosive, 5-39, 5-39 (table)
illumination, , 5-39, 5-39 (table)
smoke, white phosphorus, 5-40, 5-40 (table)
training practice, 5-40, 5-40 (table)
fuzes, 5-40 to 5-43
mechanical time superquick fuze, M776, 5-41, 5-41 (illus)
resetting, 5-41
setting, 5-41
multioption fuzes
M734, 5-42, 5-42 (illus)
resetting, 5-42
setting, 5-42
M734A1, 5-42, 5-42 (illus)
point-detonating fuzes
M745, 5-43, 5-43 (illus)
M935, 5-41, 5-41 (illus)
resetting, 5-41
setting, 5-41
care and handling, 1-13 to 1-14
burning of unused propellant charges, 1-13 to 1-14
fuzes, 1-14
projectiles/cartridges, 1-13
segregation of ammunition lots, 1-14
cartridges, 1-4
care and handling, 1-13
characteristics, 1-4 (table)
color codes, 1-15, 1-15 (table)
field storage, 1-15 to 1-16, 1-16 (illus)
fuzes, 1-4
care and handling, 1-14
propellant charges, 1-4
burning unused propellant charges, 1-13 to 1-14

B

baseplate
M3A1 (*see also* 81-mm mortar, M252), 4-6, 4-6 (illus)
M7 (*see also* 60-mm mortar, M224), 3-5, 3-5 (illus)
M8 (*see also* 60-mm mortar, M224), 3-5, 3-5 (illus)
M9 (*see also* 120-mm mortars, M120 and M121), 5-8, 5-8 (illus)
bipod assembly
M170 (*see also* 60-mm mortar, M224), 3-3 to 3-4, 3-4 (illus)
collar assembly, 3-3
elevating mechanism, 3-4
left leg assembly, 3-4
locking sleeve, 3-4
fine cross-leveling nut, 3-4
right leg assembly, 3-4
shock absorbers, 3-3
spread cable, 3-4
traversing mechanism, 3-3 to 3-4
M191 (*see also* 120-mm mortars, M120 and M121), 5-6, 5-6 (illus)
M190 (*see also* 120-mm mortars, M120 and M121), 5-7, 5-7 (illus)

boresight, 2-24 to 2-30
boresight method of calibration, 2-26 to 2-28
elevation setting, 2-27
deflection setting, 2-27 to 2-28, 2-28 (illus)
removal, 2-28
calibration for deflection M2 aiming circle, 2-28 to 2-30
aiming point method, 2-29 to 2-30, 2-30 (illus)
angle method, 2-29, 2-29 (illus)
installation, 2-25
M115, 2-25 to 2-26, 2-26 (illus)
components, 2-25 to 2-26
body, 2-25
leveling bubbles, 2-25
second cross-level bubble, 2-26
telescope, 2-25
tabulated data, 2-26, 2-26 (table)
M45-series, 2-24 to 2-25, 2-25 (illus)
components, 2-24
body, 2-24
clamp assembly, 2-24
elbow telescope, 2-24
strap assemblies, 2-24
telescope clamp, 2-24
tabulated data, 2-24, 2-24 (table)
principles of operation, 2-25
sight calibration, 2-26

C

cannon assembly
M225 (*see also* 60-mm mortar, M224), 3-3, 3-3 (illus)
M253 (*see also* 81-mm mortar, M252), 4-5, 4-5 (illus)
M298 (*see also* 120-mm mortars, M120 and M121), 5-4 to 5-5, 5-5 (illus)

commander's interface (*see also* mortar fire control system), 6-3 (illus)
battery specifications, 6-9
keys, controls, and indicators, 6-2 to 6-5
battery 1 and battery 2 indicators, 6-4
blackout key, 6-4
control, alternate, and escape keys, 6-4
enter key, 6-4
function keys, 6-2, 6-3 (table)
F1 and F2 , 6-4
keyboard backlighting control, 6-4
number lock key and indicator, 6-4
mouse, 6-4
power indicator, 6-5
right, left, up, and down arrow keys, 6-4
screen brightness intensity buttons, 6-4
Windows key, 6-4
processing capabilities, 6-9

compass, M2, 2-1 to 2-5, 2-1 (illus), 2-3 (illus), 2-4 (illus)
characteristics, 2-1
description, 2-2
angle-of-sight mechanism, 2-2
azimuth scale and adjuster, 2-2
compass body assembly, 2-2
front and rear sight, 2-2
magnetic needle and lifting mechanism, 2-2
use, 2-2 to 2-5
declinating from a surveyed declination station free from magnetic attractions, 2-4 to 2-5
measuring an angle of sight or vertical angle from the horizontal, 2-4
measuring a grid azimuth, 2-4
measuring a magnetic azimuth, 2-3 to 2-4
using a field-expedient method to declinate the M2 compass, 2-5
reciprocal laying , 2-38 to 2-39

crew (*see also* United States mortars), 1-3

D

deflection and elevation changes
60-mm mortar, M224 (*see also* 60-mm mortar, M224)
large changes, 3-8 to 3-9, 3-9 (illus)
small changes, 3-8
81-mm mortar, M252 (*see also* 81-mm mortar, M252)
large changes, 4-11
small changes, 4-10 to 4-11
120-mm mortars, M120 and M121, carrier-mounted (*see also* 120-mm mortars, M120 and M121)
large changes, 5-29 to 5-30
small changes, 5-29
120-mm mortars, M120 and M121, ground-mounted (*see also* 120-mm mortars, M120 and M121)
large changes, 5-13 to 5-14
small changes, 5-12 to 5-13
ground-mounted mortar, in the gunner's examination (*see also* gunner's examination)
large changes, 9-11 to 9-13
conditions, 9-12
equipment, 9-11
procedure, 9-12
scoring, 9-12 to 9-13
small changes, 9-9 to 9-10
conditions, 9-9
equipment, 9-9
procedure, 9-9
scoring, 9-10
track-mounted mortar, M121, in the gunner's examination (*see also* gunner's examination)
small changes, 9-16 to 9-17
conditions, 9-17
equipment, 9-16
procedure, 9-17
scoring, 9-17

direct-alignment method (*see also* fire direction center, firing without), 8-10 to 8-11
mortar dismounted, 8-10
mortar mounted, 8-10 to 8-11
natural object method, 8-11

direct-lay method (*see also* fire direction center, firing without), 8-9 to 8-10
step 1: initial firing data, 8-9
step 2: referring the sight, 8-9 to 8-10
step 3: bracketing the target, 8-10
step 4: fire for effect, 8-10

dismounting the mortar
60-mm mortar, M224 (*see also* 60-mm mortar, M224), 3-15 to 3-16
81-mm mortar, M252 (*see also* 81-mm mortar, M252), 4-16

driver's display (*see also* mortar fire control system), 6-7 to 6-8, 6-7 (illus)
dimmer knob, 6-8
liquid crystal display, 6-8
toggle switch, 6-8
vehicle motion sensor, 6-8, 6-8 (illus)

E

errors in firing, reporting (*see also* loading and firing), 2-47

equipment (*see also* United States mortars), 1-3

F

fire commands (*see also* loading and firing)
execution, 2-43 to 2-45
charge, 2-45
deflection, 2-45
elevation, 2-45
method of fire, 2-43 to 2-44
at my command, 2-44
do not fire, 2-44
searching fire, 2-44
section right (left), 2-44
traversing fire, 2-44
volley fire, 2-43
mortar(s) to fire, 2-43
mortar(s) to follow, 2-43
shell and fuze, 2-43
time, 2-45
repeating and correcting, 2-46 to 2-47
initial fire command, 2-47
subsequent fire command, 2-47
sequence of transmission, 2-43 (table)
subsequent, 2-46
cease firing/check fire, 2-46
deflection, 2-46
elevation, 2-46
end of mission, 2-46

fire direction center, firing without, 8-1 to 8-17
adjustment of range (*see also* range, adjustment), 8-11 to 8-17
direct-alignment method (*see also* direct-alignment method), 8-10 to 8-11
direct-lay method (*see also* direct-lay method) , 8-9 to 8-10
fire procedures (*see also* fire procedures), 8-1 to 8-9

fire procedures (*see also* fire direction center, firing without), 8-1 to 8-9
advantages and disadvantages, 8-1
attack
deep targets, 8-8, 8-9 (illus)
example, 8-8 to 8-9
wide targets, 8-6 to 8-8, 8-7 (illus)
firing data, 8-1
fire commands, 8-3 to 8-5
normal fire commands, 8-3
direction, 8-3
elevation (range), 8-3
gunner's correction, 8-3
modified fire commands, 8-4
example, 8-5
fire control, 8-5
initial fire commands, 8-3
movement to alternate and supplementary positions, 8-5
observer corrections, 8-2
forward observer more than 100 meters from mortar position, 8-2, 8-2 (illus)
example, 8-2
forward observer within 100 meters of mortar position, 8-2
reference line, 8-6
squad conduct of fire, 8-5 to 8-6
squad use of smoke and illumination, 8-6
illumination, 8-6
smoke, 8-6

full-range training cartridge, M931 (*see also* training devices), B-1
description, B-1
procedures, B-1

G

general doctrine, 1-1 to 1-2
  effective mortar fire, 1-1
  mortar positions, 1-1 to 1-2

gunner's display (*see also* mortar fire control system), 6-7, 6-7 (illus)
  BRT and DIM keys, 6-7
  locking clamp, 6-7
  TEST key, 6-7

gunner's examination (*see also* training evaluation), 9-1 to 9-23, A-9
  preparation, 9-1 to 9-3
    DA Form 5964-R, 9-2 (illus)
    eligible personnel, 9-2
    examining board, 9-1
    general rules, 9-3
    location and date, 9-2
    methods of instruction, 9-1 to 9-3
    preparatory exercises, 9-1
    prior training, 9-1
    qualification scores, 9-2
  with the ground-mounted mortar, 9-4 to 9-14
    deflection and elevation changes (*see also* deflection and elevation changes)
      large changes, 9-11 to 9-13
        conditions, 9-12
        equipment, 9-11
        procedure, 9-12
        scoring, 9-12 to 9-13
      small changes , 9-9 to 9-10
        conditions, 9-9
        equipment, 9-9
        procedure, 9-9
        scoring, 9-10
    equipment, 9-4
    mounting of the mortar, 9-4 to 9-9
      conditions, 9-5
        120-mm only, 9-7
        all mortars, 9-5 to 9-7
      equipment and layout, 9-5
        60-mm mortar , 9-5 (illus)
        81-mm mortar , 9-6 (illus)
        120-mm mortar, 9-7 (illus)
      procedure, 9-8
      scoring, 9-8 to 9-9
    organization, 9-4, 9-4 (table)
    procedure, 9-4
    reciprocal laying, 9-13 to 9-14
      conditions, 9-13
      equipment, 9-13
      procedure, 9-13 to 9-14
      scoring, 9-14
      station setup, 9-13
    referring of the sight and realigning the aiming posts, 9-10 to 9-11
      conditions, 9-10
      equipment, 9-10
      procedure, 9-10 to 9-11
      scoring, 9-11
    subjects and credits, 9-4
  with the track-mounted mortar, M121, 9-14 to 9-23
    deflection and elevation changes (*see also* deflection and elevation changes)
      large changes, 9-19 to 9-20
        conditions, 9-19
        equipment, 9-19
        procedure, 9-19
        scoring, 9-20
      small changes, 9-16 to 9-17
        conditions, 9-17
        equipment, 9-16
        procedure, 9-17
        scoring, 9-17
    equipment, 9-14
    infantry brigade combat team mortars
      reciprocal laying , 9-22 to 9-23
        conditions, 9-22
        procedure, 9-23
        scoring, 9-23
    organization, 9-15, 9-15 (table)
    placement of mortar into a firing position from traveling position, 120-mm mortar, 9-15 to 9-16
      conditions, 9-15
      equipment, 9-15
      procedure, 9-16
      scoring, 9-16
    procedure, 9-15
    reciprocal laying, 9-20 to 9-21
      conditions, 9-20
      equipment, 9-20
      procedure, 9-20 to 9-21
      scoring, 9-21
    referring of the sight and realignment of aiming posts, 9-17 to 9-19
      conditions, 9-18
      equipment, 9-17
      procedure, 9-18
      scoring, 9-18 to 9-19
    subjects and credits, 9-14
    support squad
      reciprocal laying, 9-21 to 9-22
        conditions, 9-21
        procedure, 9-22
        scoring, 9-22

I

indirect fire team, 1-2 to 1-4, 1-2 (illus)
  applications, 1-2
  team mission, 1-2 to 1-3
  United States mortars (*see also* United States mortars*)*, 1-3 to 1-4 , 1-4 (table)

L

laying of the section, 2-32 to 2-41
  parallel sheaf, 2-32 (illus)
  placing out aiming posts, 2-39 to 2-41
    any direction fire capability, 2-39
    arm-and-hand signals, 2-40 to 2-41 (illus)
    procedures when aiming posts cannot be laid on the prescribed referred deflection, 2-39 to 2-40
    referred deflection is 2800 mils, 2-39
    referred deflection is not 2800 mils, 2-39
  reciprocal laying, 2-33 to 2-39, 2-33 (illus)
    on a grid azimuth, 2-34 to 2-36, 2-35 (illus), 2-36 (illus)
    on a magnetic azimuth, 2-36
    using the M2 compass, 2-38 to 2-39
    using the mortar sights, 2-37 to 2-38, 2-37 (illus), 2-38 (illus)
    using the orienting angle, 2-37

loading and firing, 2-42 to 2-48
  arm-and-hand signals (*see also* signals, arm-and-hand), 2-45, 2-46 (illus)
  execution of fire commands (*see also* fire commands), 2-43 to 2-45
  firing of the ground-mounted mortar, 2-42
  night firing (*see also* night firing), 2-47 to 2-48
  repeating and correcting of fire commands (*see also* fire commands), 2-46 to 2-47
  reporting of errors in firing (*see also* errors in firing, reporting), 2-47

subsequent fire commands (*see also* fire commands), 2-46
target engagement, 2-42 to 2-43

M

malfunctions
60-mm mortar, M224 (*see also* 60-mm mortar, M224), 3-10 to 3-11
cookoff, 3-11
hangfire, 3-11
misfire, 3-11
81-mm mortar, M252 (*see also* 81-mm mortar, M252), 4-12
120-mm mortars, M120 and M121, ground-mounted (120-mm mortars, M120 and M121), 5-14
short-range training round, M880 (*see also* training devices), B-13 to B-14

misfire, removal
60-mm mortar, M224 (*see also* 60-mm mortar, M224)
conventional mode, 3-11 to 3-14
handheld mode, 3-14 to 3-15
81-mm mortar, M252 (*see also* 81-mm mortar, M252), 4-12 to 4-16, 4-13 (illus), 4-14 (illus), 4-15 (illus)
120-mm mortars, M120 and M121, ground-mounted (*see also* 120-mm mortars, M120 and M121)
using a cartridge extractor, 5-14 to 5-18, 5-16 (illus), 5-17 (illus), 5-18 (illus)
using the barrel tip method, 5-18 to 5-20, 5-20 (illus)
120-mm mortars, M120 and M121, carrier-mounted (*see also* 120-mm mortars, M120 and M121)
using a cartridge extractor, 5-30 to 5-34, 5-33 (illus)
using the barrel tip method, 5-34 to 5-37

subcaliber insert, M303 (*see also* subcaliber insert), B-16
subcaliber insert , M313 (*see also* subcaliber insert), B-19

mortar carrier, M1064A3 (*see also* 120-mm mortars, M120 and M121), 5-23 to 5-26, 5-23 (illus), 5-24 (illus)
description, 5-23 to 5-24
maintenance, 5-26
mortar and vehicular mount, 5-25
tabulated data, 5-25, 5-25 (table)

mortar fire control system, 6-1 to 6-30, 6-2 (illus)
additional functions, 6-21 to 6-30
alerts function, 6-28, 6-28 (illus)
ammo/status function, 6-21 to 6-24
"Ammo Fire Unit" screen, 6-22, 6-22 (illus)
"Ammo Roll-up" screen, 6-23, 6-23 (illus)
"Status Fire Unit" screen, 6-24, 6-24 (illus)
check fire function, 6-25
plain text messages function, 6-26 to 6-27
"Read" screen, 6-26, 6-26 (illus)
"Send" screen, 6-27, 6-27 (illus)
plot function, 6-29, 6-29 (illus), 6-30 (illus)
commander's interface (*see also* commander's interface), 6-2 to 6-5, 6-3 (illus)
common actions, 6-10 to 6-11
conducting fire missions, 7-1 to 7-16
pointing device (*see also* pointing device), 7-1 to 7-4,
"Boresight" Screen, 7-4, 7-4 (illus)
"Status" screen, 7-2 to 7-3, 7-2 (illus)
fire commands, 7-10 to 7-13
end of mission, 7-13
initial fire command, 7-11, 7-11 (illus)
subsequent fire command, 7-12, 7-12 (illus)
final protective fires, 7-14 to 7-16
fire a stored final protective fire mission, 7-16, 7-16 (illus)
fire command for an assigned final protective fire, 7-14 to 7-15, 7-14 (illus), 7-15 (illus)
navigation and emplacement, 7-5 to 7-10, 7-5 (illus)
navigation to fire area, 7-9 to 7-10, 7-9 (illus), 7-10 (illus)
navigation to waypoint, 7-5 to 7-8, 7-6 (illus), 7-7 (illus), 7-8 (illus)
data initialization and system configuration, 6-12 to 6-21
"Channel A" and "Channel B" screens, 6-20 to 6-21, 6-20 (illus)
"Configuration" screen, 6-15, 6-15 (illus)
"Data" screen, 6-16, 6-16 (illus)
"Geographic Reference" screen, 6-17, 6-17 (illus)
"Mounting Azimuth and Reference" screen, 6-19, 6-19 (illus)
"Position" screen, 6-18, 6-18 (illus)
"Unit List" screen, 6-14, 6-14 (illus)
description, 6-1
driver's display (*see also* driver's display), 6-7 to 6-8, 6-7 (illus)
gunner's display (*see also* gunner's display), 6-7, 6-7 (illus)
log-in procedures, 6-12, 6-12 (illus)
pointing device (*see also* pointing device), 6-6, 6-6 (illus)
power distribution assembly (*see also* power distribution assembly), 6-5 to 6-6, 6-5 (illus)
Soldier's graphic user interface, 6-9 to 6-10, 6-11 (illus)
startup, 6-12

mortar range safety checklist (*see also* safety procedures), 1-5 to 1-7
items to check
after firing, 1-7
before firing, 1-5 to 1-7
during firing, 1-7

mount, M177 (*see also* 81-mm mortar, M252), 4-5 to 4-6, 4-5 (illus)
bipod, 4-6
elevating mechanism, 4-6
traversing mechanism, 4-6

mounting of the mortar
60-mm mortar, M224 (*see also* 60-mm mortar, M224), 3-6 to 3-7
81-mm mortar, M252 (*see also* 81-mm mortar, M252), 4-8 to 4-9, 4-9 (illus)

N

night firing (*see also* loading and firing), 2-47 to 2-48

P

pointing device (*see also* mortar fire control system), 6-6, 7-1 to 7-4, 6-6 (illus)
  "Boresight" Screen, 7-4, 7-4 (illus)
  "Status" screen, 7-2 to 7-3, 7-2 (illus)
    manually updating pointing device position fields, 7-2 to 7-3
    pointing device data precedence rules, 7-3
      after alignment, 7-3
      during alignment, 7-3
      restart, 7-3
      shut down, 7-3
    pointing device status, 7-2

power distribution assembly (*see also* mortar fire control system), 6-5 to 6-6, 6-5 (illus)
  FAULT LED indicator, 6-6
  power on switch, 6-5
  switch and LED indicator for commander's interface, 6-5
  switch and LED indicator for driver's display, 6-5
  switch and LED indicator for Global Positioning System, 6-5
  switch and LED indicator for gunner's display, 6-5
  switch and LED indicator for pointing device, 6-6
  switch and LED indicator for printer, 6-6

premount checks
  60-mm mortar, M224 (*see also* 60-mm mortar, M224), 3-6
    ammunition bearer, 3-6
    gunner, 3-6
    squad leader, 3-6
  81-mm mortar, M252 (*see also* 81-mm mortar, M252), 4-7 to 4-8
    ammunition bearer, 4-7
    assistant gunner, 4-7
    gunner, 4-7
    squad leader, 4-7
      layout of equipment, 4-8 (illus)
  120-mm mortars, M120 and M121, carrier-mounted (*see also* 120-mm mortars, M120 and M121), 5-26
  120-mm mortars, M120 and M121, ground-mounted (*see also* 120-mm mortars, M120 and M121), 5-8 to 5-10
    bipod assembly, 5-9
    M67 sightunit, 5-10
    M1100 mortar trailer, 5-10
    mortar baseplate, 5-9
    mortar cannon, 5-8 to 5-9

R

range, adjustment (*see also* fire direction center, firing without), 8-11 to 8-17
  bracketing method, 8-12 to 8-13, 8-12 (table), 8-13 (illus)
  creeping method of adjustment, 8-13
  establishment of a reference line and shifting from that line, 8-15
    example, 8-16 to 8-17, 8-16 (illus)
  ladder method of adjustment, 8-13 to 8-14, 8-14 (illus)
    example, 8-15
  spottings, 8-11 to 8-12
    deviation spottings, 8-12
    erratic spottings, 8-12
    range spottings, 8-11
      definite range spottings, 8-11
      doubtful, lost, or unobserved range spottings, 8-11

referring the sight and realigning the aiming posts
  60-mm mortar, M224 (*see also* 60-mm mortar, M224), 3-9 to 3-10
  81-mm mortar, M252 (*see also* 81-mm mortar, M252), 4-12
    example, 4-12
  in the gunner's examination (*see also* gunner's examination)
    ground-mounted mortars, 9-10 to 9-11
    track-mounted mortar, M121, 9-17 to 9-19

S

safety card (*see also* safety procedures), 1-7
  example, 1-9 (illus)

safety checks before firing
  60-mm mortar, M224 (*see also* 60-mm mortar, M224), 3-7 to 3-8
    crewman, 3-8
    gunner, 3-7
      mask and overhead clearance, 3-7 to 3-8
  81-mm mortar, M252 (*see also* 81-mm mortar, M252), 4-10
    ammunition bearer, 4-10
    assistant gunner, 4-10
    gunner, 4-10
      mask and overhead clearance, 4-10
  120-mm mortars, M120 and M121, ground-mounted (*see also* 120-mm mortars, M120 and M121), 5-11 to 5-12
  120-mm mortars, M120 and M121, carrier-mounted (*see also* 120-mm mortars, M120 and M121), 5-28 to 5-29
    mask and overhead clearance, 5-28 to 5-29

safety diagram (*see also* safety "T"), 1-8 to 1-11
  example, 1-9 to 1-11
    for M821 HE, 1-11 (illus)
    for M853A1 ILLUM, 1-11 (illus)

safety procedures, 1-5 to 1-13
  duties of safety officer and supervisory personnel, 1-5 to 1-7
    before departing for range, 1-5
    mortar range safety checklist, 1-5 to 1-7
      items to check
        after firing, 1-7
        before firing, 1-5 to 1-7
        during firing, 1-7
    safety card, 1-7

safety "T" (*see also* safety diagram), 1-8 to 1-11
example, 1-9 to 1-11
for M821 HE, 1-11 (illus)
for M853A1 ILLUM, 1-11 (illus)

short-range training round, M880, B-2 to B-14, B-4 (illus)
advantages, B-2
characteristics, B-2
clean and service round, B-6 to B-7
components, B-3
fuze M775, B-4
projectile body, B-4
defuze a dud M880 round, B-8 to B-9
malfunctions and removal of misfire, B-13 to B-14
parts, B-9, B-9 (table)
preparation, B-5
range, B-2 to B-3, B-3 (illus)
recovery procedures, B-7 to B-8
refurbish round, B-6
safety, B-13
scaled map, construction, B-9 to B-13, B-10 (illus), B-11 (illus), B-12 (illus), B-13 (illus)
training, B-2
training considerations, B-9

sightunit , 2-18 to 2-24
care and maintenance, 2-23
M64-series, 2-19 to 2-21, 2-20 (illus)
illumination, 2-20
major components, 2-19 to 2-20
dovetail, 2-19
locking knobs, 2-19
micrometer knobs, 2-19
scales, 2-20
tabulated data, 2-21, 2-21 (table)
M67, 2-18 to 2-19, 2-18 (illus)
equipment data, 2-19, 2-19 (table)
major components, 2-18 to 2-19
elbow telescope, 2-19
telescope mount, 2-19
operation, 2-21 to 2-22
attaching the sightunit, 2-21
correct sight picture, 2-22
laying for direction, 2-22
placing the sightunit into operation, 2-21
setting the deflection, 2-21
setting the elevation, 2-22
replacing the sightunit in the carrying case, 2-22
radioactive tritium gas, 2-23
identification, 2-23
storage and shipping, 2-24
warning label, 2-23 (illus)

signals, arm-and-hand (*see also* loading and firing), 2-45 to 2-46, 2-46 (illus)
cease firing, 2-45
fire, 2-45
ready, 2-45

subcaliber insert
M303 (*see also* training devices), B-14 to B-16, B-14 (illus)
characteristics, B-14
maintenance, B-15 to B-16
misfire procedures, B-16
M313 (*see also* training devices), B-16 to B-19, B-16 (illus)
assembly, B-17
characteristics, B-16 to B-17
maintenance, B-17 to B-19
minimum and maximum range, B-17
misfire procedures, B-19

surface danger zones, 1-12 to 1-13
components, 1-12 to 1-13
area A, 1-12
area B, 1-13
buffer zones, 1-12
firing position, 1-12
impact area, 1-12
dispersion area, 1-12
target area, 1-12
construction, 1-13

squad and section duties and organization
60-mm mortar, M224 (*see also* 60-mm mortar, M224)
duties, 3-1
ammunition bearer, 3-1
gunner, 3-1
squad leader, 3-1
organization, 3-1
81-mm mortar, M252 (*see also* 81-mm mortar, M252)
duties, 4-1
ammunition bearer, 4-1
assistant gunner, 4-1
gunner, 4-1
squad leader, 4-1
organization, 4-1
positions, 4-2 (illus)
120-mm mortars, M120 and M121 (*see also* 120-mm mortars, M120 and M121)
duties, 5-1 to 5-2
ammunition bearer, 5-2
assistant gunner, 5-1
gunner, 5-1
squad leader, 5-1
organization, 5-1
positions, 5-2 (illus)

T

target engagement, 2-42 to 2-43, 2-43 (table)

training, A-1to A-10
at training base (*see also* training, at training base), A-1 to A-2
example annual mortar training programs, A-7 to A-8, A-7 (illus), A-8 (illus)
in units (*see also* training, in units), A-3 to A-8
philosophy, A-1
training evaluation (*see also* training evaluation), A-9 to A-10
unit mortar training, A-1

training, at training base (*see also* training), A-1 to A-2
Basic Noncommissioned Officer Course (11C), A-2
Infantry Basic Officer Leader's Course, A-2
Infantry Career Captain Course, A-2
Infantry Mortar Leader Course, A-2
Maneuver Advanced Noncommissioned Officer Course, A-2
One-Station Unit Training (11C), A-2
Pre-Command Course, A-2

training, in units (*see also* training), A-3 to A-8
collective training, A-5 to A-7
collective training resources, A-6 to A-7
battalion-level training model, A-6 to A-7
drill books, A-6
mission training plan,A-6
section and platoon training, A-6
squad training, A-5 to A-6
cross training, A-5

example annual mortar training programs, A-7 to A-8, A-7 (illus), A-8 (illus)
training plan development, A-3
integrated training strategy, A-4, A-4 (illus)
common tasks, A-5
MOS 11C tasks, A-5
Army Correspondence Course Program, A-5
training extension courses, A-5
mission-essential task list tasks, A-3
initial training, A-3 to A-4
sustainment training, A-4

training devices, B-1 to B-19
full-range training cartridge, M931 (*see also* full-range training cartridge, M931), B-1
short-range training round, M880 (*see also* short-range training round, M880), B-2 to B-14, B-4 (illus)
subcaliber insert, M303 (*see also* subcaliber insert) B-14 to B-15, B-14 (illus)
subcaliber insert, M313 (see also subcaliber insert) B-16 to B-19, B-16 (illus)

training evaluation (*see also* training), A-9 to A-10
collective training, A-9 to A-10
Army Training and Evaluation program, A-9
evaluation of the indirect fire team, A-10
external evaluation, A-10
individual training, A-9
commander's evaluation, A-9
fire direction center certification, A-9
gunner's examination (see also gunner's examination), A-9
Warrior task list, A-9

U

United States mortars, 1-3 to 1-4, 1-4 (table)
ammunition, 1-3
cartridges, 1-4
fuzes, 1-4
propellant charges, 1-4
crew, 1-3
equipment, 1-3

This page intentionally left blank.

GUNNER'S EXAMINATION SCORECARD - MORTARS

For use of this form, see FM 3-22.90, the proponent agency is TRADOC.

1 MORTARS *(CHECK ONE)*
- ☐ Ground Mounted
- ☐ Carrier-Mounted
- ☐ Support Squad

DATA REQUIRED BY THE PRIVACY ACT OF 1974

Authority	10 USC 3012 (g), Executive Order 9397.
Principal Purpose	Evaluates individual's training on mortars.
Routine Uses	Evaluate individual proficiency; SSN is used for positive identification purposes only.
Disclosure	Disclosure of this information is voluntary. However, individuals not providing information cannot be rated/scored on a mass basis.

2 ORGANIZATION	3 DATE	
4 NAME *(Last, first, MI)*	5 GRADE	6 SSN

7 CHECK ONE

☐ M224 ☐ M29A1 ☐ M252 ☐ M30 ☐ XM120

ITEMS	TRIAL a	TIME b	TRIAL SCORE c	CREDIT SCORE d	INITIALS e
8. Ground-Mounting the mortar carrier and support. Placing the mortar in firing position from traveling position.	1st Trial				
	2d Trial				
9. All - Small deflection change.	1st Trial				
	2d Trial				
10. Ground and Carrier - Referring the sight and realigning aiming posts. Support direct laying.	1st Trial				
	2d Trial				
11. All - Large deflection and elevation change	1st Trial				
	2d Trial				
12. Ground and Carrier - Reciprocal laying. Support - Laying by compass.	1st Trial				
	2d Trial				
13. **TOTAL CREDIT SCORE**					

EXPERT GUNNER	90 to 100
FIRST-CLASS GUNNER	80 to 89
SECOND-CLASS GUNNER	70 to 79
UNQUALIFIED	69 or LESS

14 **VERIFIED BY**	
a PRINTED/TYPED NAME	d UNIT
b SIGNATURE	
c GRADE	e DATE

☆ U.S. GOVERNMENT PRINTING OFFICE: 1990 – 527-027 20089

FM 3-22.90
7 December 2007

By Order of the Secretary of the Army:

GEORGE W. CASEY, JR.
General, United States Army
Chief of Staff

Official:

JOYCE E. MORROW
Administrative Assistant to the
Secretary of the Army
0732005

DISTRIBUTION: Active Army, Army National Guard, and U.S. Army Reserve: To be distributed in accordance with the initial distribution number (IDN) 110209 requirements for FM 3-22.90.

PIN: 082039-000